REVISED : 2-10-72

FED. ROAD DIST. NO.	STATE	FED. AID PROJ. NO.	FISCAL YEAR	SHEET NO.	TOTAL SHEETS
HAWAII	HAW.	RF-056-1(10)	1971	37	74

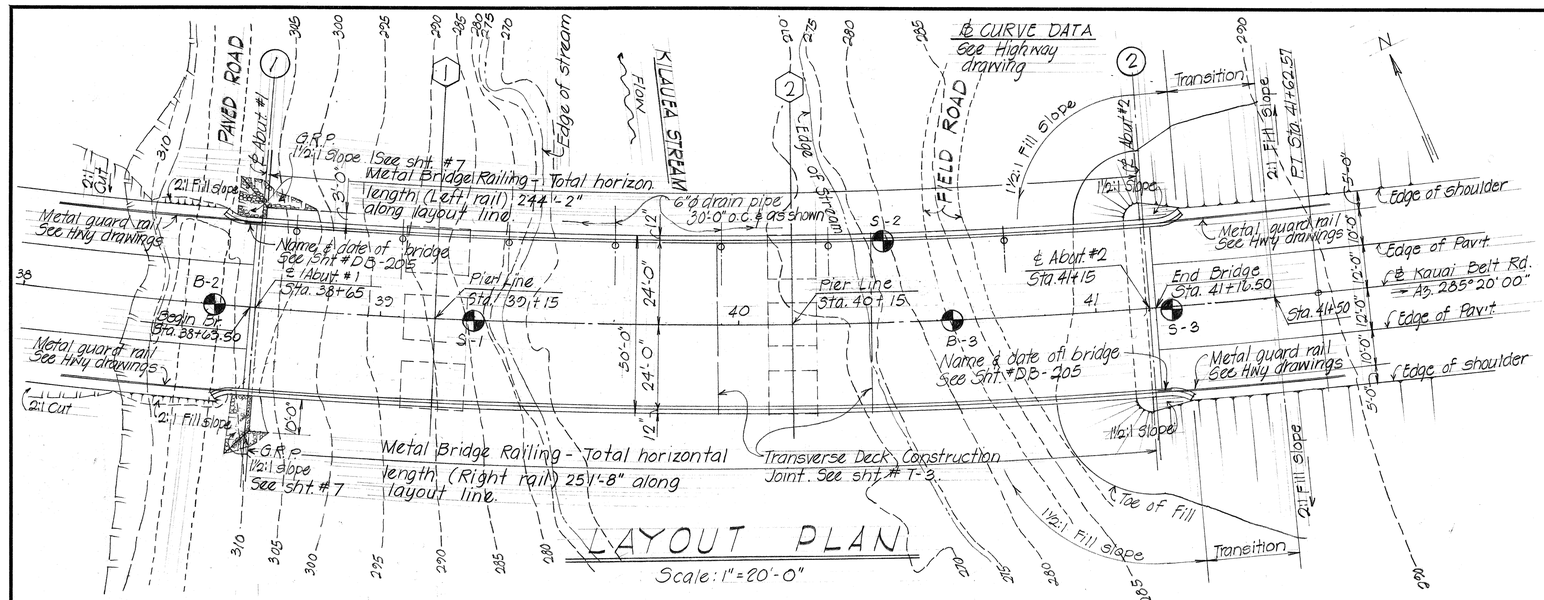

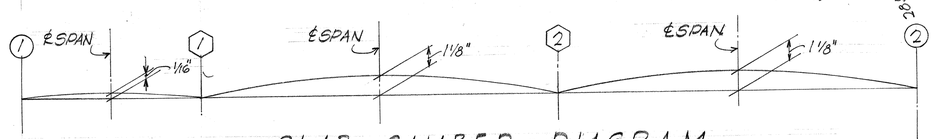

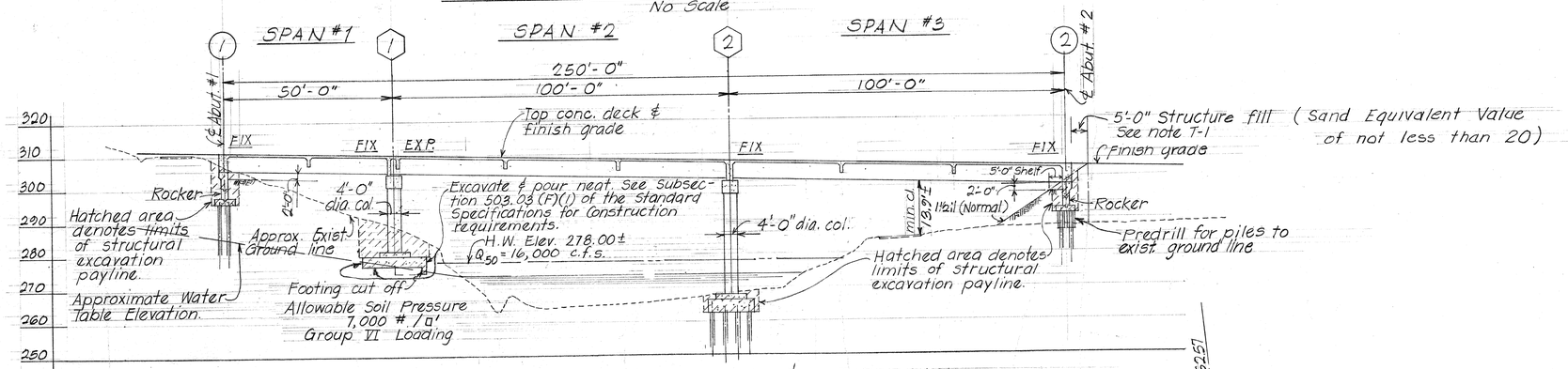

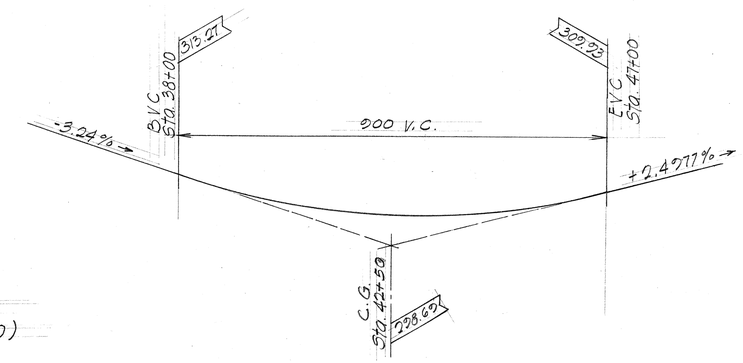

ESTIMATED QUANTITIES

Concrete - Footing	(220)	Lump Sum
Concrete - All Others	(569)	Lump Sum
Reinforcing Steel	(219,800)	Lump Sum
Prestressed Girder Type IV	(2,003)	Lump Sum
Furnishing - Type I Prestressed Conc. Piles	4,086	Lin. Ft.
Driving Concrete Piles	2,797.7 ~~3,866~~	Lin. Ft.
~~Predrill for Piles~~	~~70~~	~~Lin. Ft.~~
Metal Bridge Railing (One Rail Traffic Type)	495 ~~496~~	Lin. Ft.
Concrete Bridge Railing & End Post	539.9 ~~550~~	Lin. Ft.
Structure Excavation for Bridges	374.7 ~~382~~	Cu. Yd.
Structure Backfill For Abut. & Wing Walls	310.9 ~~382~~	Cu. Yd.
Structure Excavation For Bridge Piers *	321.5 ~~665~~	Cu. Yd
Filter Material	17.7 ~~25~~	Cu. Yd
G.R.P.	9.9 ~~11~~	Cu. Yd

* Structure Backfill for Bridge Piers incidental to Structure Excavation for Bridge Piers.

NOTES: For Design Notes, General Notes, Symbols and Abbreviations, refer to Sht. # T-1

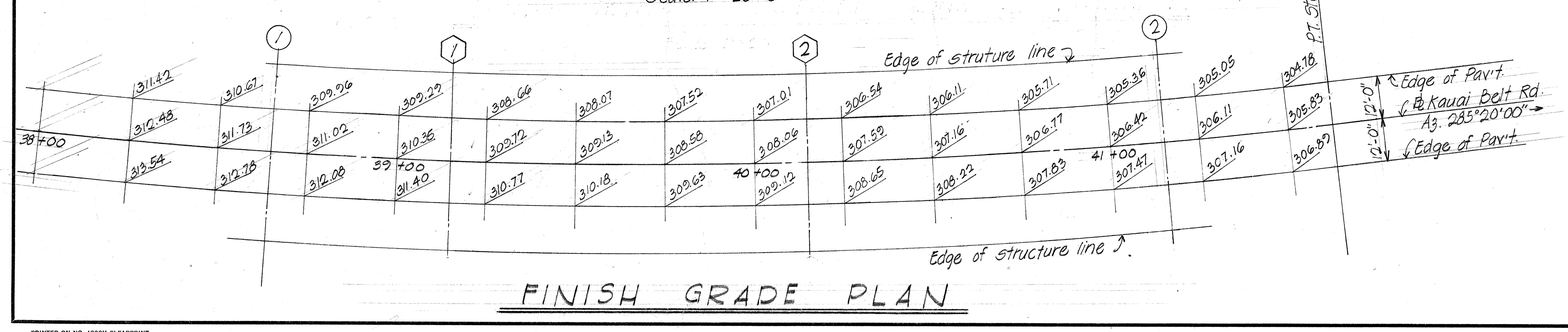

ORIGINAL PLAN	SURVEY PLOTTED BY	DATE
	DRAWN BY G.T.	
	TRACED BY	
NOTE BOOK	DESIGNED BY D.O.	
	QUANTITIES BY G.T. & F.M.	
No.	CHECKED BY J.O. & F.M.	

STATE OF HAWAII
DEPARTMENT OF TRANSPORTATION
HIGHWAYS DIVISION

KILAUEA STREAM BRIDGE

STA. 38+63.50 TO STA. 41+16.50

LAYOUT PLAN & SECTION

Proj. No. RF-056-1(10) Apr. 1971

SHEET No. 1 OF 11 SHEETS

37

PRINTED ON NO. 1000H CLEARPRINT

F-056-1 (9)

FED. ROAD DIST. NO.	STATE	FED. AID PROJ. NO.	FISCAL YEAR	SHEET NO.	TOTAL SHEETS
HAWAII	HAW.	RF-056-1(10)	1971	38	74

NOTE:
Place short dimension of column footings & concrete pedestal parallel with corresponding pier line numbers (1) or (2).

SYMBOLS:
- Denotes type I prestressed concrete piles.
- Denotes piles to be predrilled to existing ground line.

Pile bearing capacity - 70 Tons.

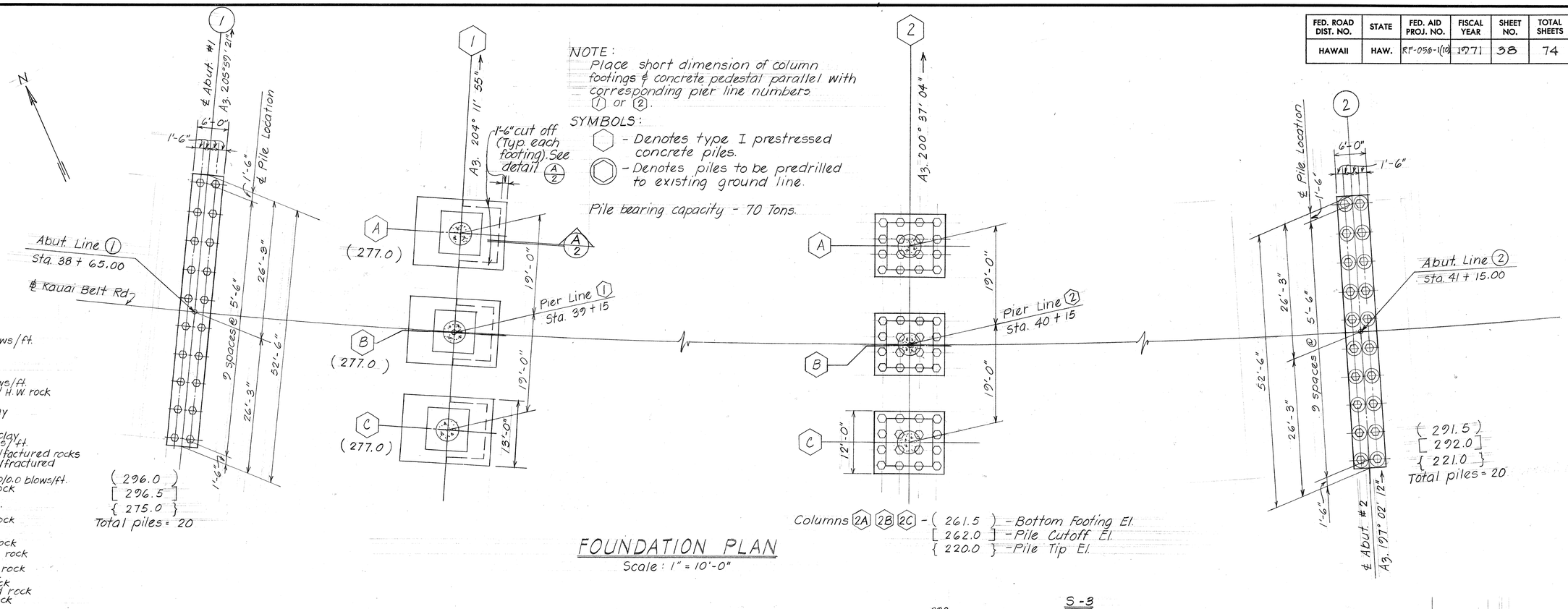

Columns (2A) (2B) (2C) - (261.5) - Bottom Footing El.
[262.0] - Pile Cutoff El.
{ 220.0 } - Pile Tip El.

FOUNDATION PLAN
Scale: 1" = 10'-0"

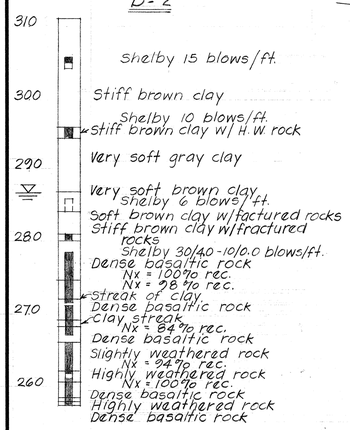

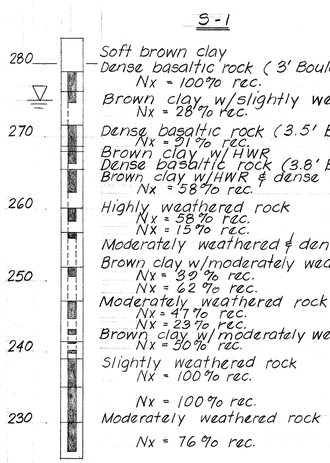

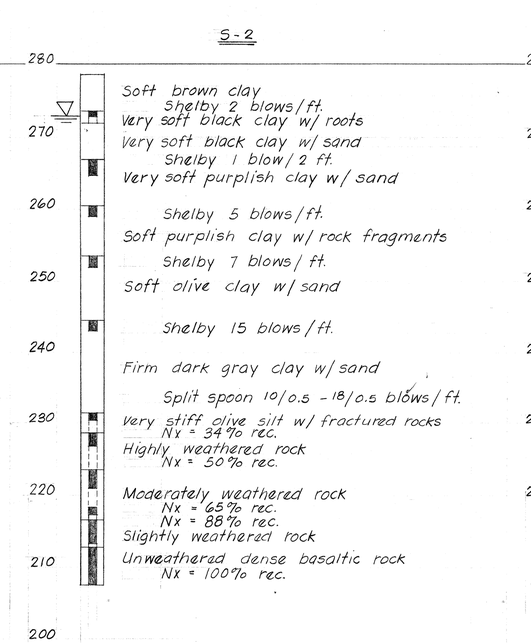

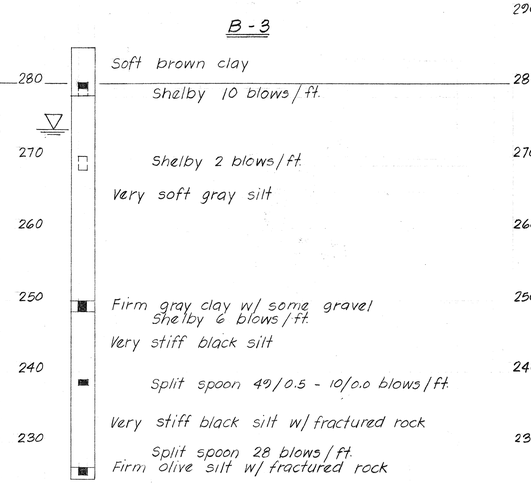

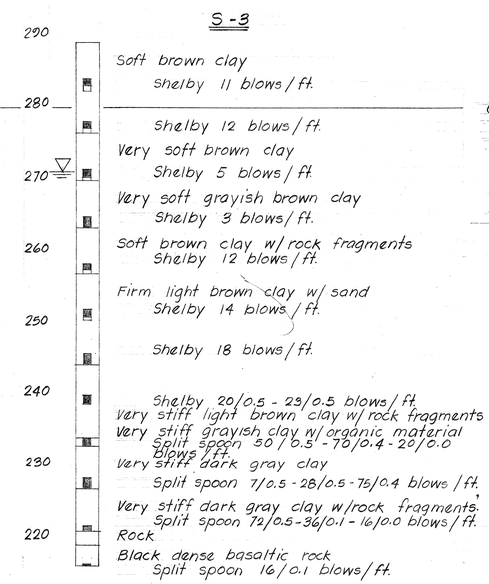

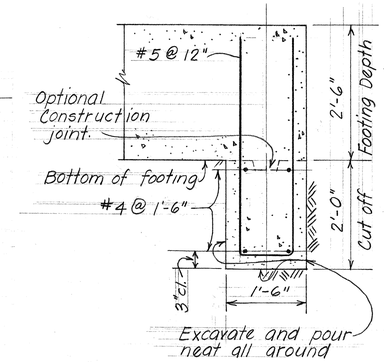

TYPICAL CUT OFF SECTION (A/2)

STATE OF HAWAII
DEPARTMENT OF TRANSPORTATION
HIGHWAYS DIVISION

KILAUEA STREAM BRIDGE
FOUNDATION PLAN & BORINGS

Proj. No. RF-056-1(10) Apr. 1971

SHEET No. 2 OF 11 SHEETS

ORIGINAL PLAN		DATE
	SURVEY PLOTTED BY	
	TRACED BY	
NOTE BOOK	DESIGNED BY	D.L.C.
	QUANTITIES BY	D.L.C. & T.M.
No.	CHECKED BY	D.L.C. & P.Y.

PRINTED ON NO. 1000H CLEARPRINT

FED. ROAD DIST. NO.	STATE	FED. AID PROJ. NO.	FISCAL YEAR	SHEET NO.	TOTAL SHEETS
HAWAII	HAW.	RF-056-1(10)	1971	39	74

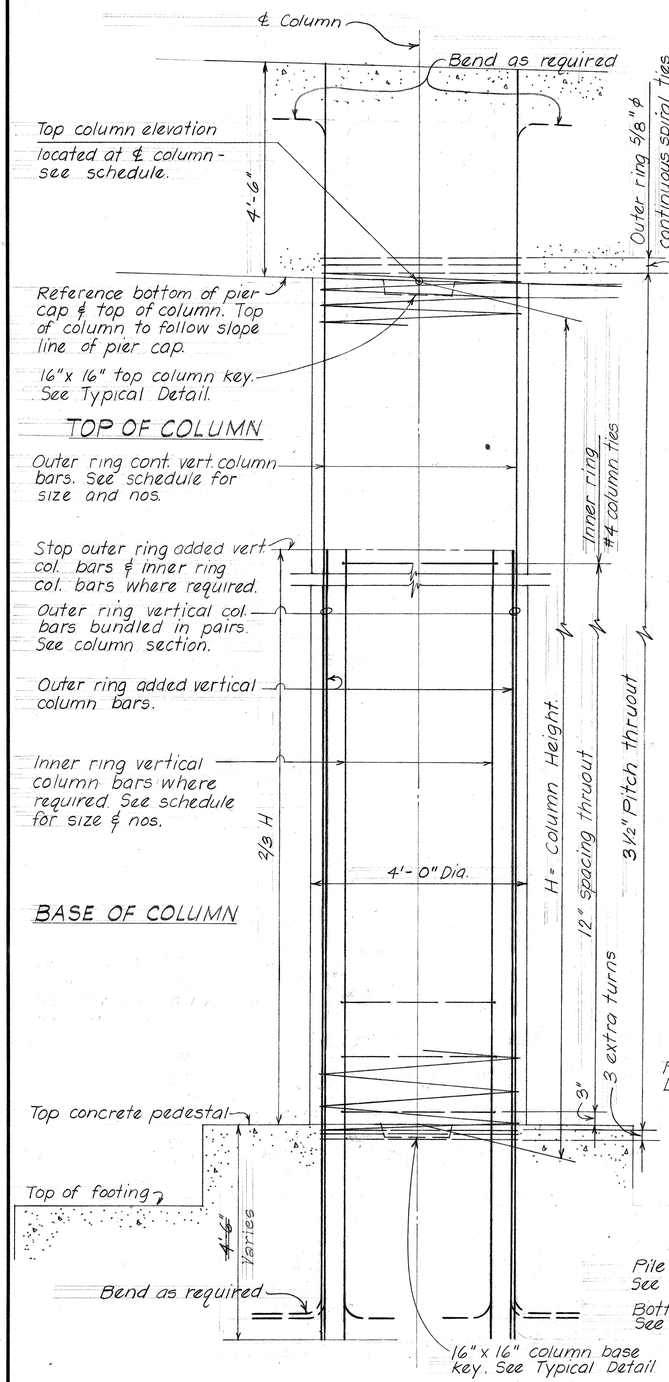

TYPICAL COLUMN DETAIL No Scale

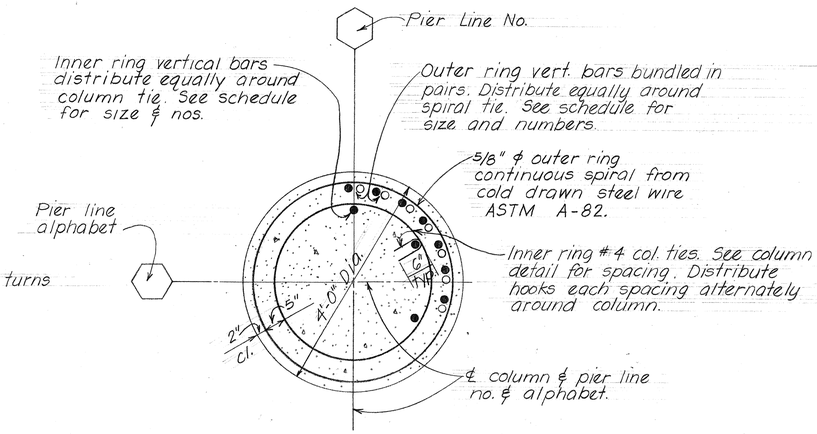

TYPICAL COLUMN SECTION

Scale : 3/4" = 1'-0"

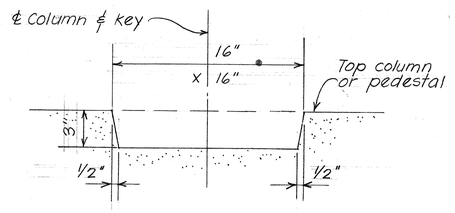

TYPICAL COLUMN KEY DETAIL

PILE COLUMN SCHEDULE

Location \ Column No.		1A	1B	1C	2A	2B	2C
Reference - Top Column Elevation		298.50	300.18	301.85	296.47	298.14	299.81
Class E-1 Concrete	Top Column	48" diameter {15 cont. 30-#14 O.R. {15 added	34-#14 O.R. {17 cont. {17 added	34-#14 O.R. {17 cont. {17 added	32-#14 O.R. {16 cont. {16 added	42-#14 O.R. {21 cont. {21 added 6-#14 I.R.	42-#14 O.R. {21 cont. {21 added
Class E-1 Concrete	Top Pedestal						
Class A-1 Concrete	Plain Concrete Pedestal — Size	8'-0"x 8'-0"	8'-0"x 8'-0"	8'-0"x 8'-0"	9'-0"x 9'-0"	9'-0"x 9'-0"	9'-0"x 9'-0"
Class A-1 Concrete	Plain Concrete Pedestal — Depth	1'-6"	1'-6"	1'-6"	1'-6"	1'-6"	1'-6"
Class A-1 Concrete	Footing Type	F1	F1	F1	PF1	PF1	PF1

NOTE: All vertical column reinforcement to be ASTM A-615 Grade 60 reinforcing bars.

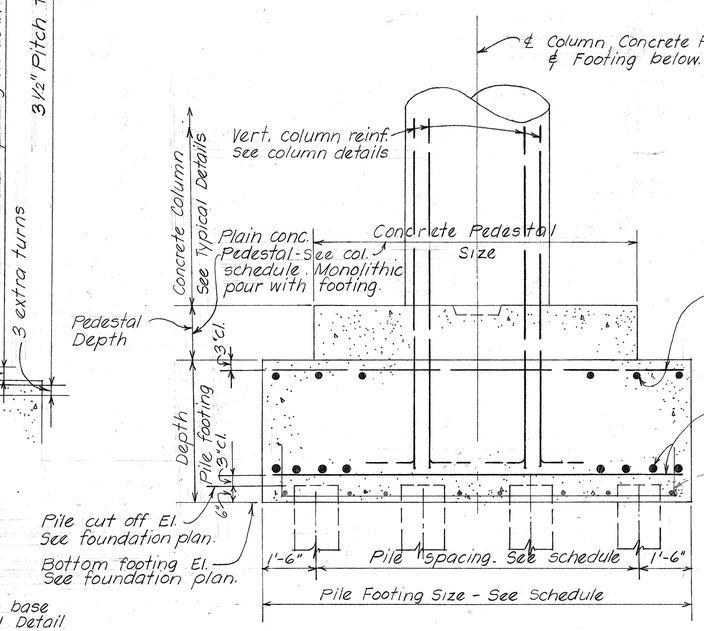

AT PILE FOOTING (PF1)

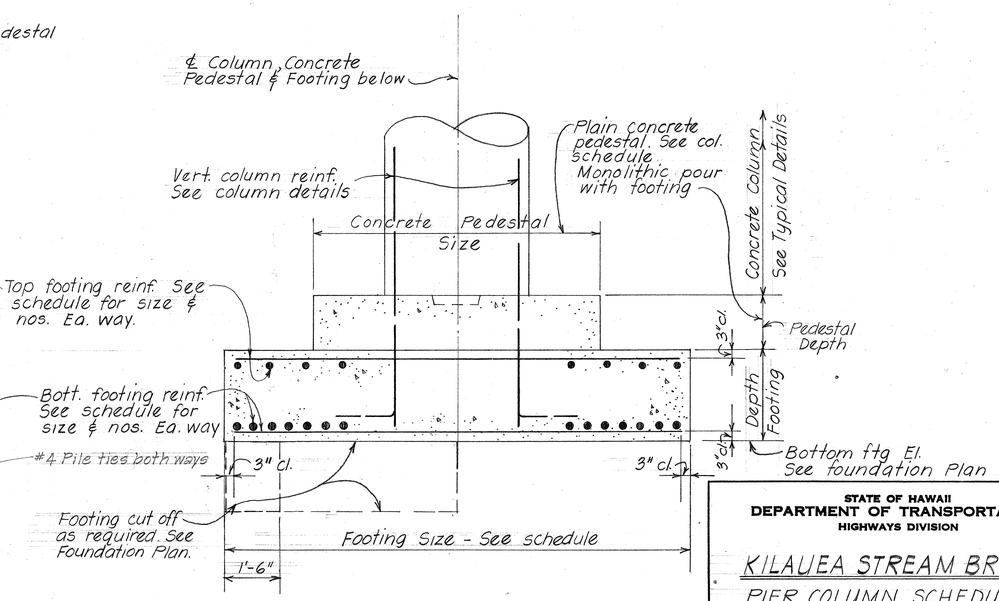

AT SPREAD FOOTING (F1)

TYPICAL PIER COLUMN FOUNDATION DETAILS

STATE OF HAWAII
DEPARTMENT OF TRANSPORTATION
HIGHWAYS DIVISION

KILAUEA STREAM BRIDGE

PIER COLUMN SCHEDULE & DETAILS

Proj. No. RF-056-1(10) Apr. 1971

SHEET No. 3 OF 11 SHEETS

ORIGINAL PLAN	SURVEY PLOTTED BY	DATE
	DRAWN BY	
	TRACED BY	
NOTE BOOK	DESIGNED BY D.O.	
	QUANTITIES BY D.T. & T.M.	
No.	CHECKED BY T.O. & F.P.	

PRINTED ON NO. 1000H CLEARPRINT

39

FED. ROAD DIST. NO.	STATE	FED. AID PROJ. NO.	FISCAL YEAR	SHEET NO.	TOTAL SHEETS
HAWAII	HAW.	RF-056-1(10)	1971	40	74

PILE FOOTING SCHEDULE

MARK	DESCRIPTION	DEPTH	TOP REINFORCEMENT LONG WAY	TOP REINFORCEMENT SHORT WAY	BOTTOM REINFORCEMENT LONG WAY	BOTTOM REINFORCEMENT SHORT WAY
PF1	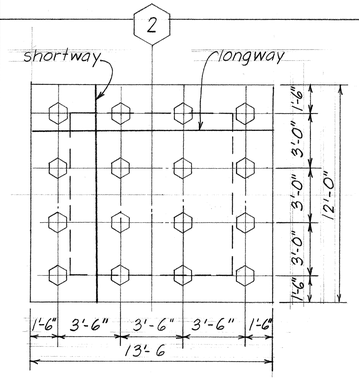	4'-0"	9-#5	10-#4	17-#10	17-#10

SPREAD FOOTING SCHEDULE

TYPE	SIZE	DEPTH	BOTTOM REINF. LONGWAY	BOTTOM REINF. SHORTWAY	TOP REINF. LONGWAY	TOP REINF. SHORTWAY
F1	13'-0"x17'-6"	2'-6"	33-#10	25-#10	15-#6	13-#4

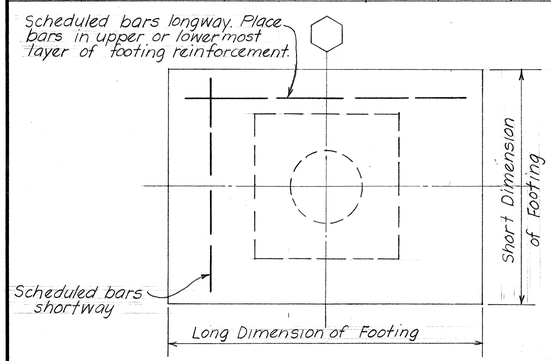

PLAN - TYPICAL ARRANGEMENT FOOTING REINFORCEMENT

ORIGINAL PLAN	SURVEY PLOTTED BY	DATE
	DRAWN BY L.A.	
	TRACED BY	
NOTE BOOK	DESIGNED BY D.O.	
	QUANTITIES BY G.F.T.M.	
No.	CHECKED BY F.H.L.O.	

STATE OF HAWAII
DEPARTMENT OF TRANSPORTATION
HIGHWAYS DIVISION

KILAUEA STREAM BRIDGE

SCHEDULES & DETAILS

Proj. No. RF-056-1(10) Apr. 1971

SHEET No. 4 OF 11 SHEETS

FED. ROAD DIST. NO.	STATE	FED. AID PROJ. NO.	FISCAL YEAR	SHEET NO.	TOTAL SHEETS
HAWAII	HAW.	RF-056-1(10)	1971	41	74

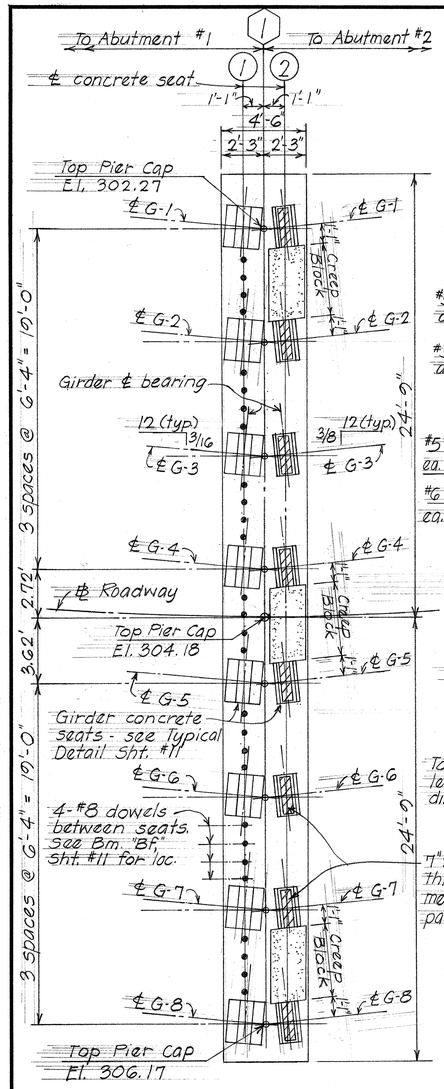

PLAN - PIER LINE (1)
Scale: 1/4" = 1'-0"

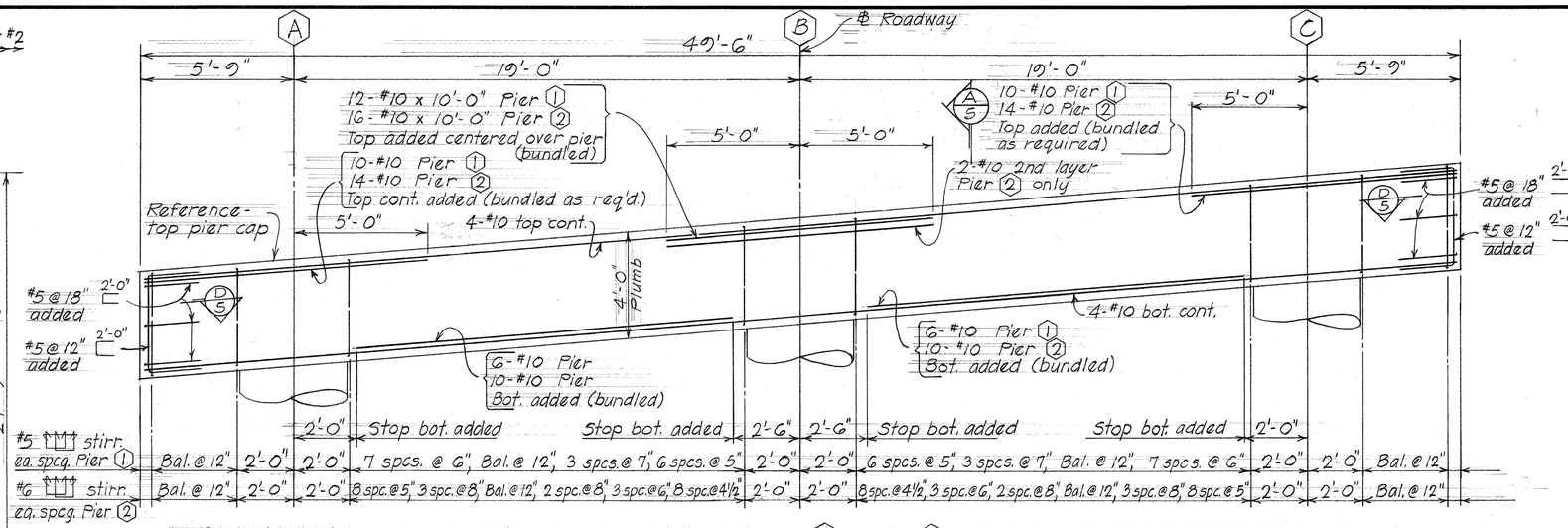

ELEVATION - TYPICAL PIER CAP LINE (1) OR (2) REINFORCEMENT DETAILS
Scale: 3/8" = 1'-0"

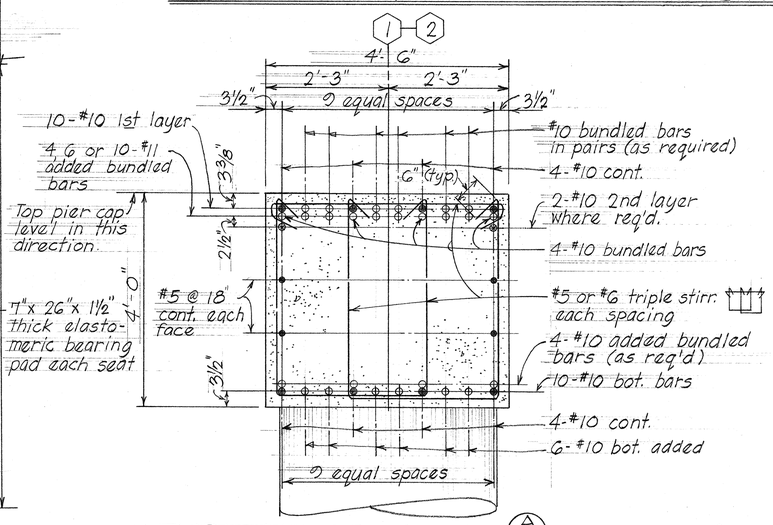

TYPICAL SECTION (A/5)
Scale: 3/4" = 1'-0"

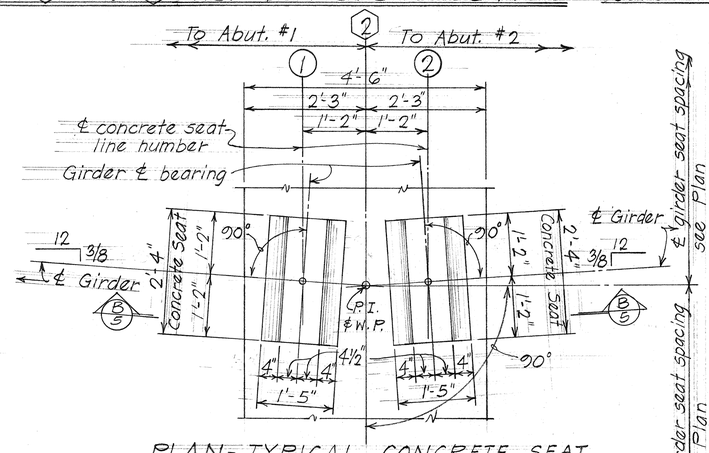

PLAN - TYPICAL CONCRETE SEAT
PIER LINE (2)
Scale: 3/4" = 1'-0"

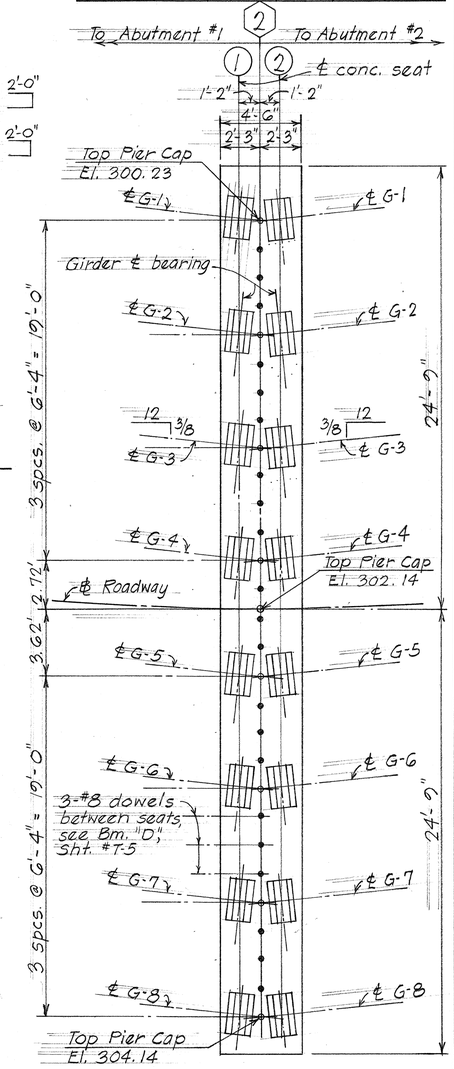

PLAN - PIER LINE (2)
Scale: 1/4" = 1'-0"

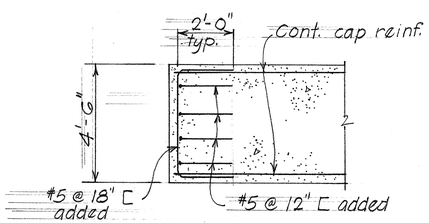

SECTION (D/5)
Scale: 3/8" = 1'-0"

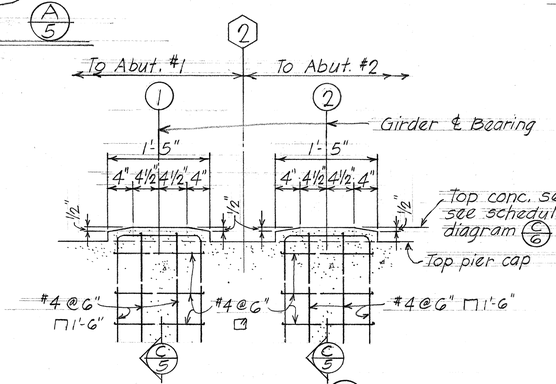

SECTION (B/5)
(TYPICAL CONCRETE SEAT) Scale: 1" = 1'-0"

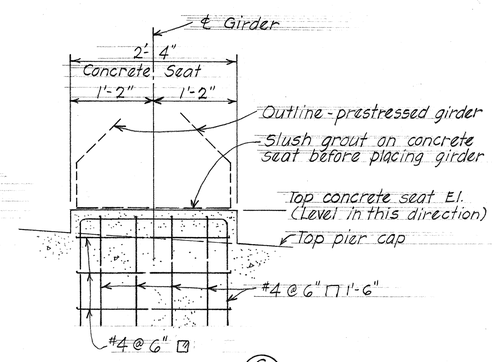

SECTION (C/5)
Scale: 1" = 1'-0"

STATE OF HAWAII
DEPARTMENT OF TRANSPORTATION
HIGHWAYS DIVISION

KILAUEA STREAM BRIDGE
PIER CAP (1), (2) DETAILS

Proj. No. RF-056-1(10) Apr. 1971

SHEET No. 5 OF 11 SHEETS

ORIGINAL PLAN	SURVEY PLOTTED BY	DATE
	TRACED BY	
	DESIGNED BY	
NOTE BOOK	QUANTITIES BY	
No.	CHECKED BY	

PRINTED ON NO. 1000H CLEARPRINT

4 1

FED. ROAD DIST. NO.	STATE	FED. AID PROJ. NO.	FISCAL YEAR	SHEET NO.	TOTAL SHEETS
HAWAII	HAW.	RF-056-1(10)	1971	42	74

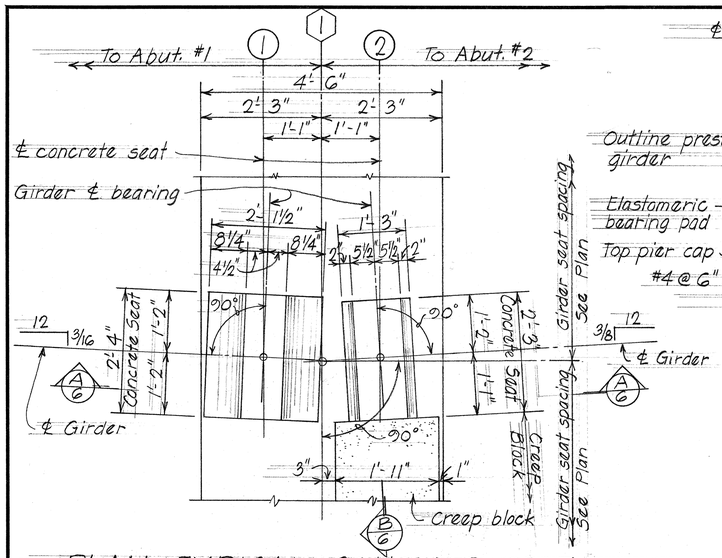

PLAN - TYPICAL CONCRETE SEAT
PIER LINE 1
Scale: 3/4" = 1'-0"

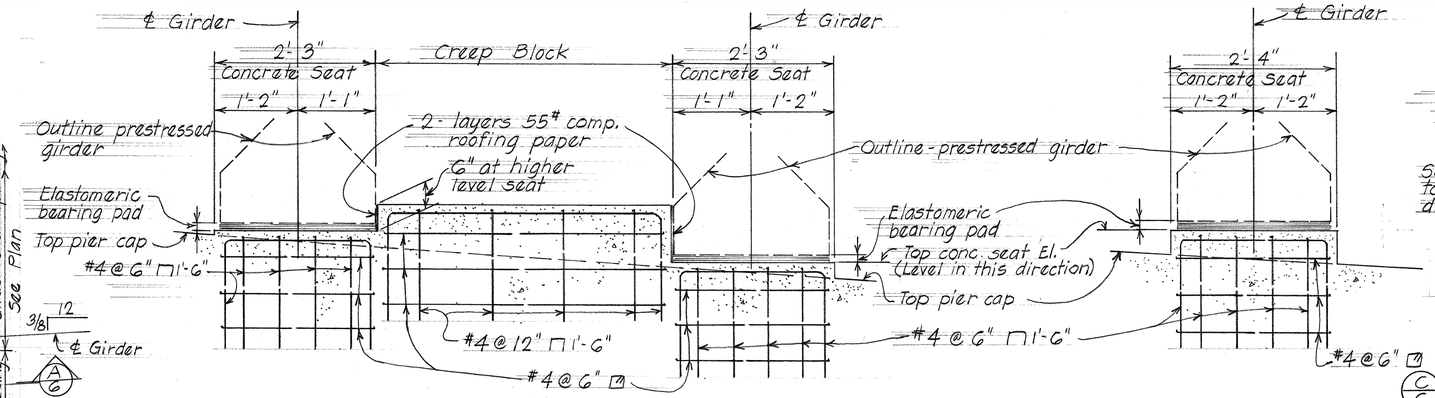

AT CREEP BLOCK

TYPICAL SECTION B/6
Scale: 1" = 1'-0"

TYPICAL

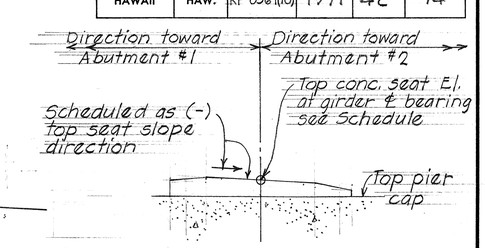

NOTE: Top seat slope direction normal to girder ℄ bearing

C/6 DIAGRAM - VARIOUS CONDITIONS OF TOP CONCRETE SEAT SLOPE & DESIGNATION

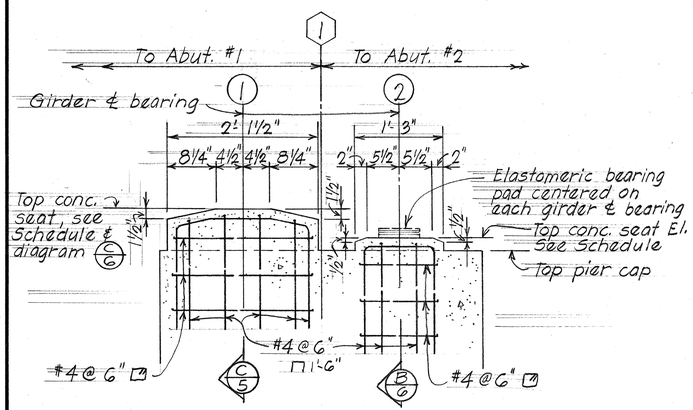

SECTION A/6
Scale: 1" = 1'-0"

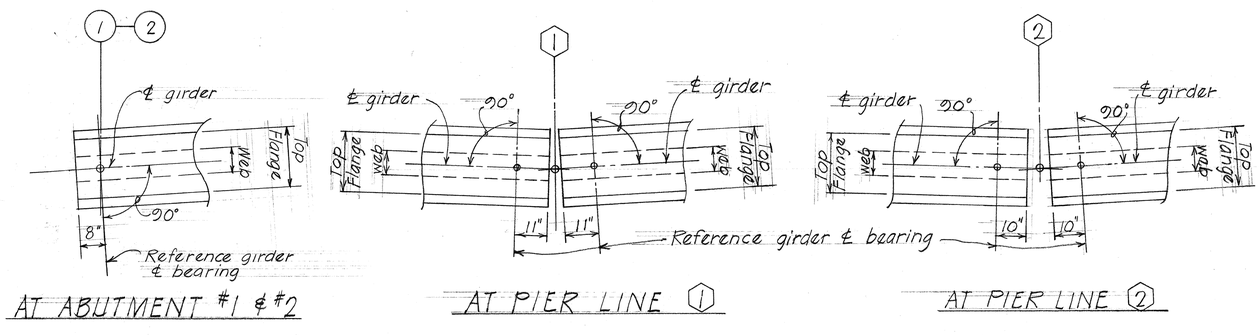

AT ABUTMENT #1 & #2 — AT PIER LINE 1 — AT PIER LINE 2

DIAGRAM - TYPICAL GIRDER END DETAIL AT VARIOUS LOCATIONS
Scale: 1/2" = 1'-0"

TOP GIRDER CONCRETE SEAT ELEVATION AND SLOPE SCHEDULE
(AT GIRDER ℄ BEARING) see sht. #

	ABUT. #1		DIRECTION TOP SEAT SLOPE		1	2		DIRECTION TOP SEAT SLOPE		2			DIRECTION TOP SEAT SLOPE		ABUT #2
	1				1	2				1	2				2
G1	304.14	(–)	5/16 : 12	(–)	302.83	302.45	(–)	1/4 : 12	(–)	300.43	300.42	(–)	3/16 : 12	(–)	298.89
G2	304.69				303.39	303.01				300.99	300.98				299.45
G3	305.25				303.94	303.57				301.55	301.54				300.01
G4	305.81				304.50	304.13				302.11	302.09				300.57
G5	306.37				305.06	304.68				302.66	302.65				301.13
G6	306.92				305.62	305.24				303.22	303.21				301.68
G7	307.48				306.17	305.80				303.78	303.77				302.24
G8	308.04	(–)	5/16 : 12	(–)	306.73	306.36	(–)	1/4 : 12	(–)	304.34	304.32	(–)	3/16 : 12	(–)	302.80

STATE OF HAWAII
DEPARTMENT OF TRANSPORTATION
HIGHWAYS DIVISION

KILAUEA STREAM BRIDGE
PIER CAP 1, 2 DETAILS

Proj. No. RF-056-1(10) Apr. 1971

SHEET No. 6 OF 11 SHEETS

ORIGINAL PLAN	SURVEY PLOTTED BY	DATE
	DRAWN BY N.Y.	"
	TRACED BY	"
	DESIGNED BY D.O.	"
NOTE BOOK	QUANTITIES BY	"
No.	CHECKED BY D.T.S. & Q.O.	"

PRINTED ON NO. 1000H CLEARPRINT

42 / 62

FED. ROAD DIST. NO.	STATE	FED. AID PROJ. NO.	FISCAL YEAR	SHEET NO.	TOTAL SHEETS
HAWAII	HAW.	RF-056-1(10)	1971	43	74

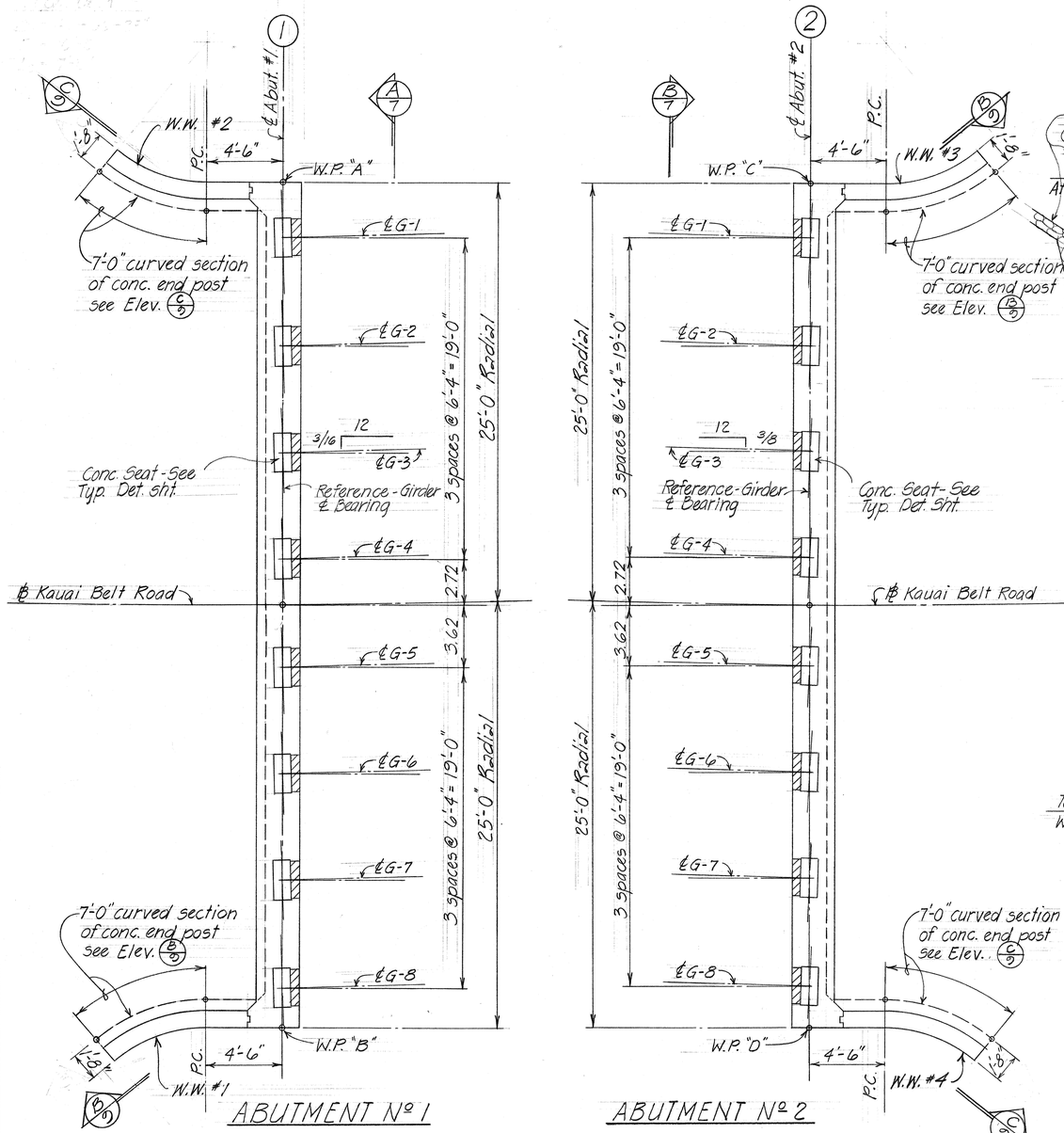

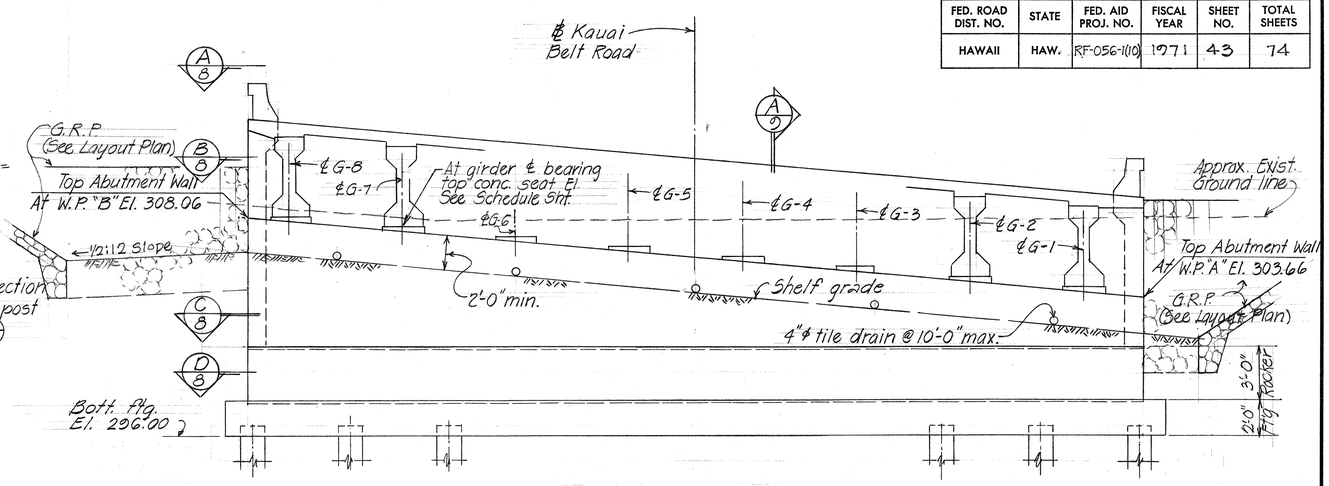

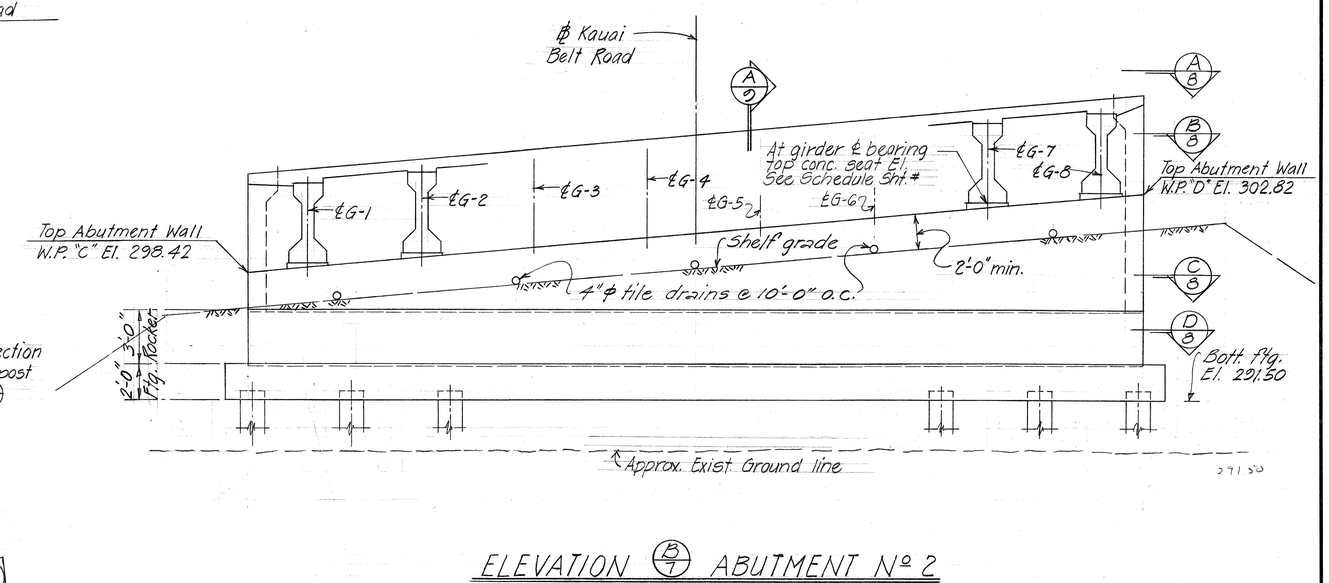

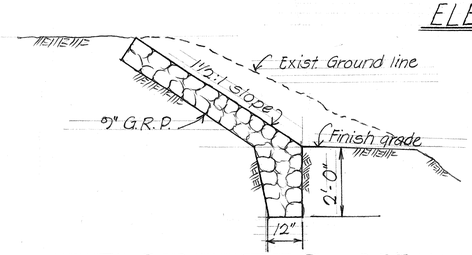

STATE OF HAWAII
DEPARTMENT OF TRANSPORTATION
HIGHWAYS DIVISION

KILAUEA STREAM BRIDGE

ABUTMENT #1 & #2
PLAN & DETAILS

Proj Nº RF-056-1(10) Apr. 1971

SHEET No. 7 OF 11 SHEETS

ORIGINAL PLAN	SURVEY PLOTTED BY	DATE
	DRAWN BY B.G.	
	TRACED BY	
NOTE BOOK	DESIGNED BY D.O.	
No.	QUANTITIES BY G.T. & T.M.	
	CHECKED BY P.Y. & J.O.	

PRINTED ON NO. 1000H CLEARPRINT

FED. ROAD DIST. NO.	STATE	FED. AID PROJ. NO.	FISCAL YEAR	SHEET NO.	TOTAL SHEETS
HAWAII	HAW.	RF-056-1(10)	1971	44	74

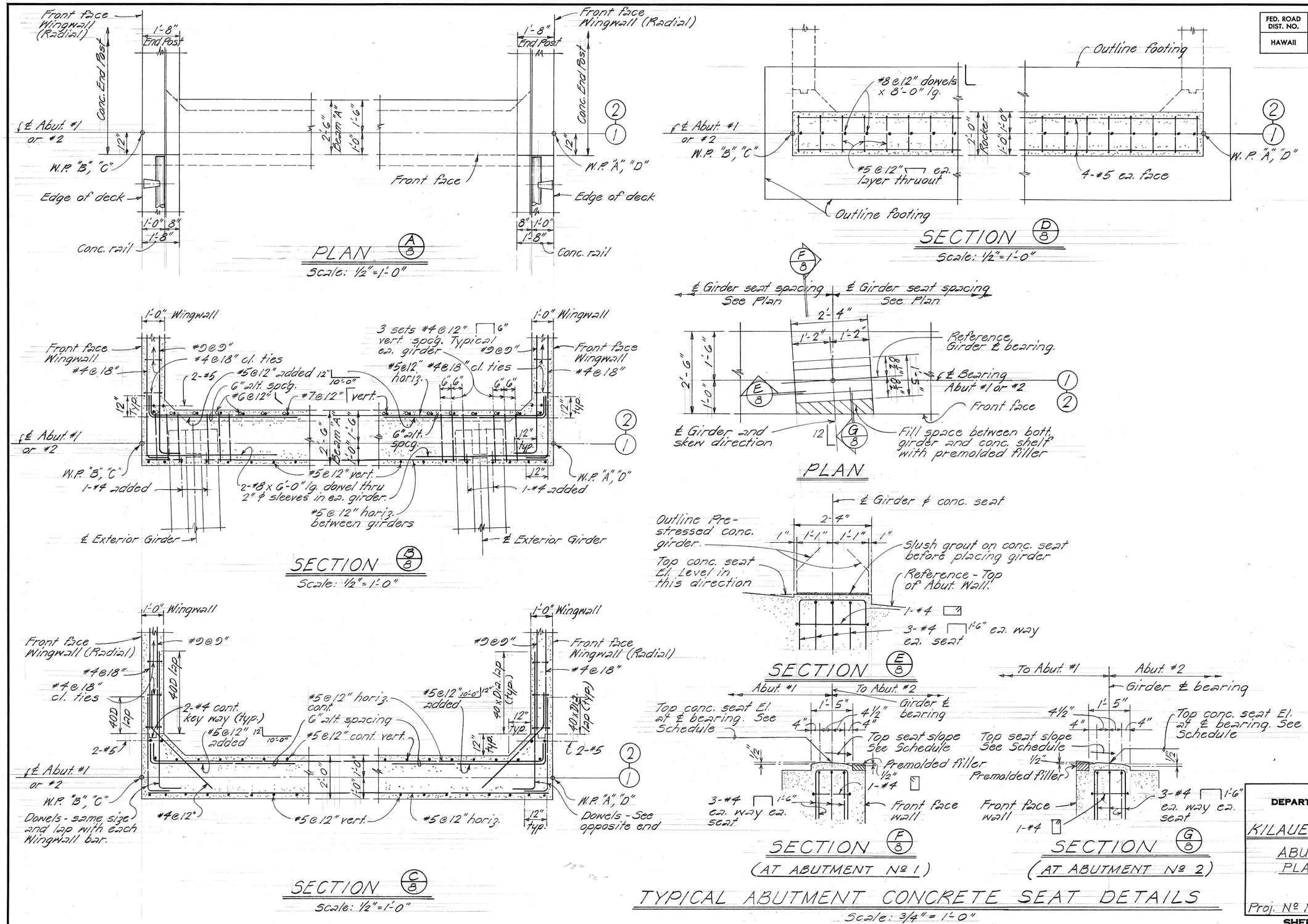

ORIGINAL PLAN	SURVEY PLOTTED BY	DATE
	DRAWN BY	
	TRACED BY	
NOTE BOOK	DESIGNED BY	
	QUANTITIES BY	
No.	CHECKED BY	

STATE OF HAWAII
DEPARTMENT OF TRANSPORTATION
HIGHWAYS DIVISION

KILAUEA STREAM BRIDGE

ABUTMENT #1 & #2
PLAN & SECTIONS

Proj. Nº RF-056-1(10) Apr. 1971

SHEET No. 8 OF 11 SHEETS

PRINTED ON NO. 1000H CLEARPRINT

FED. ROAD DIST. NO.	STATE	FED. AID PROJ. NO.	FISCAL YEAR	SHEET NO.	TOTAL SHEETS
HAWAII	HAW.	RF-056-1(10)	1971	45	74

REVISED: 2-10-72

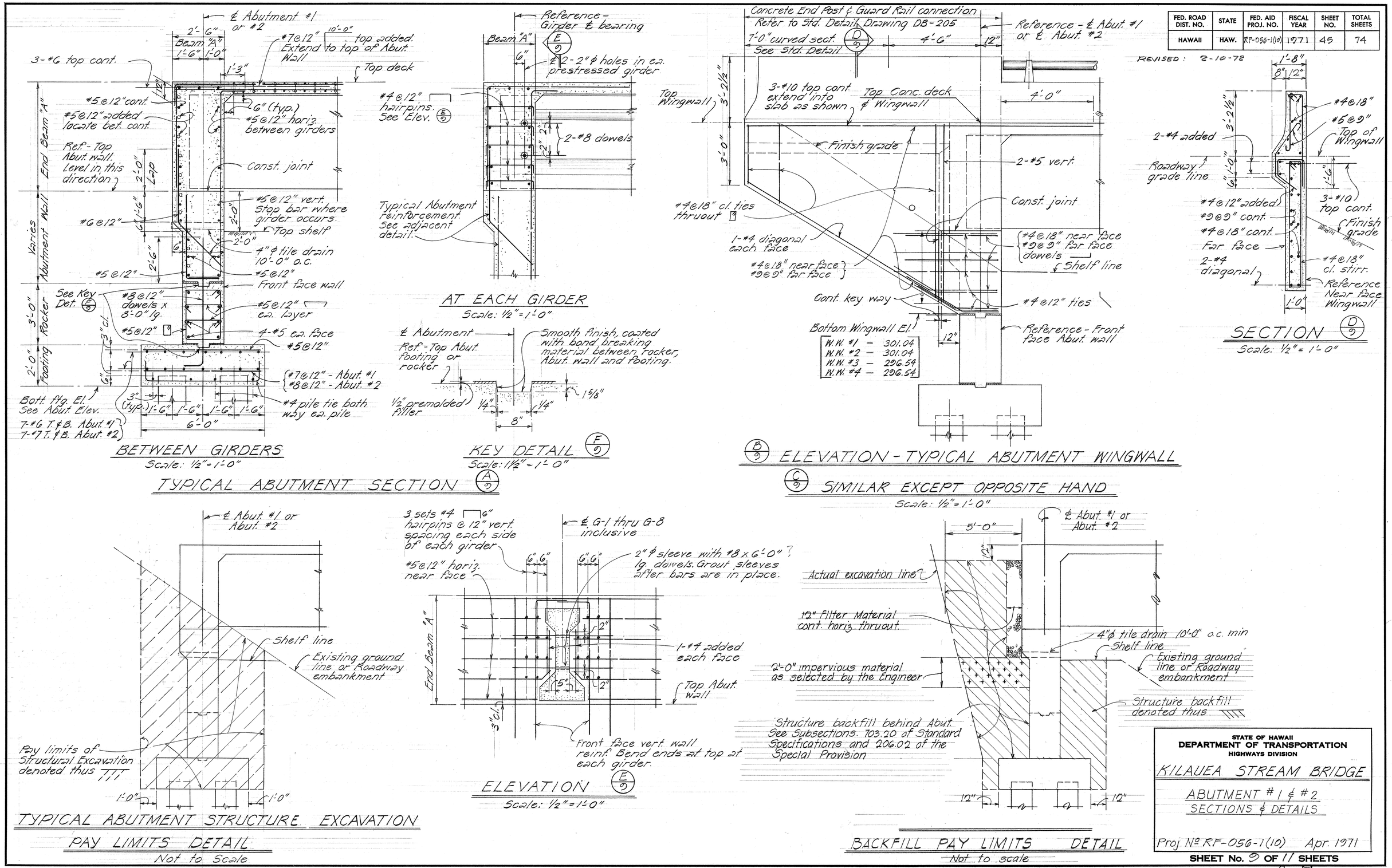

ORIGINAL PLAN		DATE
	SURVEY PLOTTED BY	
	DRAWN BY	J.M.
	TRACED BY	
	DESIGNED BY	D.O.
NOTE BOOK	CHANGED BY	C.T. & T.N.
No.	CHECKED BY	R.Y. & J.O.M.

STATE OF HAWAII
DEPARTMENT OF TRANSPORTATION
HIGHWAYS DIVISION

KILAUEA STREAM BRIDGE

ABUTMENT #1 & #2
SECTIONS & DETAILS

Proj. No. RF-056-1(10) Apr. 1971

SHEET No. 9 OF 11 SHEETS

45 / 74

PRINTED ON NO. 1000H CLEARPRINT

FED. ROAD DIST. NO.	STATE	FED. AID PROJ. NO.	FISCAL YEAR	SHEET NO.	TOTAL SHEETS
HAWAII	HAW.	RF-056-1(10)	1971	46	74

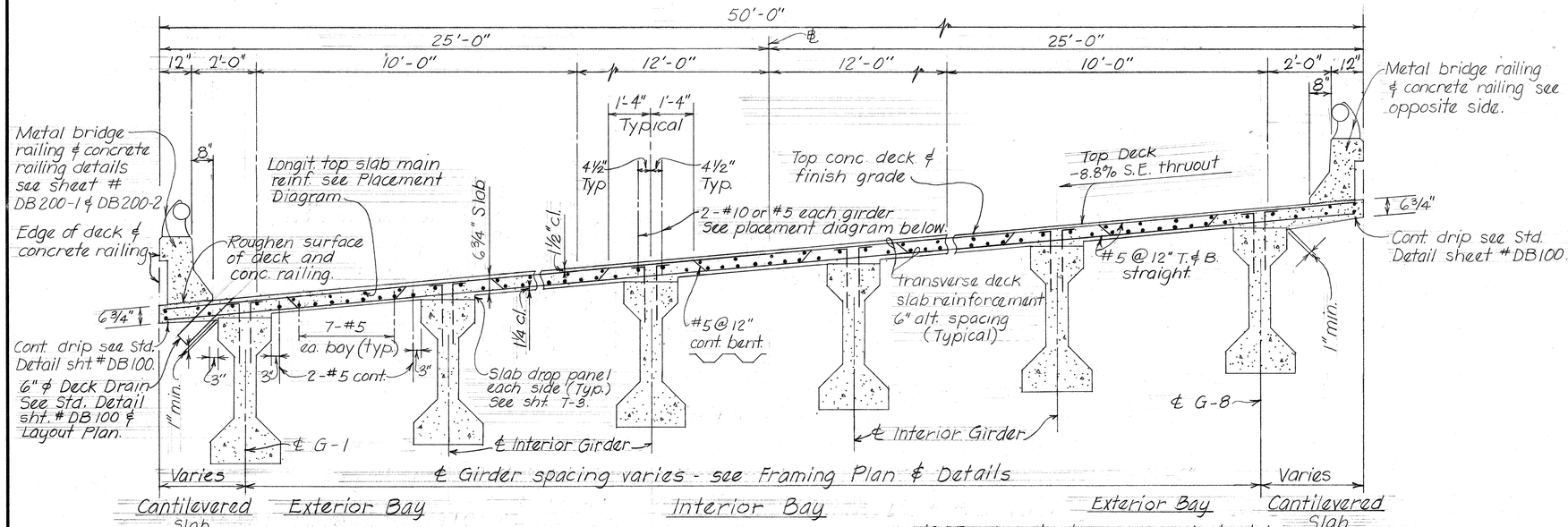

NORMAL DECK SECTION

Scale: 1/2" = 1'-0"

NOTE: Locate transverse deck slab reinf. radially at each span

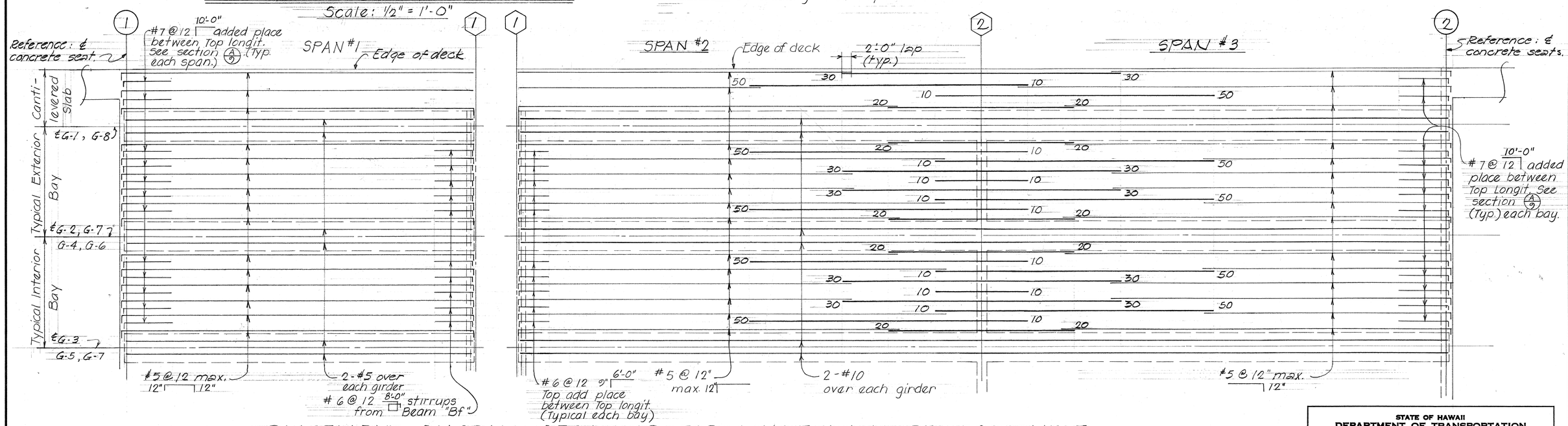

PLACEMENT DIAGRAM - DECK SLAB TOP LONGITUDINAL REINFORCEMENT

Scale: Vertical - 3/8" = 1'-0"
Horizontal - 1" = 10'-0"

NOTES:

All reinforcement in diagram are #10 except as otherwise noted.

Numbers at ends of bars indicate distance in feet from corresponding pier line (2).

For additional top reinforcement see normal section & corresponding details.

All #5 @ 12" max. bars shall be extended and lapped with the adjacent #10 bars as shown.

ORIGINAL PLAN	SURVEY PLOTTED BY	DATE
	DRAWN BY F.N. & L.A.	
	TRACED BY	
NOTE BOOK	DESIGNED BY D.O.	
	REVIEWED BY G.T. & F.M.	
No.	QUANTITIES BY J.O. & P.Y.	
	CHECKED BY	

STATE OF HAWAII
DEPARTMENT OF TRANSPORTATION
HIGHWAYS DIVISION

KILAUEA STREAM BRIDGE

NORMAL DECK SECTION & DETAILS

Proj. No. RF-056-1(10) Apr. 1971

SHEET No. 10 OF 11 SHEETS

PRINTED ON NO. 1000H CLEARPRINT

FED. ROAD DIST. NO.	STATE	FED. AID PROJ. NO.	FISCAL YEAR	SHEET NO.	TOTAL SHEETS
HAWAII	HAW.	RF-056-1(10)	1971	47	74

NOTE: Girder dimension L = Horizontal measurement between girder ℄ bearings each end of girder. The contractor shall determine the total length of girder.

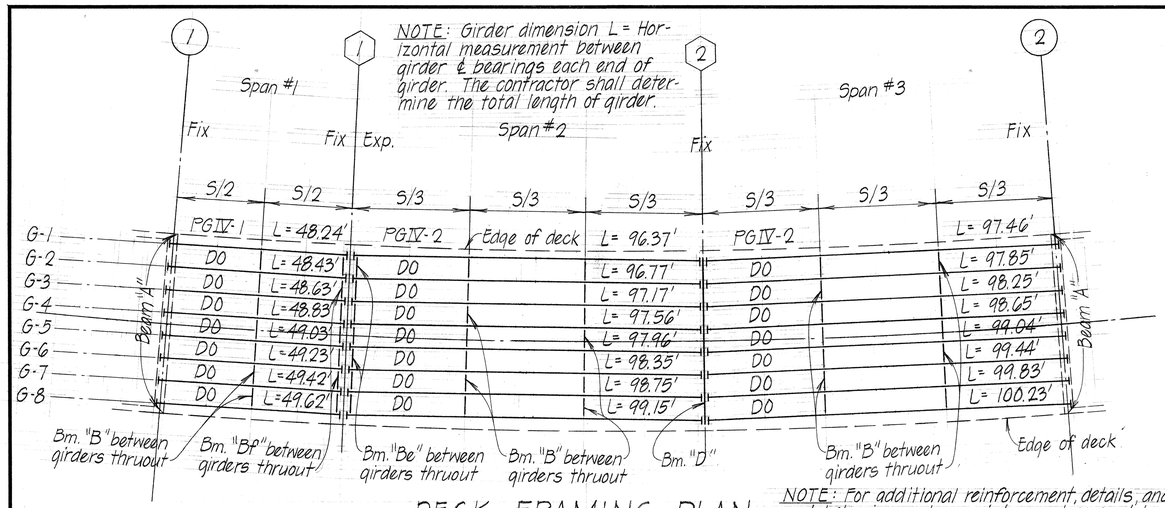

DECK FRAMING PLAN

Scale: 1" = 20'-0"

NOTE: For additional reinforcement, details, anchors, and holes in prestress girders not covered by these drawings refer to shts. #9, T-2, T-4

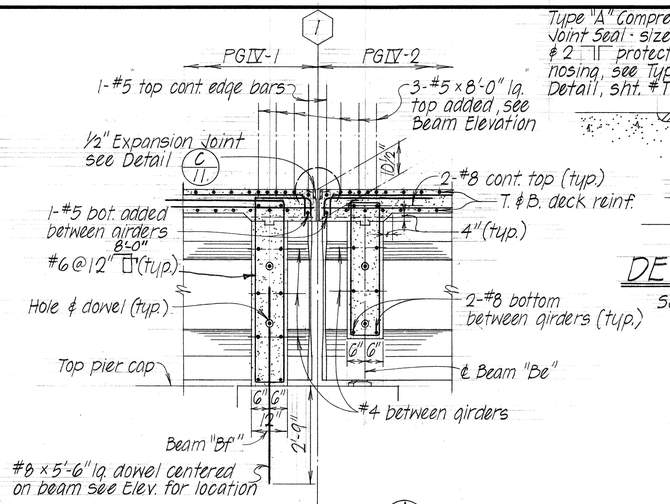

SECTION A/11

Scale: 1/2" = 1'-0"

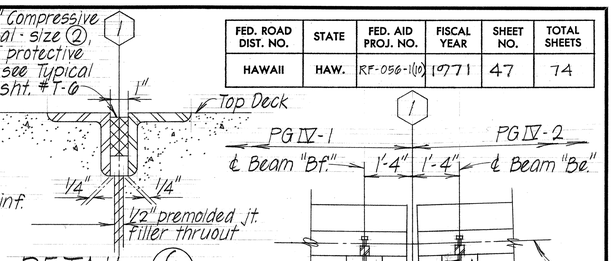

DETAIL C/11

Scale: 3" = 1'-0"

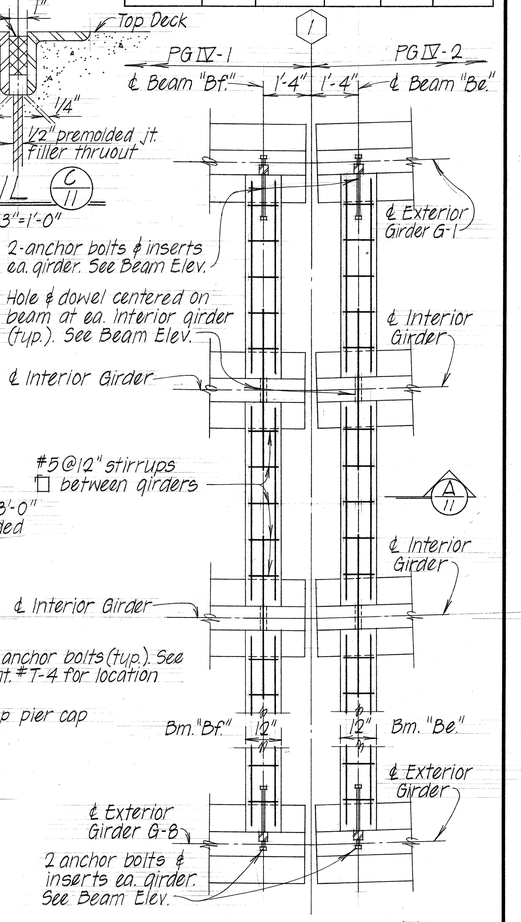

PIER LINE 1 TYPICAL SECTION B/11

Scale: 1/2" = 1'-0"

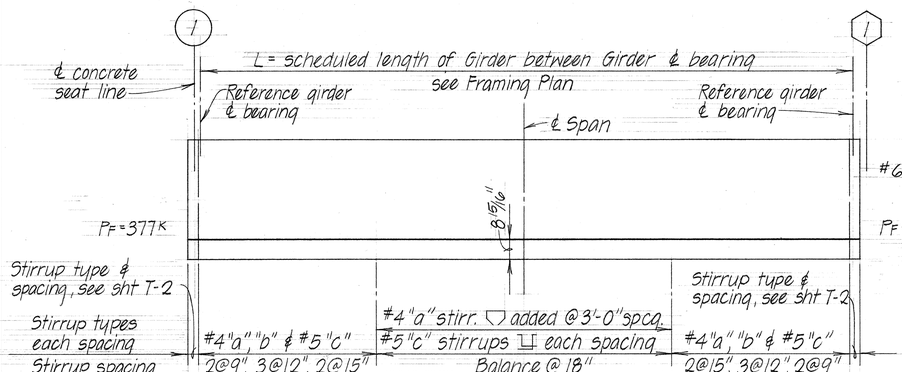

TYPICAL TYPE PGIV-1 GIRDER DETAILS

Not to Scale

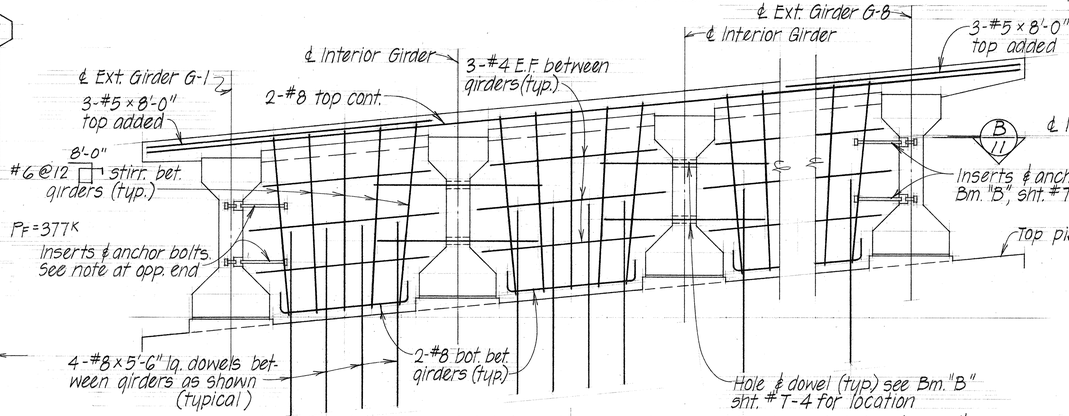

PART NORMAL ELEVATION - BEAM "Bf"

Scale: 1/2" = 1'-0"

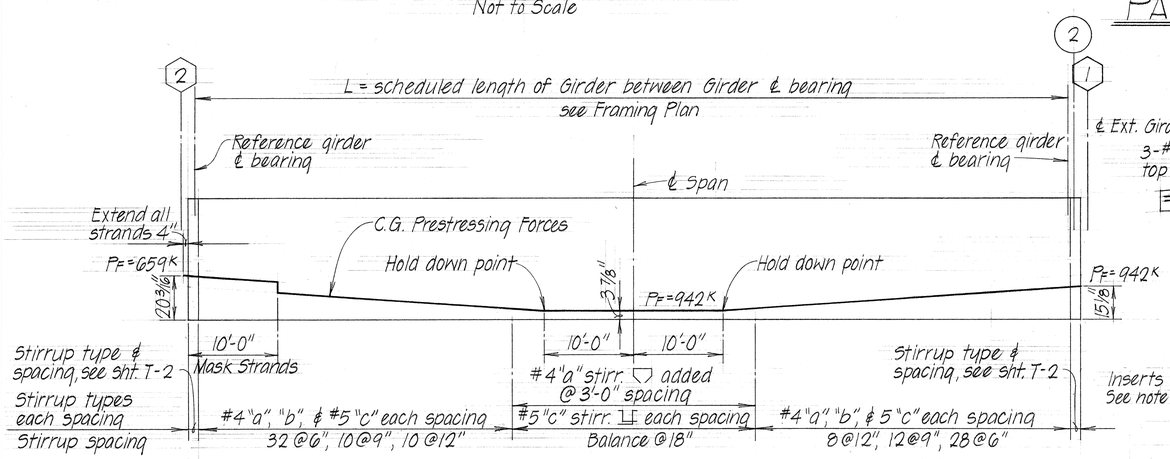

TYPICAL TYPE PGIV-2 GIRDER DETAILS

Not to Scale

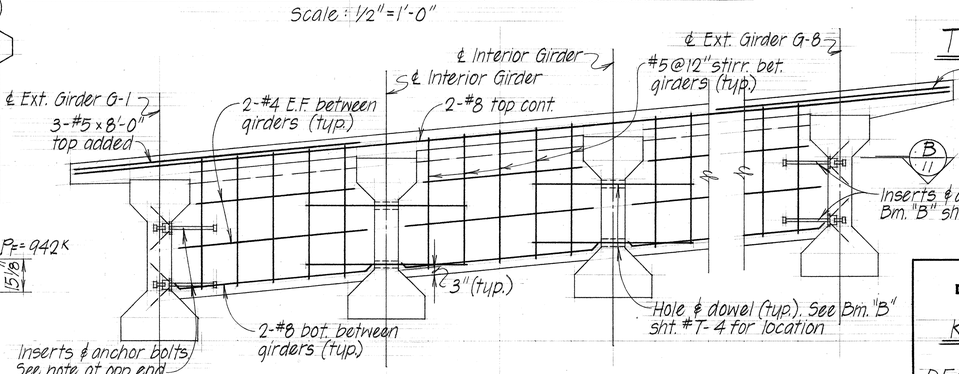

PART NORMAL ELEVATION - BEAM "Be"

Scale: 1/2" = 1'-0"

STATE OF HAWAII
DEPARTMENT OF TRANSPORTATION
HIGHWAYS DIVISION

KILAUEA STREAM BRIDGE

DECK FRAMING PLAN & DETAILS

Proj. No. RF-056-1(10) Apr. 1971

SHEET No. 11 OF 11 SHEETS

ORIGINAL PLAN	SURVEY PLOTTED BY	DATE 4-71
	TRACED BY	D.L.
NOTE BOOK	DESIGNED BY	D.G.
	QUANTITIES BY	J.O.T. & T.M.
No.	CHECKED BY	J.O.T. & P.Y.

PRINTED ON NO. 1000H CLEARPRINT

8.8 %

47 of 74

FED. ROAD DIST. NO.	STATE	FED. AID PROJ. NO.	FISCAL YEAR	SHEET NO.	TOTAL SHEETS
HAWAII	HAW.	RF-056-1(10)	1971	48	74

DESIGN NOTES

DESIGN SPECIFICATIONS: AASHO
Standard Specifications for Highway Bridges (10th Edition) with subsequent Interim Specifications.

DESIGN LOADS: HS-20-44 or Interstate loading

DESIGN STRESSES:

1. R.C. beams & slabs - See AASHO Specifications and Special Provisions except as otherwise noted.

Class A	Class E
f'c = 3,000 psi	4,500 psi
fc = 1,200 psi	1,800 psi
n = 10	8
fs = ASTM A615, see Special Provisions	

2. Prestressed Girders

f'c = 5,500 psi	1/2" dia. 7 wire strands
f'ci = 4,000 psi	Tensioning load = 25,200 lbs. per strand

Design load = 23,550 lbs. per strand.
Forms must be removed and the beams inspected before the strands are cut

3. Pile Capacity - See corresponding bridge detail drawings.

GENERAL NOTES

MATERIALS:

1. All concrete shall be class A except as otherwise noted on plans. Concrete for prestressed concrete girders see Standard Specifications and as noted under Design Stresses
2. Preformed fabric bridge bearing pads are incidental to concrete and will not be paid for separately.
3. See Special Provisions for admixture in concrete.
4. All piles to be prestressed concrete piles Type I - see Standard Det. Sht. Nos. DB-300-1, DB-300-2
5. The limits of the structure fill or backfill material requiring a sand equivalent value of not less than 20 shall extend up to the bottom of the roadway subgrade lines.

CONSTRUCTION METHODS:

1. See Standard Specifications and Special Provisions
2. For Concrete finish see Special Provisions. Concrete seats and creep blocks to be poured monolithically with pier. Top surfaces of conc. seats to have hard trowel finish.
3. See details for additional surface finish.
4. In general, top & edge of concrete deck of superstructure shall be constructed to follow the finish roadway vertical & horizontal curves and grades.
5. Backfill for both abutments to be placed simultaneously at each abutment after the superstructure is cured.

REFERENCE:

1. Refer to Standard Detailed Drawings for additional details not covered by detailed plans.
2. Typical Details drawing sheet Nos. T-1 thru T-6 inclusive refers to the bridge Structure except for modification as may be required by special conditions. For such modifications see corresponding detailed plans.

GENERAL:

1. Additional structure fill where indicated on detailed drawings shall be incidental to structural excavation, roadway excavation, or imported borrow.
2. All items noted incidental will not be paid for separately.

SYMBOLS & ABBREVIATION

1A - Pier column number
Location pier line number - 1
A - Column line alphabet
1 2 - Location concrete seat line number
(00.0) - Bottom footing elevation
[00.0] - Pile cut-off elevation
{00.0} - Pile tip elevation
- Type I pile
A/7 - Section Designation / Sht. number detail is drawn on
S-1 - Boring number and designation
PG-IV - Prestressed Girder Type

S.E. - Superelevation
G-1, G-2 - Girder numbers.

℄ - Baseline
Pt. - Point
Exp. - Expansion
No. - Number
Cont. - Continuous
E.F. - Each Face
B.F. - Both Face
N.F. - Near Face
F.F. - Far Face
W.P. - Working Point
ea. - each
Bal. - Balance
Bot, Bott - Bottom
T - Top
Ext. - Exterior
Int. - Interior
oc. - on center
Typ. - Typical

Str. - Straight
Stirr. - Stirrup

STATE OF HAWAII
DEPARTMENT OF TRANSPORTATION
HIGHWAYS DIVISION
TYPICAL DETAILS
KILAUEA STREAM BRIDGE
NOTES AND ABBREVIATIONS

Proj. No. RF-056-1(10) Apr. 1971
SHEET No. T-1 OF 6 SHEETS

ORIGINAL PLAN	SURVEY PLOTTED BY	DATE
	DRAWN BY	
	TRACED BY	
NOTE BOOK	DESIGNED BY	
	QUANTITIES BY	
No.	CHECKED BY	

PRINTED ON NO. 1000H CLEARPRINT

FED. ROAD DIST. NO.	STATE	FED. AID PROJ. NO.	FISCAL YEAR	SHEET NO.	TOTAL SHEETS
HAWAII	HAW.	RF-056-1(10)	1971	49	74

AASHO-PCI STANDARD BRIDGE GIRDER DIMENSION

GIRDER TYPE	H	X	Y	a	b	c	d	e	f	g	J	k	ℓ	m	n
PG I	2'-4"	1'-0"	1'-4"	5"	5"	11"	3"	—	4"	6"	—	3"	5"		
PG II	3'-0"	1'-0"	1'-6"	6"	6"	1'-3"	3"	—	6"	6"	—	3"	6"		
PG III	3'-9"	1'-4"	1'-10'	7"	7½"	1'-7"	4½"	—	7"	7"	—	4½"	7½"		
PG IV	4'-6"	1'-8"	2'-2"	8"	9"	1'-11"	6"	—	8"	8"	—	6	9"		

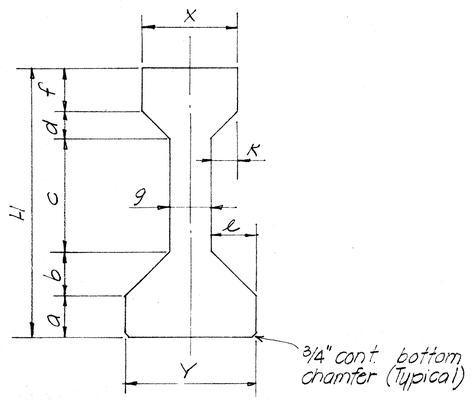

TYPE PG I THRU TYPE PG IV

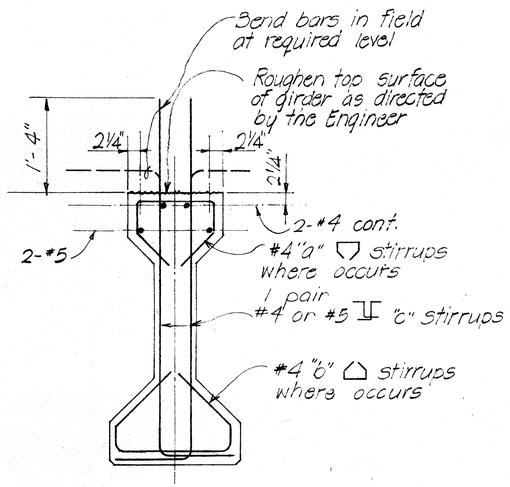

TYPE PG I THRU TYPE PG IV

TYPICAL SECTION PRESTRESSED CONC. GIRDERS

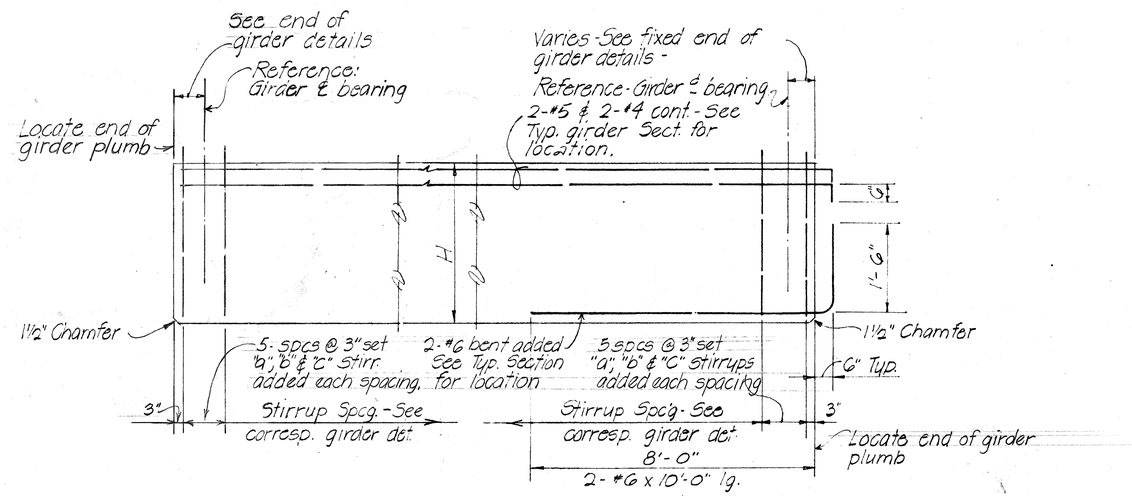

AT PIER (1) ENDS OF GIRDER

AT PIER (2) ENDS OF GIRDER
AT ABUTMENTS #1 & #2 ENDS OF GIRDER

TYPICAL DETAILS — ENDS OF GIRDER

BUNDLING OF PRESTRESSING REINFORCEMENT

ARRANGEMENT AND CLEARANCE FOR POST TENSIONED UNITS

1. Horizontal clearance between units equals 2" min.
2. Units may be bundled vertically in groups of 3 maximum.
3. Vertical clearance between bundled units equal 3" minimum.
4. Approval of the Engineer is required for deviation.

ARRANGEMENT AND CLEARANCE FOR PRETENSIONED STRANDS

1. Strands may be bundled in groups as shown.
2. The minimum distance "S" between groups or individual strands is 2" for ½" strands.
3. "S" is measured between centers of adjacent strands.

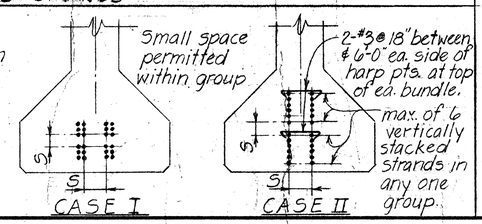

GENERAL NOTES

1- For additional holes and inserts in prestressed girders for Beam connections, refer to corresponding beam details.
2- For design stress refer to Shts T-1 & corresponding girder detail drawings.

SURVEY PLOTTED BY	
DRAWN BY	G.T.
TRACED BY	
DESIGNED BY	
QUANTITIES BY	
CHECKED BY	
DATE	
ORIGINAL PLAN	
NOTE BOOK	
No.	

STATE OF HAWAII
DEPARTMENT OF TRANSPORTATION
HIGHWAYS DIVISION

TYPICAL DETAILS
PRESTRESSED GIRDER
KILAUEA STREAM BRIDGE

Proj. No. RF-056-1(10) Apr. 1971

SHEET No. T-2 OF 6 SHEETS

FED. ROAD DIST. NO.	STATE	FED. AID PROJ. NO.	FISCAL YEAR	SHEET NO.	TOTAL SHEETS
HAWAII	HAW.	RF-056-1(10)	1971	50	74

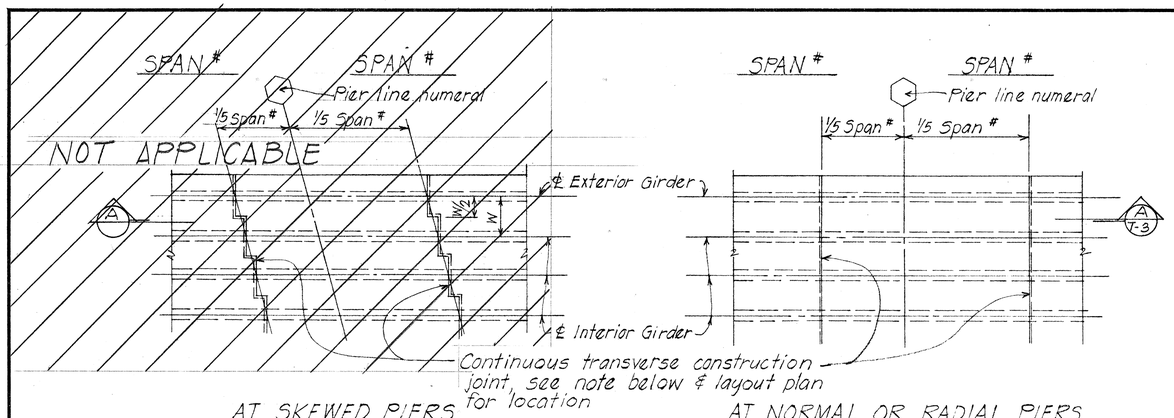

AT SKEWED PIERS

AT NORMAL OR RADIAL PIERS

PLAN - TYPICAL TRANSVERSE DECK CONSTRUCTION JOINT LOCATION

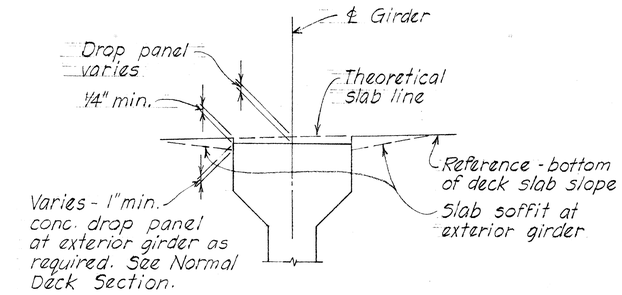

TYPICAL SLAB DROP PANEL DETAIL AT PRESTRESSED GIRDER

No Scale

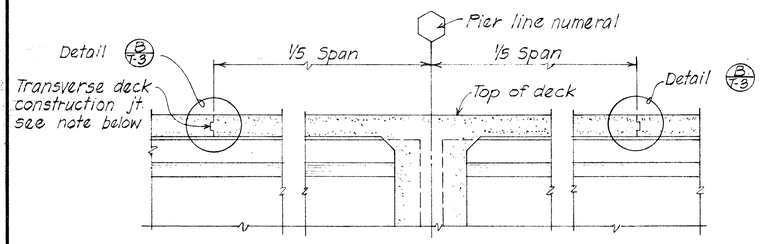

A/T-3 DETAIL OF CONTINUOUS SLAB OVER PIER

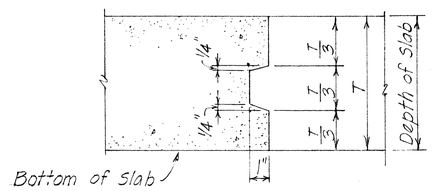

B/T-3 TYPICAL SLAB CONSTRUCTION JOINT DETAIL

NOTE:

Transverse deck construction joint shall be used at these locations. The portion of the pour indicated between construction joints over the pier shall not be poured until the pours for the adjacent positive moment areas have been completed.

Transverse deck construction joints may be eliminated if permitted by the Engineer in writing. If the construction joints are eliminated, water reducing and retarding admixture conforming to AASHO Designation: M194, Type D, shall be added to the deck concrete over the pier within the indicated lines. The type of the admixture shall be such that the amount of dosage used will produce the retardation required. The type and dosage of the admixture, and the method of pour shall be approved by the Engineer.

ORIGINAL PLAN	SURVEY PLOTTED BY	DATE
	DRAWN BY	"
	TRACED BY	"
NOTE BOOK	DESIGNED BY	"
	QUANTITIES BY	"
No.	CHECKED BY	"

STATE OF HAWAII
DEPARTMENT OF TRANSPORTATION
HIGHWAYS DIVISION

TYPICAL DETAILS

KILAUEA STREAM BRIDGE

PRESTRESSED GIRDER SUPERSTRUCTURE

Proj. No. RF-056-1(10) Apr. 1971

SHEET No. T-3 OF 6 SHEETS

50

FED. ROAD DIST. NO.	STATE	FED. AID PROJ. NO.	FISCAL YEAR	SHEET NO.	TOTAL SHEETS
HAWAII	HAW.	RF-056-1(10)	1971	51	74

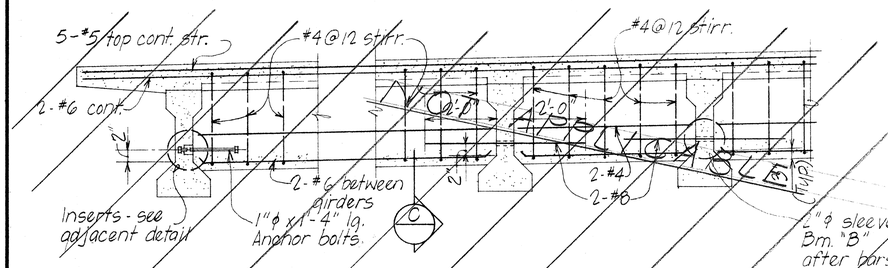

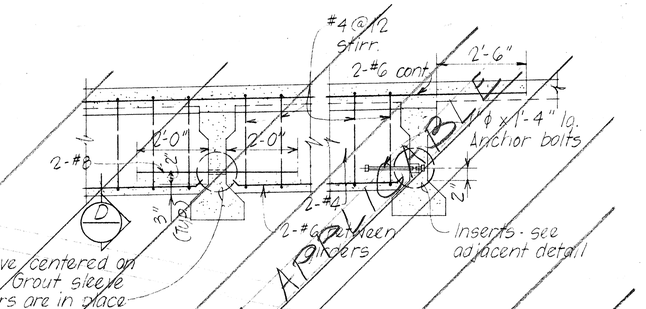

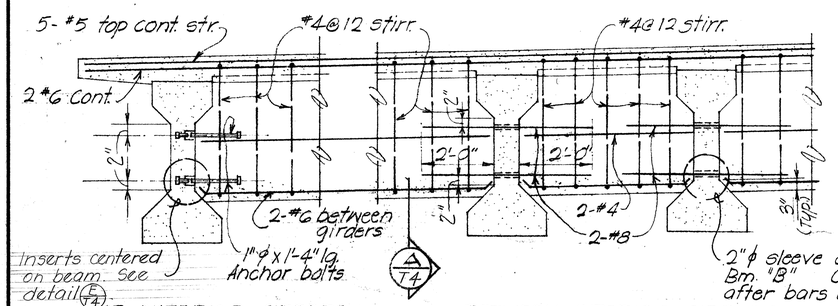

TYPICAL BEAM "B" DETAIL Scale: 1/2"=1'-0"

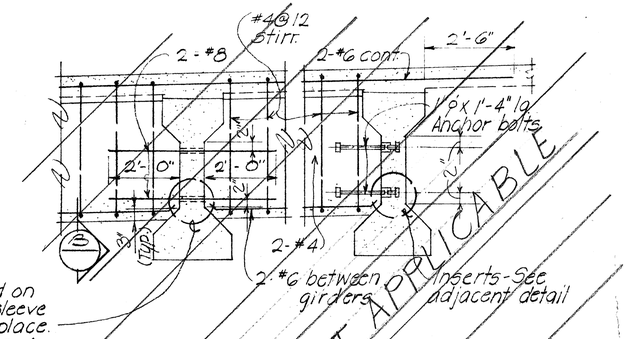

TYPICAL BEAM "Ba" DETAIL Scale: 1/2"=1'-0"

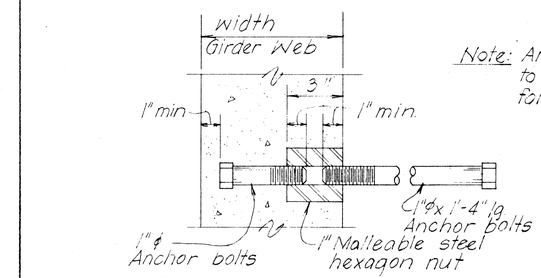

Note: Anchor bolts & inserts incidental to concrete and will not be paid for separately.

E/T-4 TYPICAL INSERT DETAIL
Scale: 3"=1'-0"

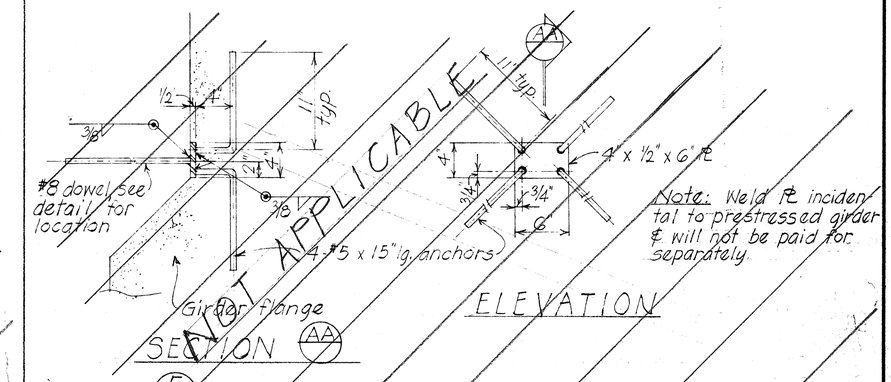

Note: Weld PL incidental to prestressed girder & will not be paid for separately.

F TYPICAL WELD PL DETAIL Scale: 1 1/2"=1'-0"

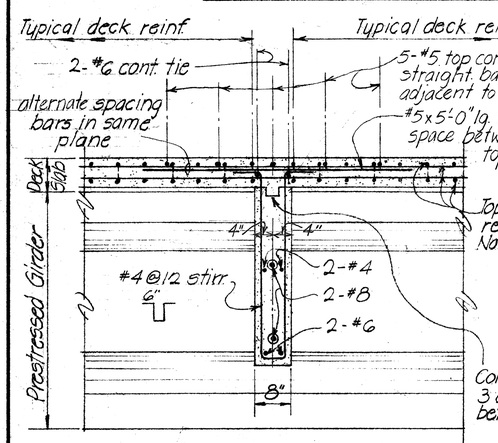

TYPICAL SECTION A/T-4
Scale: 3/4"=1'-0"

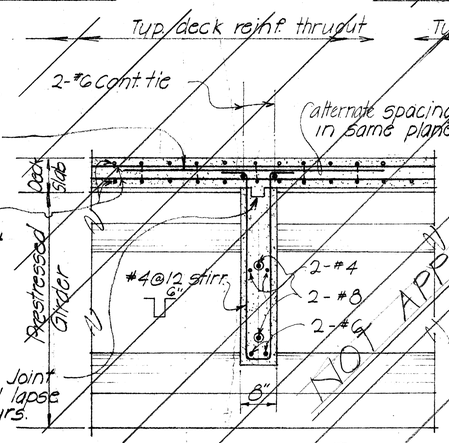

SECTION B
Scale: 3/4"=1'-0"

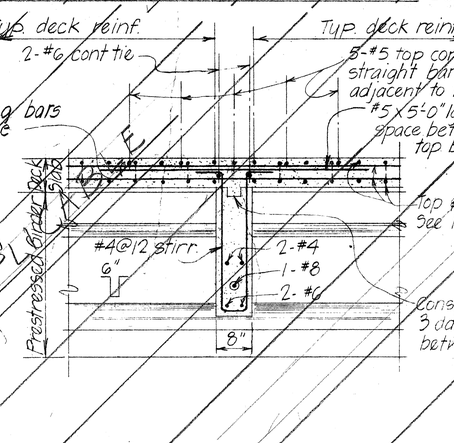

TYPICAL SECTION C
Scale: 3/4"=1'-0"

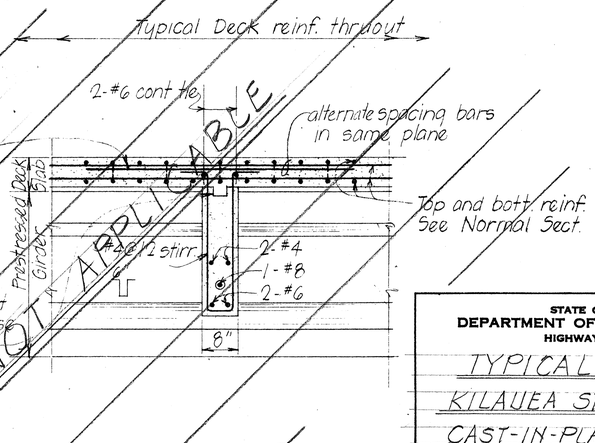

SECTION D
Scale: 3/4"=1'-0"

STATE OF HAWAII
DEPARTMENT OF TRANSPORTATION
HIGHWAYS DIVISION

TYPICAL DETAILS
KILAUEA STREAM BRIDGE
CAST-IN-PLACE BEAM "B"

Proj. No. RF-056-1(10) Apr. 1971

SHEET No. T-4 OF 6 SHEETS

ORIGINAL PLAN	SURVEY PLOTTED BY	DATE
	DRAWN BY	
	TRACED BY	
NOTE BOOK	DESIGNED BY	
	QUANTITIES BY	
No.	CHECKED BY	

K+E CRYSTALENE® LA 2920 TRACING PAPER

51

FED. ROAD DIST. NO.	STATE	FED. AID PROJ. NO.	FISCAL YEAR	SHEET NO.	TOTAL SHEETS
HAWAII	HAW.	RF-056-1(10)	1971	52	74

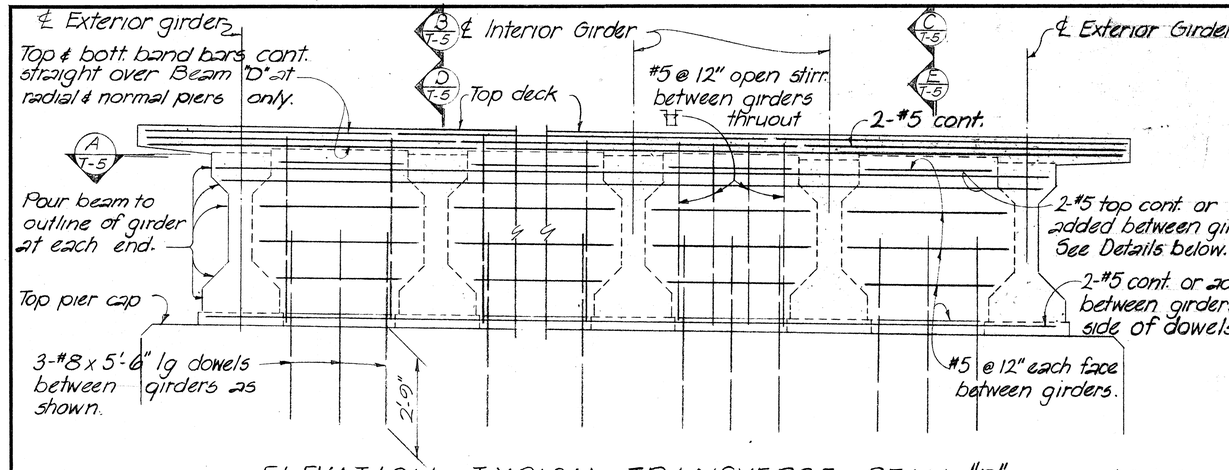

ELEVATION - TYPICAL TRANSVERSE BEAM "D" Scale: ½" = 1'-0"

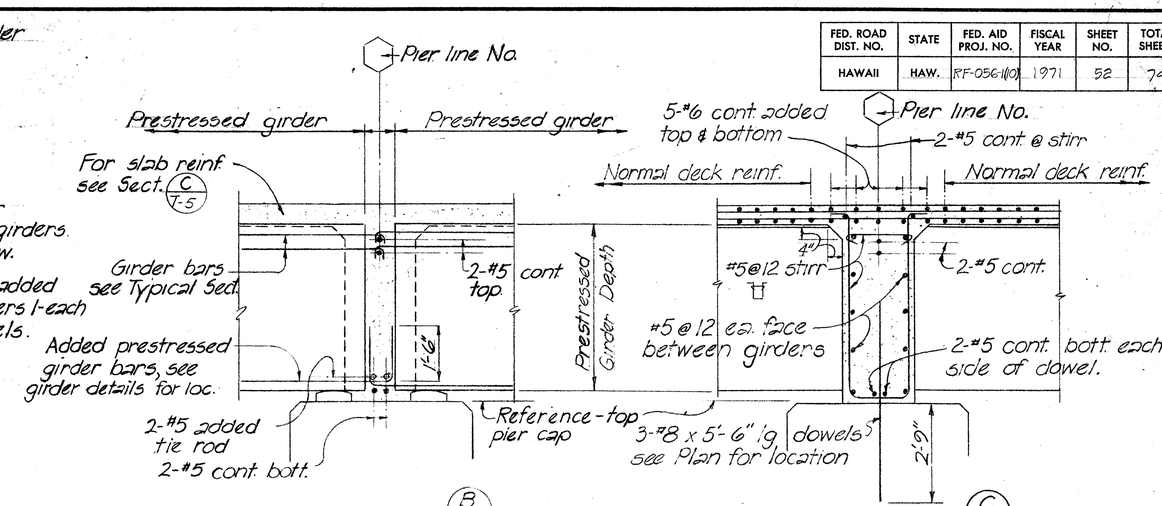

SECTION B T-5 (AT GIRDERS) Scale: ½" = 1'-0"

SECTION C T-5 (BETWEEN GIRDERS) Scale: ½" = 1'-0"

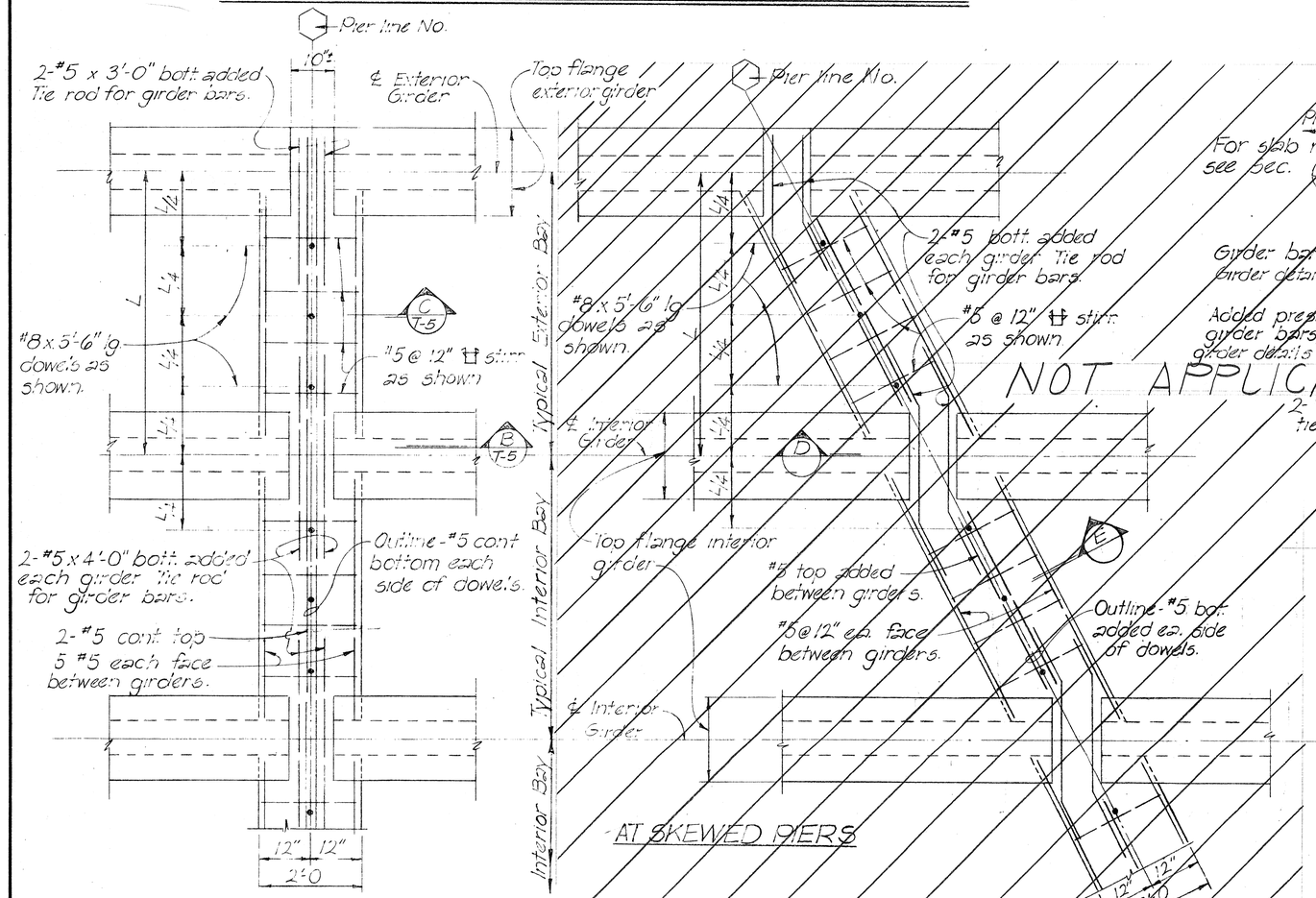

AT RADIAL & NORMAL PIERS

AT SKEWED PIERS

TYPICAL SECTION A T-5 Scale: ¾" = 1'-0"

NOT APPLICABLE

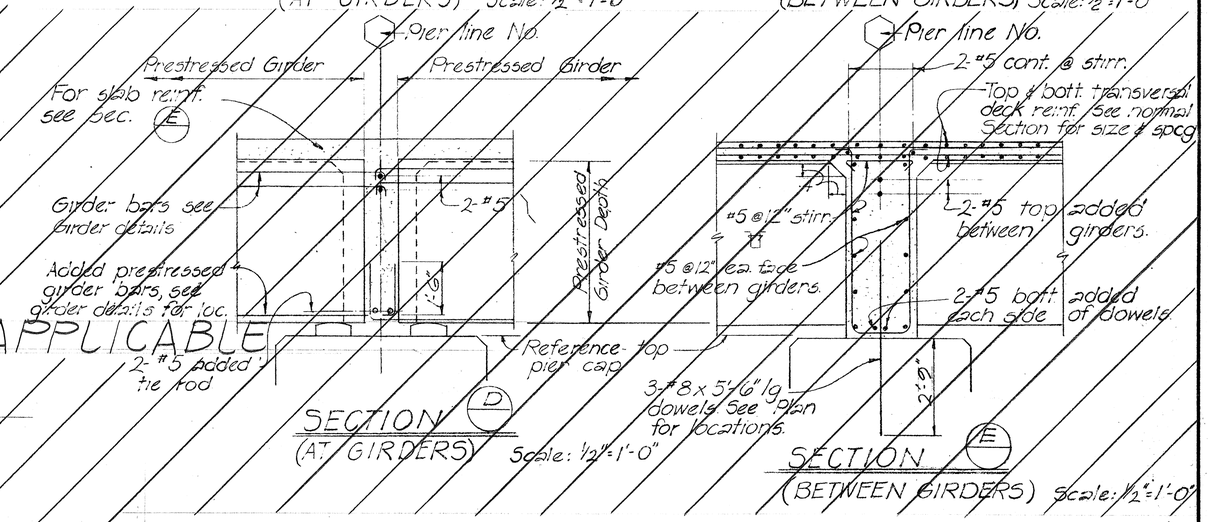

SECTION D (AT GIRDERS) Scale: ½" = 1'-0"

SECTION E (BETWEEN GIRDERS) Scale: ½" = 1'-0"

ORIGINAL PLAN	SURVEY PLOTTED BY	DATE
	DRAWN BY	
	TRACED BY	
NOTE BOOK	DESIGNED BY	
	QUANTITIES BY	
No.	CHECKED BY	

STATE OF HAWAII
DEPARTMENT OF TRANSPORTATION
HIGHWAYS DIVISION

TYPICAL DETAILS
KILAUEA STREAM BRIDGE
CAST IN PLACE BEAM "D" DETAILS

Proj. No. RF-056-1(10) April 1971

SHEET No. T-5 OF 6 SHEETS

52

PRINTED ON NO 1000H CLEARPRINT

FED. ROAD DIST. NO.	STATE	FED. AID PROJ. NO.	FISCAL YEAR	SHEET NO.	TOTAL SHEETS
HAWAII	HAW.	RF-056-1(10)	1971	53	74

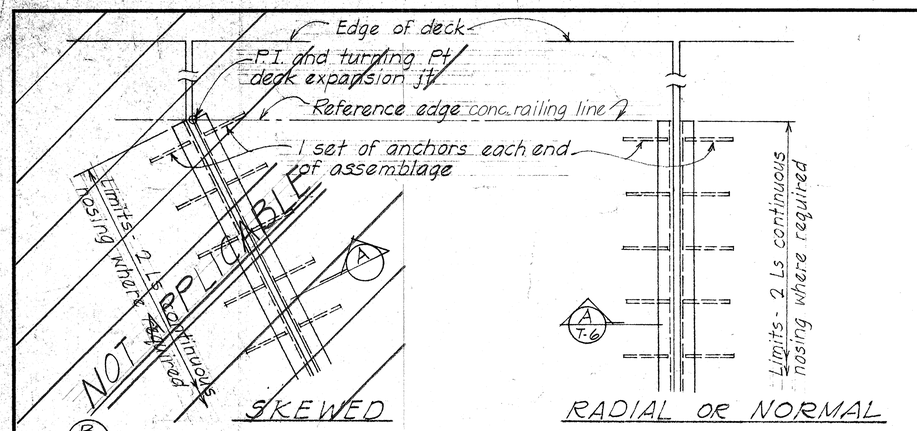

B T-6 PLAN TRANSVERSE DECK EXPANSION JOINT

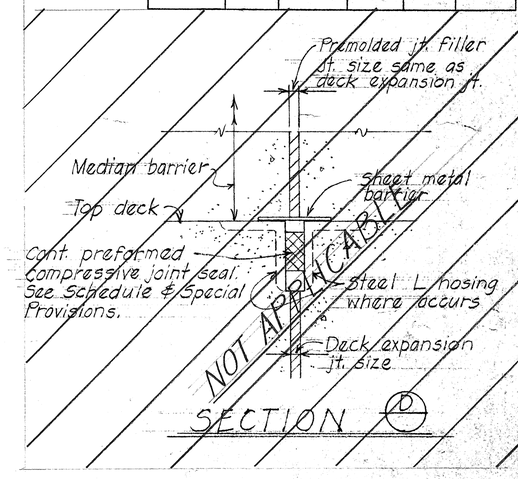

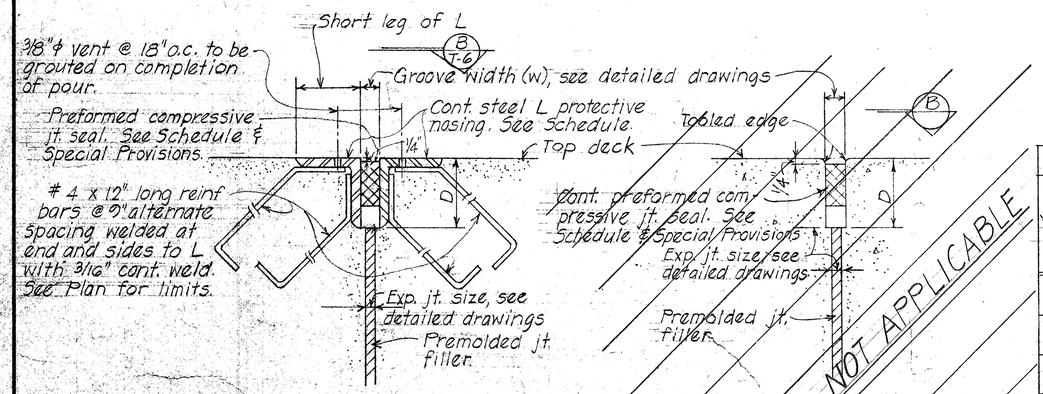

AT STEEL ANGLE PROTECTIVE NOSING

AT PLAIN CONCRETE GROOVE

TYPICAL SECTION A T-6

Scale: 3" = 1'-0"

EXPANSION JOINT SEALER SCHEDULE

Joint Seal Size	Type A - Joint Sealer (Dimensions and Tolerances) J	H	Thickness T	t	Steel Angle Protective Nosing	Groove Dim. D	Type B - Joint Sealer (Dimensions and Tolerances) J	H	Thickness T	t
2	1 3/4 +3/16 -0	2 ± 1/8	1/8 +1/32 -1/64	3/32 +1/64 -1/32	3 1/2" x 3 1/2" x 1/2"	3 1/2"	1 3/4 +3/16 -0	1 3/4 ± 3/16	5/64 +1/32 -0	–
3	2 +3/16 -0	2 1/16 ± 1/8	1/8 +1/32 -1/64	3/32 +1/32 -1/64	4" x 3 1/2" x 1/2"	4"	2 +5/32 -0	2 +1/8 -0	1/16 +1/32 -0	–
4	2 1/2 +1/4 -0	2 3/4 ± 1/8	3/16 +3/64 -1/64	3/32 +1/32 -1/64	5" x 3 1/2" x 1/2"	5"				
5	3 +1/4 -0	3 13/32 ± 3/16	3/16 +3/64 -1/64	1/8 +3/64 -1/64	6" x 3 1/2" x 1/2"	6"				
6	4 +5/16 -0	4 23/32 ± 1/4	1/4 +3/64 -1/32	3/16 +3/64 -1/64	7" x 4" x 1/2"	7"				

NOT APPLICABLE

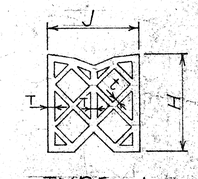

TYPE A

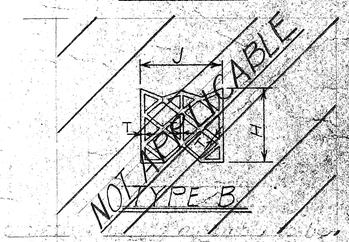

TYPE B

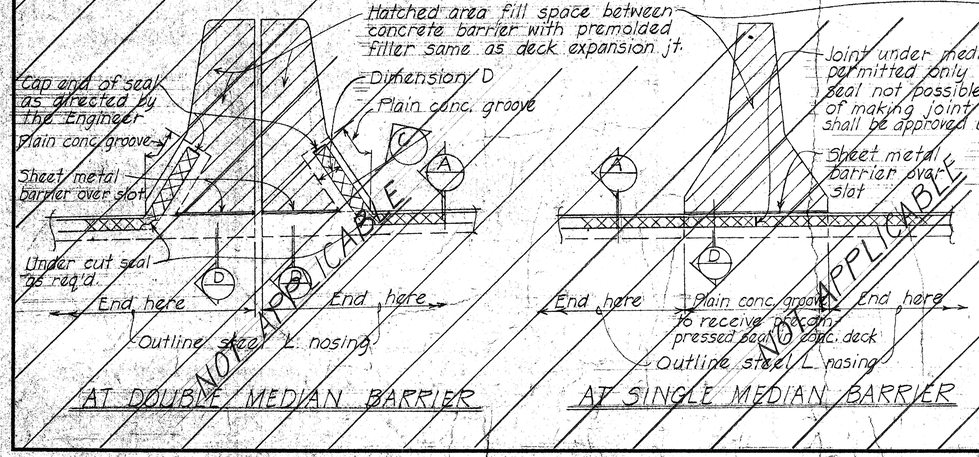

AT DOUBLE MEDIAN BARRIER

AT SINGLE MEDIAN BARRIER

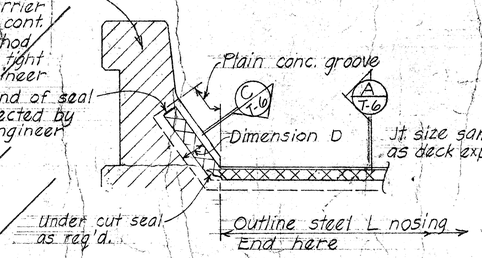

AT CONCRETE RAILING

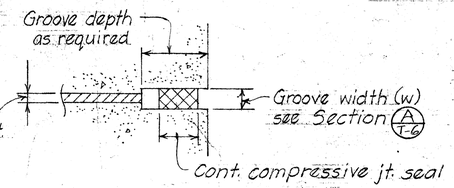

SECTION C T-6

NOTE: Steel angle protective nosing assembly to be hot dipped galvanized after fabrication.

Steel angle protective nosing assembly and joint sealer incidental to concrete and will not be paid for separately.

STATE OF HAWAII
DEPARTMENT OF TRANSPORTATION
HIGHWAYS DIVISION

TYPICAL DETAILS

EXPANSION JOINT PREFORMED COMPRESSIVE JOINT SEALER

WATERPROOFING DETAILS

KILAUEA STREAM BRIDGE

Proj. No. RF-056-1(10) Apr. 1971

SHEET No. T-6 OF 6 SHEETS

ORIGINAL PLAN	SURVEY PLOTTED BY	DATE
	PLANS PREPARED BY	
	TRACED BY	
NOTE BOOK	DESIGNED BY	
	QUANTITIES BY	
No.	CHECKED BY	

53

FED. ROAD DIST. NO.	STATE	FED. AID PROJ. NO.	FISCAL YEAR	SHEET NO.	TOTAL SHEETS
HAWAII	HAW.	RF-056-1(10)	1971	54	74

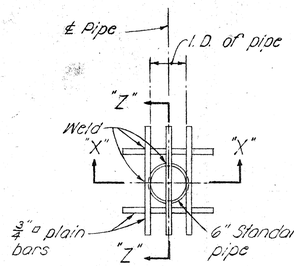

PLAN

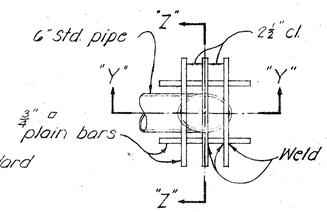

PLAN

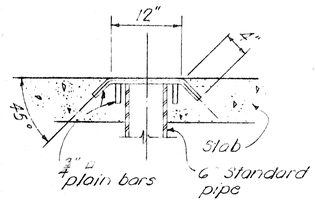

SECTION "Z-Z"

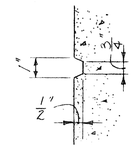

TYPICAL CONCRETE GROOVE DETAIL

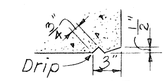

DRIP DETAIL

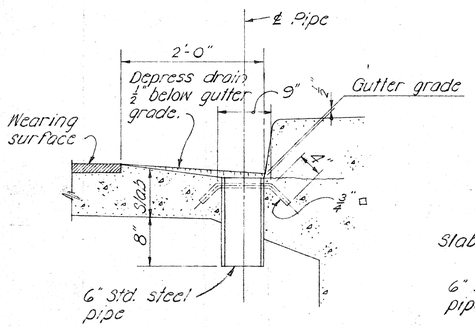

SECTION "X-X"

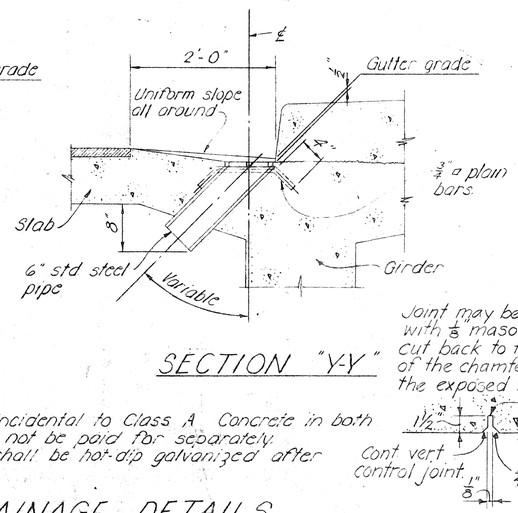

SECTION "Y-Y"

NOTE:

Metal drains shall be considered incidental to Class A Concrete in both concrete and steel bridges and will not be paid for separately.

Assemblage of grillage and pipe shall be hot-dip galvanized after all welding is completed.

TYPICAL DRAINAGE DETAILS

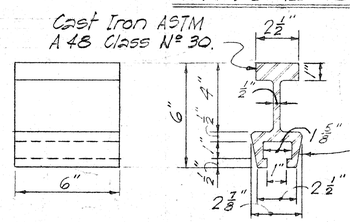

INSERT DETAIL

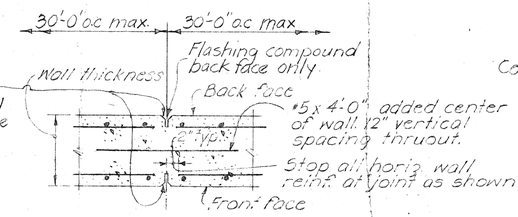

CONTROL JOINT DETAILS

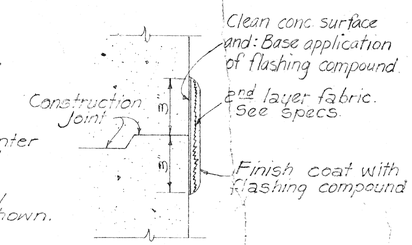

TYP. FLASHING COMPOUND WATERPROOFING DETAIL

GENERAL NOTES

1 - All concrete shall be Class A unless otherwise noted.
2 - Reinforcing shall be detailed in accordance with A.C.I. Manual of Standard Practice for Detailing Reinforced Concrete Highway Structures unless otherwise noted.
3 - Clearance for reinforcing bars shall be as follows, unless otherwise noted:
  a - 1 1/2" For stirrups of beams & pier caps.
  b - 2" for ties of columns.
  c - 2" For formed walls.
  d - 3" For footings.
4 - Minimum spacing between parallel bars shall be 2 1/2 times the diameter of bars, but in no case shall the clear distance between the bars be less than 1 1/2 times the maximum size of the coarse aggregate.
5 - All dimensions relating to reinforcing are to centers of bars unless otherwise noted.
6 - Reinforcing bars shall be securely tied at all intersections & lap splices & shall be held in place during pouring to maintain their proper locations as shown on plans.
7 - Vertical column bars shall be arranged in such a manner as to miss pier cap bars above as directed by the Engineer.
8 - Except as otherwise noted on drawings, all exterior corners & re-entrant angles in concrete work shall be chamfered 3/4" x 3/4".
9 - Concrete seats receiving steel plates, leadplates or neoprene pads shall be poured monolithically with supporting structures & top of concrete seats shall be finished with a steel trowel to a smooth level surface at the elevation shown on the plans.
10 - Elastomeric Pads: Bottom of bridge bearing pads shall be secured against displacement with adhesives approved by the Engineer. Pads shall be incidental to concrete and will not be paid for separately.
11 - Forms for all exposed surfaces of separation structures and surfaces of retaining walls visible from a traveled way or from a populated area shall be plywood except that metal forms may permitted provided a surface finish satisfactory to the Engineer can be obtained and the use of such forms is approved in writing by the Engineer. Forms for round columns shall be made of materials that will give a smooth finish and true dimensions as given in the plans. Forms for prestressed concrete members shall be either metal or plywood.
12 - Gothic letters and figures approximating dimensions shown will be acceptable if approved by the Engineer.
13 - The contractor shall verify the location of all existing utility lines and notify the respective owners before commencing work of excavation or driving of piles.
14 - Standard Detail Drawings refer to all structures in general, except for modifications as may be required for special conditions. For such modifications refer to the corresponding detailed drawings.

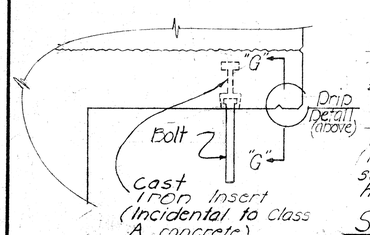

DETAIL of PIPE HANGERS & INSERTS

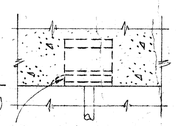

SECTION "G-G"

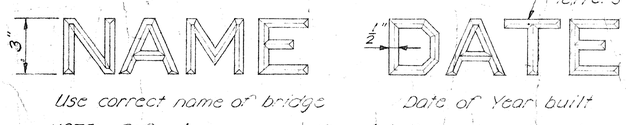

NOTE: Refer to corresponding detail drawings for placement of such names & dates at end post.
Exact details & spacing of letters & figures shall be as directed by the Engineer. See Note #12

TYPICAL DETAIL OF LETTERS & FIGURES AT CONCRETE END POST

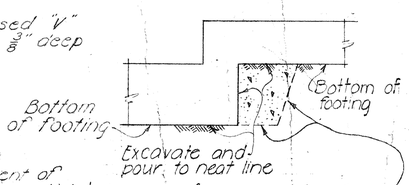

Note! In case of over excavation, the contractor shall backfill this area with minimum class "D" concrete at his own expense.

TYPICAL EXCAVATION FOR CONTINUOUS FOOTING STEP-UP

APPROVAL RECOMMENDED:
Paul T. Yamashita — BRIDGE DESIGN ENGINEER — 1-23-70 DATE

APPROVED
Paul T. Yamashita — For ASSISTANT CHIEF, ENGINEERING — 1-28-70 DATE

NO.	REVISION	APPROVED BY	DATE

STATE OF HAWAII
DEPARTMENT OF TRANSPORTATION
HIGHWAYS DIVISION

STANDARD DETAILS

NOTES AND MISCELLANEOUS DETAILS

Date: October 1969

SHEET No. 51 OF 6 SHEETS DB-100

ORIGINAL PLAN	SURVEY PLOTTED BY	DRAWN BY T.M.	TRACED BY	DESIGNED BY	QUANTITIES BY	CHECKED BY	DATE
NOTE BOOK	No.						

PRINTED ON NO. 1000H CLEARPRINT

54

FED. ROAD DIST. NO.	STATE	FED. AID PROJ. NO.	FISCAL YEAR	SHEET NO.	TOTAL SHEETS
HAWAII	HAW.	RF-056-1(10)	1971	55	74

CURVE DATA

Δ = 40° 06' 25"
R = 10.0'
Lc = 7.0'

** Dimensions as detailed except as otherwise noted on Detailed Drawings.

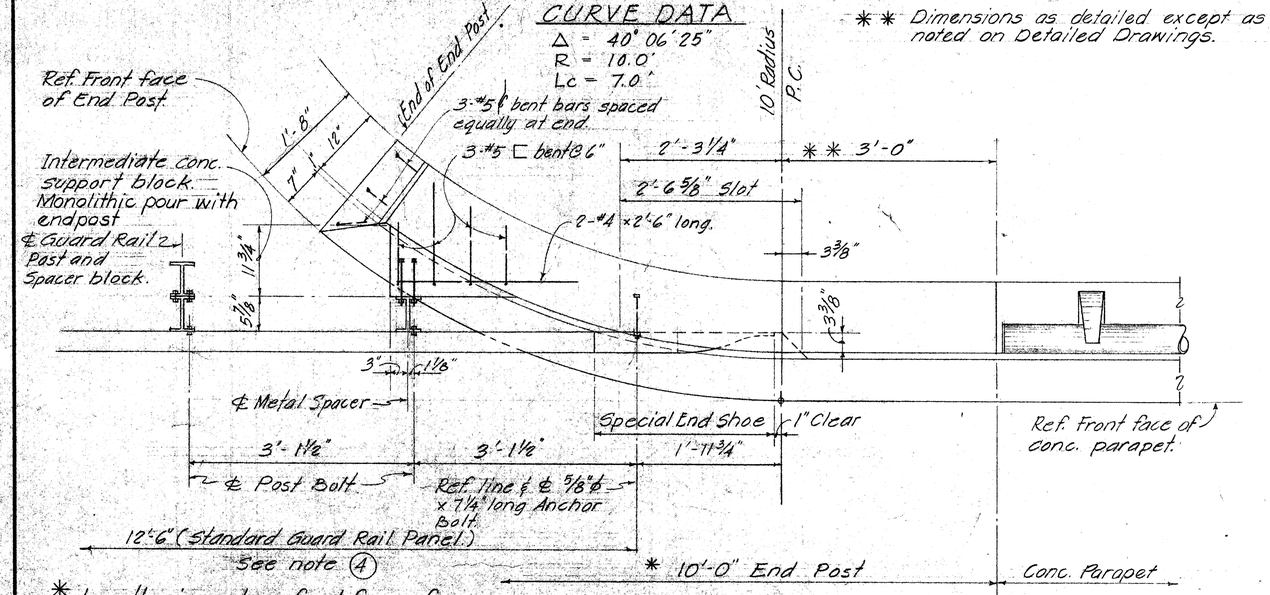

* Length given along front face of parapet and end post.

PLAN
Scale: 1" = 1'-0"

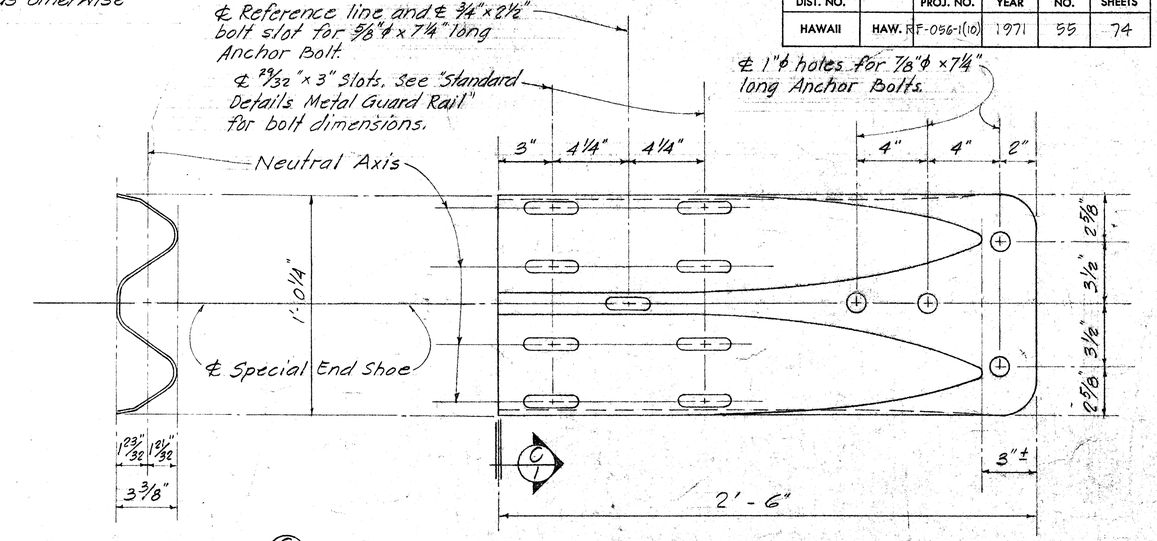

SECTION (C/1)

ELEVATION

SPECIAL END SHOE DETAILS
Scale: 3" = 1'-0"

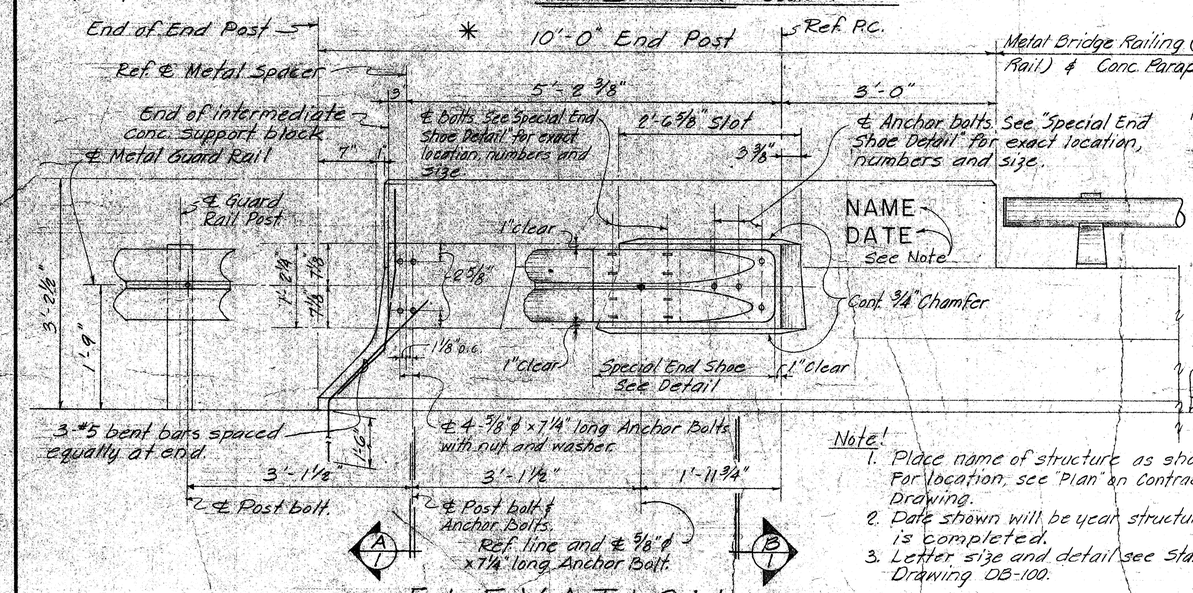

ELEVATION
Scale: 1" = 1'-0"

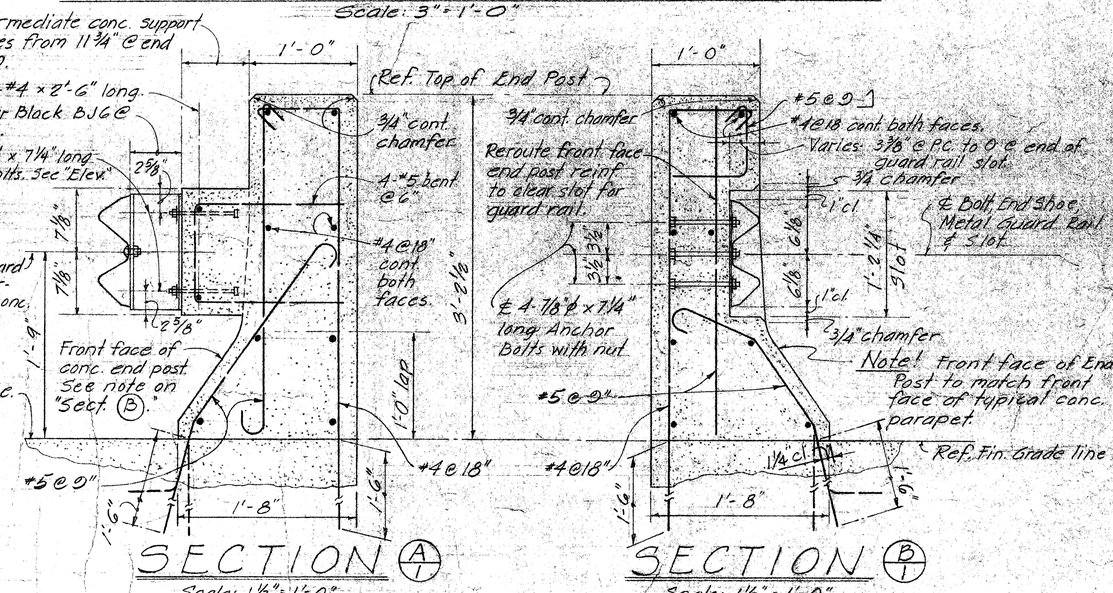

SECTION (A/1)
Scale: 1 1/2" = 1'-0"

SECTION (B/1)
Scale: 1 1/2" = 1'-0"

Note!
1. Place name of structure as shown. For location, see "Plan" on Contract Drawing.
2. Date shown will be year structure is completed.
3. Letter size and detail see Standard Drawing DB-100.

NOTES:

1. All Anchor Bolts shall be High Strength bolts conforming to the requirements of ASTM A325.
2. All Shoe assembly, including anchor bolts, nuts and washers, shall be galvanized.
3. Special End Shoe shall be fabricated from 10 gage steel conforming to the requirements of AASHO 180.
4. First Guard Rail Panel adjoining "Special End Shoe" shall be of galvanized steel. See Specifications for requirements.
5. Anchor Bolt length given from under bolt head.

NO.	REVISION	APPROVED BY	DATE

APPROVAL RECOMMENDED: Paul T. Yamashita — BRIDGE DESIGN ENGINEER — DATE 1-23-70

APPROVED: Paul T. Yamashita — For ASSISTANT CHIEF ENGINEERING — DATE 1-24-70

STATE OF HAWAII
DEPARTMENT OF TRANSPORTATION
HIGHWAYS DIVISION

STANDARD DETAILS
METAL GUARD RAIL CONNECTION
ONE RAIL COMBINATION TYPE END POST

Date

SHEET No. 52 OF 6 SHEETS DB-205

ORIGINAL PLAN	SURVEY PLOTTED BY	DATE
	DRAWN BY	
	TRACED BY	
NOTE BOOK	DESIGNED BY	
	QUANTITIES BY	
No.	CHECKED BY	

55 55

FED. ROAD DIST. NO.	STATE	FED. AID PROJ. NO.	FISCAL YEAR	SHEET NO.	TOTAL SHEETS
HAWAII	HAW.	RF-056-1(10)	1971	56	74

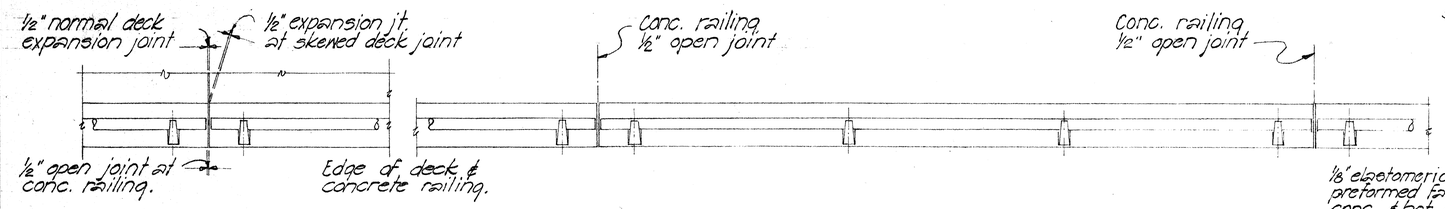

AT DECK EXPANSION JOINT

INTERMEDIATE

RAILING PLAN SCALE 3/8" = 1'-0"

* * Note !!

1. The contractor shall layout the railing to provide 3 cont. panels whenever possible. 2 or 4 cont. panels will be permitted to complete the layout when 3 cont. panels cannot be made. Single panels will not be permitted.
2. Rail Posts shall be normal to grade.
3. Provide double posts at each expansion jt., fixed bridge jt., continuous support, and as shown on detailed drawing.

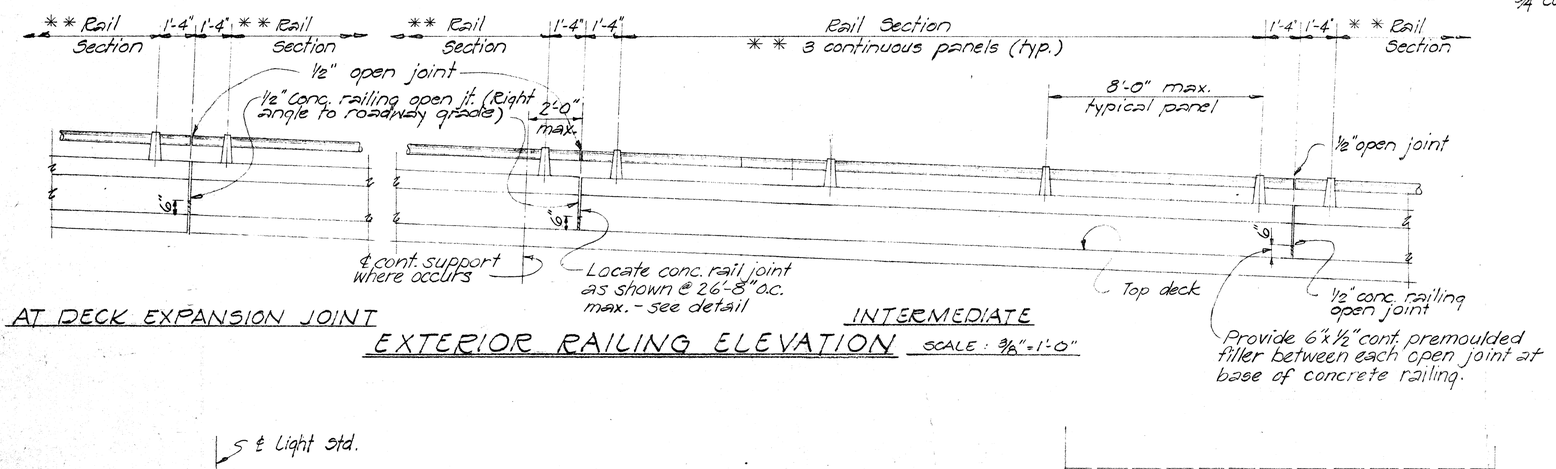

AT DECK EXPANSION JOINT

INTERMEDIATE

EXTERIOR RAILING ELEVATION SCALE: 3/8" = 1'-0"

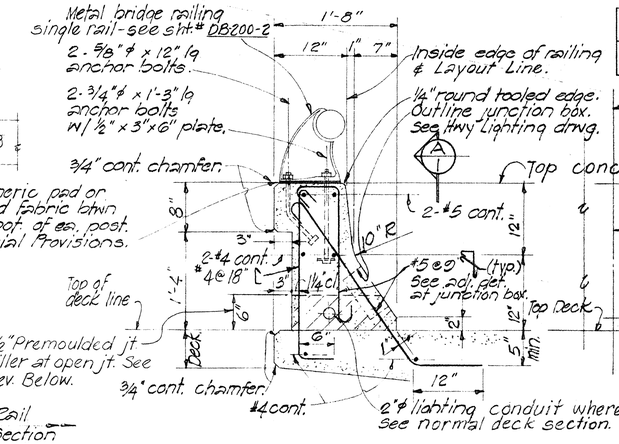

TYPICAL CONCRETE RAILING SECTION

SCALE: 1" = 1'-0"

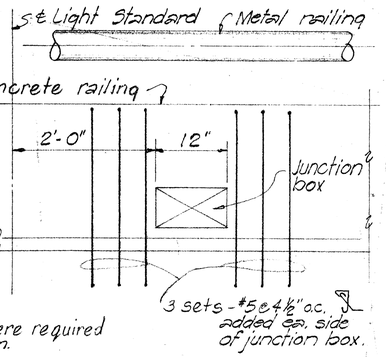

ELEVATION (A/1) SHOWING SPECIAL REINFORCEMENT AT JUNCTION BOX

SCALE: 1" = 1'-0"

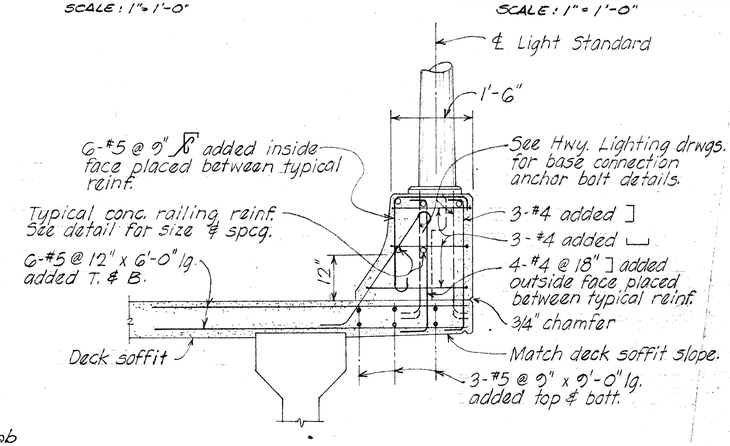

SECTION (C/1)

Scale: 3/4" = 1'-0"

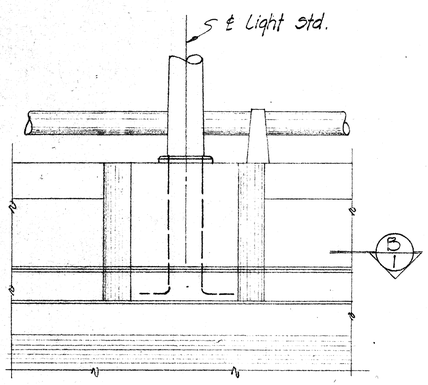

PART ELEVATION

SCALE: 3/4" = 1'-0"

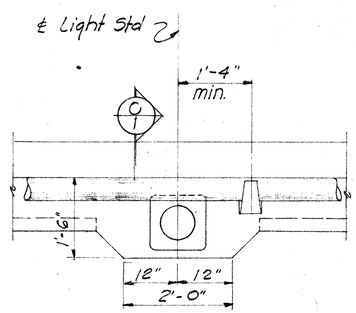

PART PLAN

SCALE: 3/4" = 1'-0"

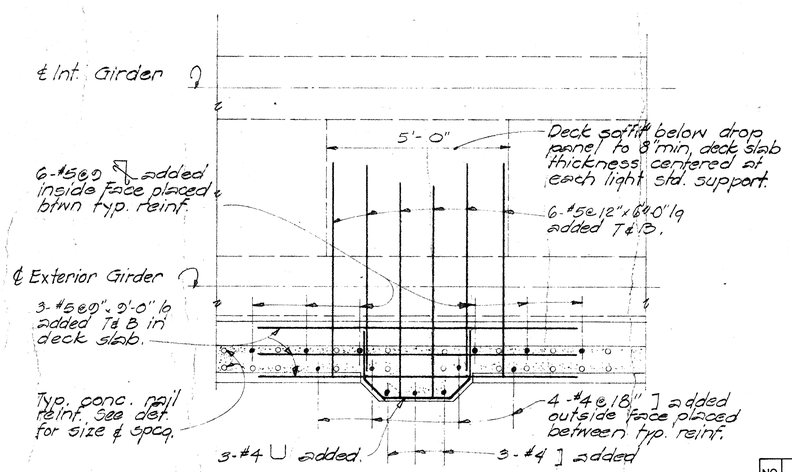

SECTION (B/1)

SCALE: 1/2" = 1'-0"

DETAILS OF RAILING AT LIGHT STANDARD

SCALE AS NOTED

APPROVAL RECOMMENDED:
Paul T. Yamashita — BRIDGE DESIGN ENGINEER — 1-23-70 DATE

APPROVED
Paul T. Yamashita — For ASSISTANT CHIEF, ENGINEERING — 1-28-70 DATE

NO.	REVISION	APPROVED BY	DATE

STATE OF HAWAII
DEPARTMENT OF TRANSPORTATION
HIGHWAYS DIVISION

STANDARD DETAILS
METAL BRIDGE RAILING
ONE RAIL COMBINATION TYPE
ON PARAPET

Date: October 1969

SHEET No. S3 OF 6 SHEETS DB-200-1

ORIGINAL PLAN	SURVEY PLOTTED BY	DATE
	DRAWN BY	
	TRACED BY	
NOTE BOOK	DESIGNED BY	
No.	QUANTITIES BY	
	CHECKED BY	

PRINTED ON NO. 1000H CLEARPRINT

55 (6)

FED. ROAD DIST. NO.	STATE	FED. AID PROJ. NO.	FISCAL YEAR	SHEET NO.	TOTAL SHEETS
HAWAII	HAW.	F-056-1(8)	1971	57	74

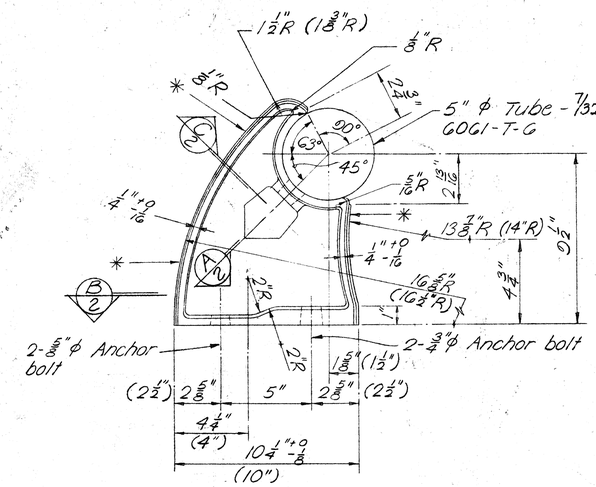

SIDE ELEVATION

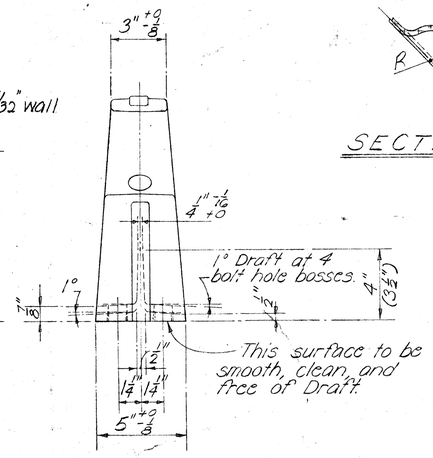

END ELEVATION

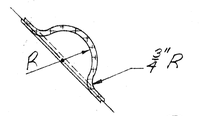

SECTION (C/2)

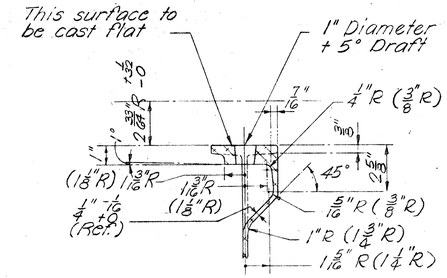

SECTION (A/2)

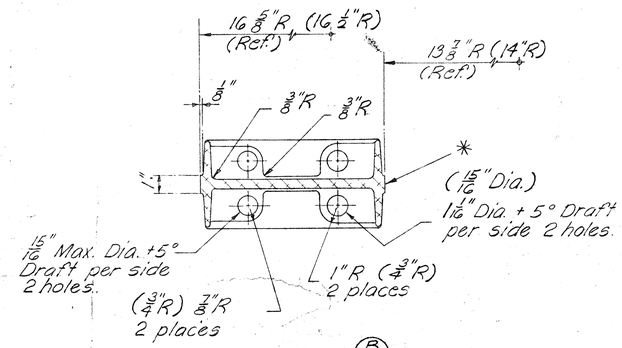

SECTION (B/2)

NOTE:

TOGGLE BOLT

Cadmium plating on steel - Type NS 0.0005" thick ASTM - A165. (all parts).

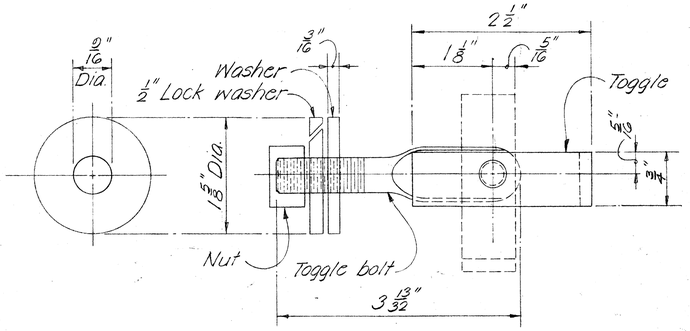

WASHER

SIDE ELEVATION ASSEMBLAGE

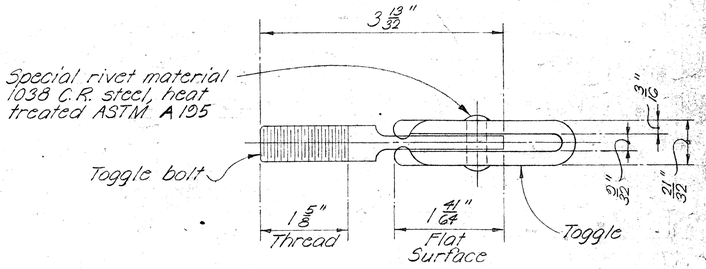

TOP PLAN

½" φ STEEL TOGGLE BOLT DETAILS

Full Scale

NOTE:

* Casting to be supplied with a standard scratch brush finish on entire gating rib surface and as indicated by an asterisk (*). Finish shall be approved by the Engineer.

Casting to be neatly trimmed and any protruding flash to be broken off. Unless otherwise specified, draft angles to be 3°, corner radii to be 3/32"R, fillet radii to be ⅛"R, casting tol. to be ±1/16", wall thickness to be ±1/32".

Dimensions may be as shown or as shown in parenthesis ( ).

TYPICAL RAIL POST DETAILS

Scale: 3" = 1'-0"

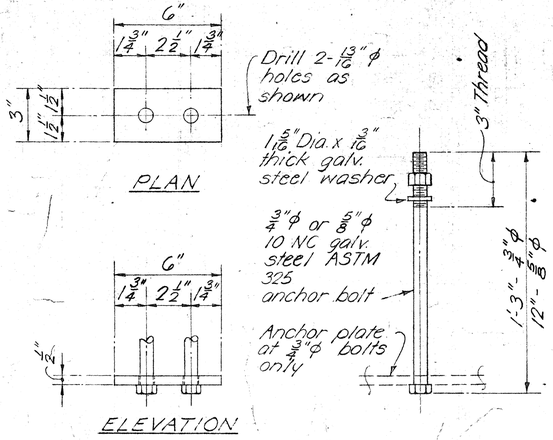

ANCHOR PL DETAIL ANCHOR BOLT

TYPICAL RAIL POST

STEEL ANCHOR BOLT ASSEMBLY

Scale: 3" = 1'-0"

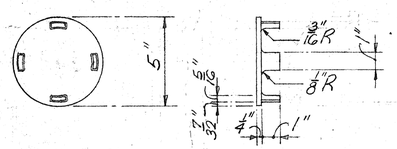

All draft angles = 3°

RAIL CAP DETAIL

Scale: 3" = 1'-0"

GENERAL NOTES:

Metal bridge railing shown is for Aluminum bridge railing. See Specifications for alternate railing in steel.

APPROVAL RECOMMENDED: Paul T. Yamashita — BRIDGE DESIGN ENGINEER — 1-23-70 DATE

APPROVED For Paul T. Yamashita — ASSISTANT CHIEF, ENGINEERING — 1-28-70 DATE

NO.	REVISION	APPROVED BY	DATE

STATE OF HAWAII
DEPARTMENT OF TRANSPORTATION
HIGHWAYS DIVISION

STANDARD DETAILS
METAL BRIDGE RAILINGS
ONE RAIL COMBINATION TYPE ON PARAPET

Scale as noted Date:

SHEET No. 54 OF 6 SHEETS DB-200-2

ORIGINAL PLAN	SURVEY PLOTTED BY	DATE
	DRAWN BY	
	TRACED BY	
NOTE BOOK	DESIGNED BY	
	QUANTITIES BY	
No.	CHECKED BY	

PRINTED ON NO. 1050H CLEARPRINT

FED. ROAD DIST. NO.	STATE	FED. AID PROJ. NO.	FISCAL YEAR	SHEET NO.	TOTAL SHEETS
HAWAII	HAW.	BF-056-1(6)	1971	58	74

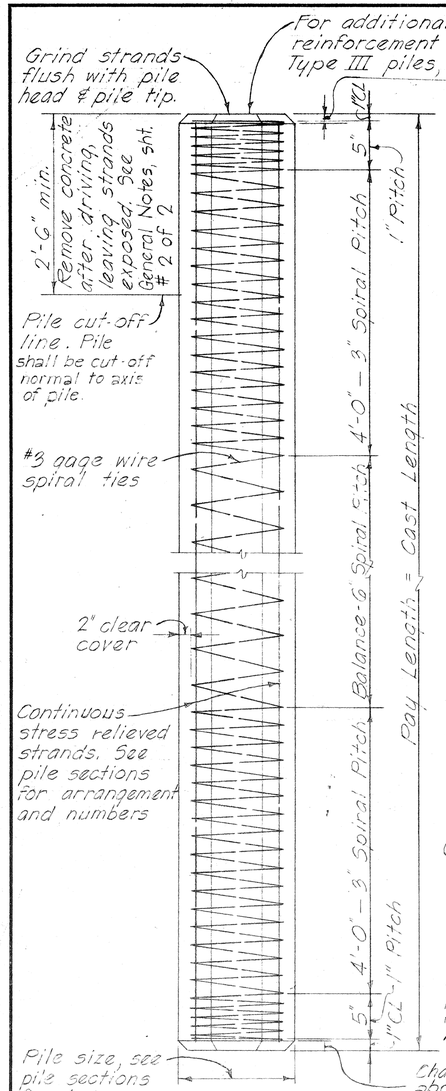

TYPICAL PILE DETAIL

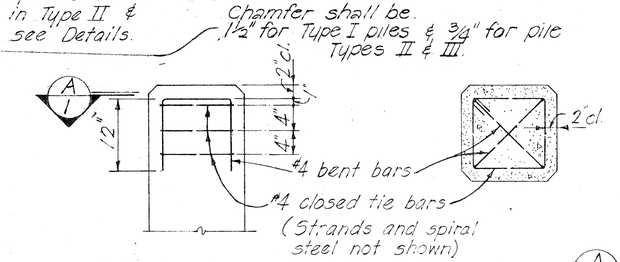

PART ELEVATION SECTION A/1

TYPICAL ADDED REINFORCEMENT PILE ENDS - TYPE II & III ONLY

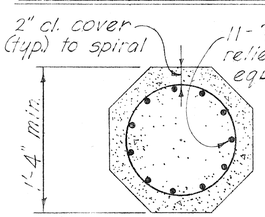

Note: All types of pile spiral reinforcement shall be cold drawn steel wire ASTM A 82

TYPE I

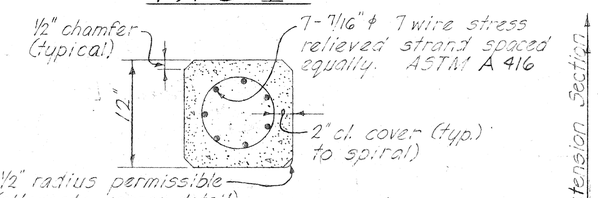

TYPE II

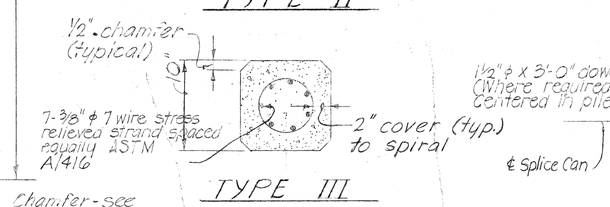

TYPE III

TYPICAL SECTIONS THRU PILES

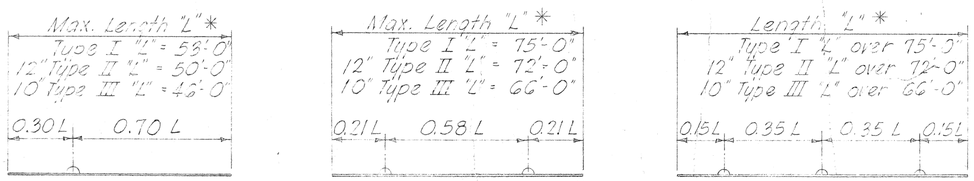

* The length "L" is the distance end to end of pile.

1 POINT PICK-UP 2 POINT PICK-UP 3 POINT PICK-UP

NOTE: Unless special lifting devices are attached for pick-up points, pick-up points shall be plainly marked on all piles after removal of the forms and all lifting shall be done at these points.
The use of special embedded or attached lifting devices, the employment of other pick-up points or any other method of pick-up shall be subject to approval by the Engineer.

NOTE:
Concrete in pile build-ups without driving shall be Class A Concrete. Concrete in pile build-ups with driving shall have a minimum compressive cylinder strength f'c of 5000 p.s.i. at 28 days. Build-ups may be driven if the specimen of concrete from which the piles were poured develops a strength of at least 3500 p.s.i. but not earlier than 7 days.

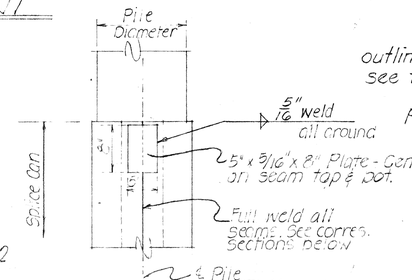

PART ELEV. C/1
(TYP. CAN SPLICE PL)

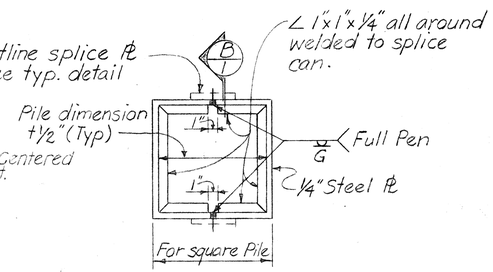

TYPE II & III

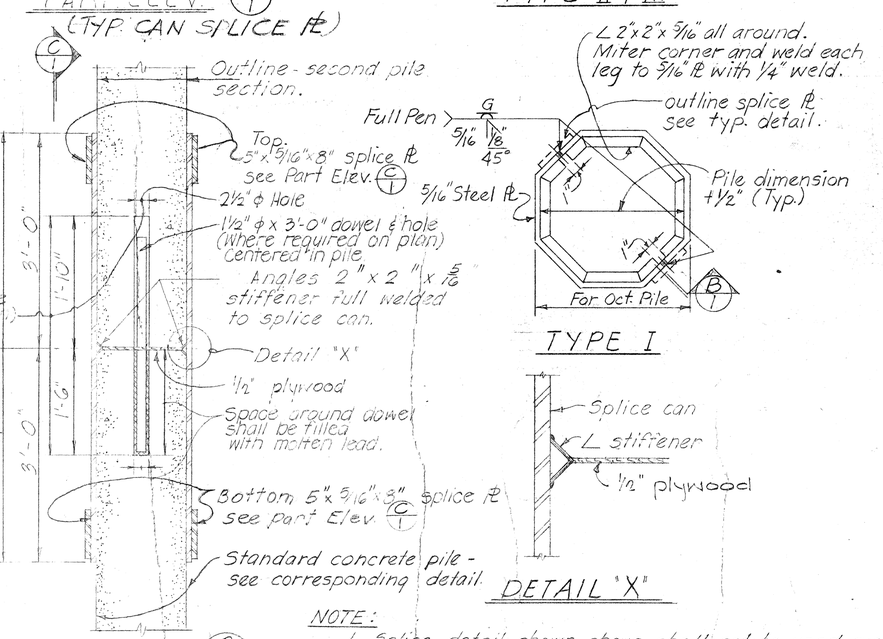

SECTION B/1

NOTE:
1. Splice detail shown above shall not be used except for pile length in excess of 100'-0" long.
2. Structural steel for splice can shall be ASTM A36.

TYPICAL PILE SPLICE DETAILS
(FOR PRESTRESSED CONCRETE PILES WHEN CAST IN TWO OR MORE SECTIONS)

NOTE: All welding shall conform to the Specifications for "Welded Highway and Railway Bridges" of the American Welding Society.

NO.	REVISION	APPROVED BY	DATE

APPROVAL RECOMMENDED:
Paul T. Yamashita 1-23-70
BRIDGE DESIGN ENGINEER DATE

APPROVED
Paul T. Yamashita 1-28-70
for ASSISTANT CHIEF, ENGINEERING DATE

STATE OF HAWAII
DEPARTMENT OF TRANSPORTATION
HIGHWAYS DIVISION
STANDARD DETAILS
PRESTRESSED CONCRETE PILES
Date

SHEET No. 55 OF 6 SHEETS DB-300-1

ORIGINAL PLAN | SURVEY PLOTTED BY | DRAWN BY | TRACED BY | DESIGNED BY | QUANTITIES BY | CHECKED BY | DATE | NOTE BOOK No.

PRINTED ON NO. 1000H CLEARPRINT

55

FED. ROAD DIST. NO.	STATE	FED. AID PROJ. NO.	FISCAL YEAR	SHEET NO.	TOTAL SHEETS
HAWAII	HAW.	RF-056-1(10)	1971	59	74

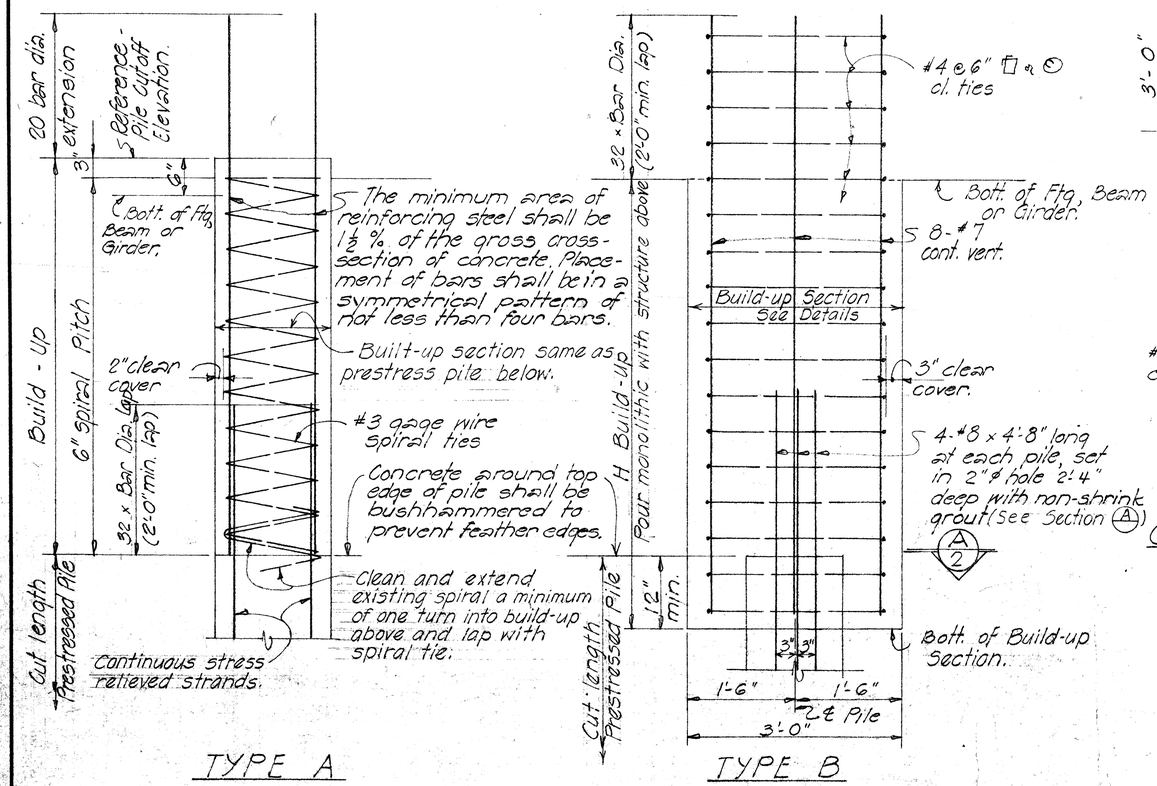

TYPE A

TYPE B

Notes:

Selection of pile build-up type without driving to be determined by the Engineer.

When height of depressed portion of footing (H) exceeds 4", the depressed section shall be poured separately from the main body of the footing.

Depressed portion of footing may be omitted for pile heads embedded at least 4" into footing provided at least 90% of the piles in each footing have the minimum embedment into footing as shown in contract plans.

WITHOUT DRIVING
TYPICAL PILE BUILD-UP DETAILS

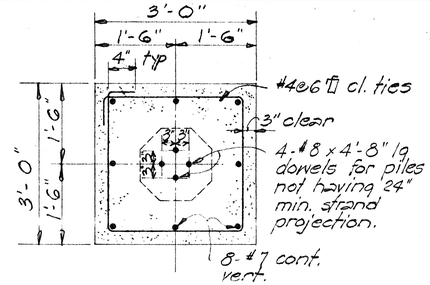

SQUARE BUILD-UP

Note:

Circular section may be used instead of square section if approved by the Engineer.

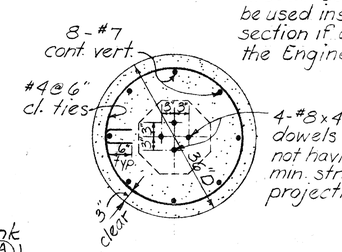

CIRCULAR BUILD-UP SECTION A/2

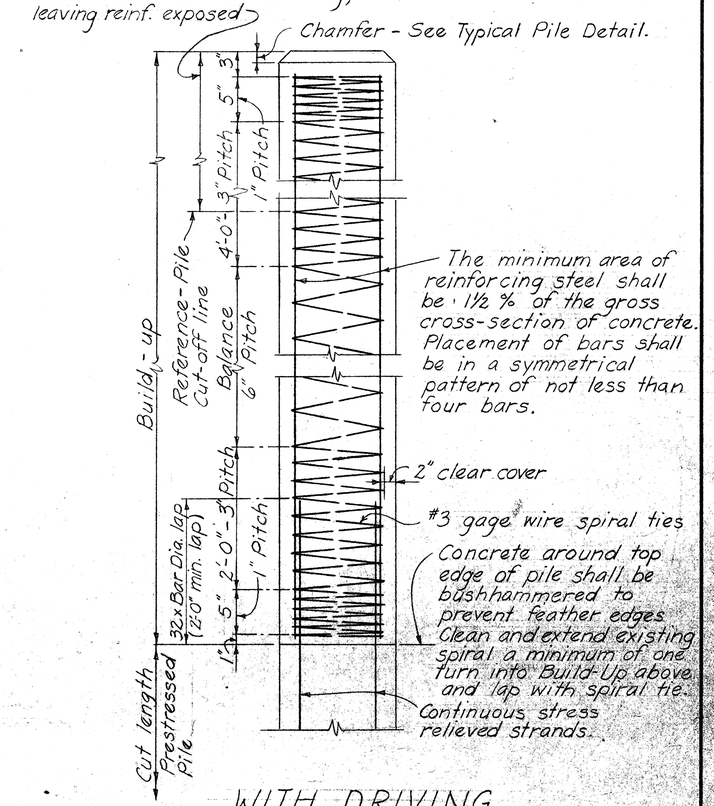

WITH DRIVING
TYPICAL PILE BUILD-UP DETAIL

GENERAL NOTES

1. Work of cutting off prestressed conc. piles or concrete build-ups shall be performed in such a manner as to avoid spalling or damaging the pile below cut-off. In case of such damage, the pile shall be replaced or repaired by the Contractor at his expense as directed by the Engineer.

2. Portion of pile embedded into footing shall be of sound concrete. Damaged portions shall be removed and pile cut-off elevation lowered as required by the Engineer.

APPROVAL RECOMMENDED: Paul T. Yamashita — BRIDGE DESIGN ENGINEER — 1-23-70 DATE

APPROVED: Paul T. Yamashita — For ASSISTANT CHIEF, ENGINEERING — 1-28-70 DATE

NO.	REVISION	APPROVED BY	DATE

STATE OF HAWAII
DEPARTMENT OF TRANSPORTATION
HIGHWAYS DIVISION

STANDARD DETAILS

PRESTRESSED CONCRETE PILES

Date: Oct. 1968

SHEET No. 56 OF 6 SHEETS DB-300-2

ORIGINAL PLAN | SURVEY PLOTTED BY | DRAWN BY | TRACED BY | DESIGNED BY | QUANTITIES BY | CHECKED BY | NOTE BOOK No. | DATE

PRINTED ON NO. 1000H CLEARPRINT

59