FED. ROAD DIST. NO.	STATE	PROJ. NO.	FISCAL YEAR	SHEET NO.	TOTAL SHEETS
HAWAII	HAW.	BD 63-381 Unit 2	1969	2	3

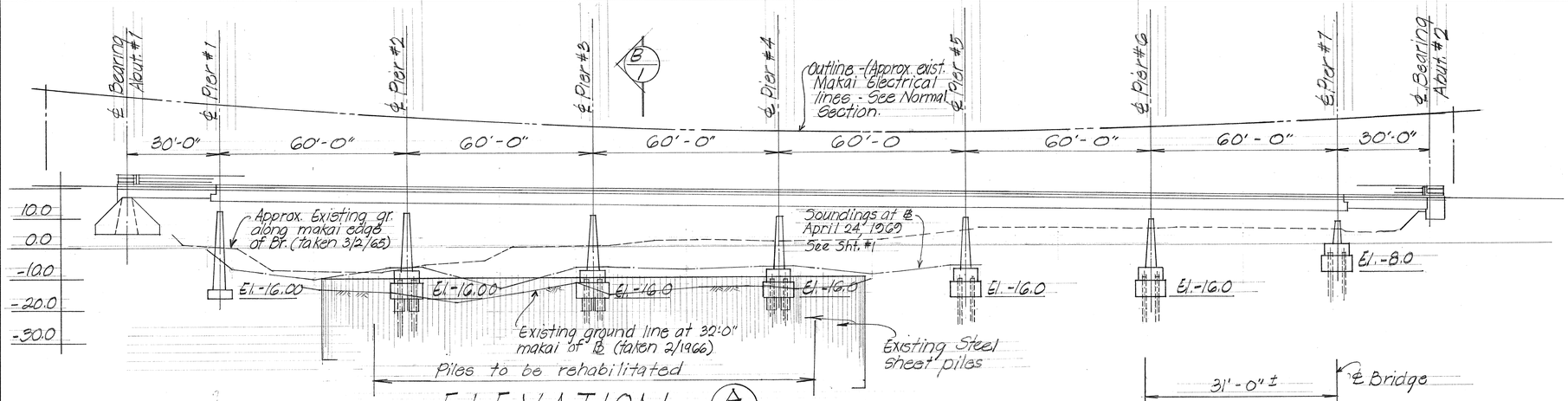

ELEVATION (A/1)

Scale: 1" = 20'-0"

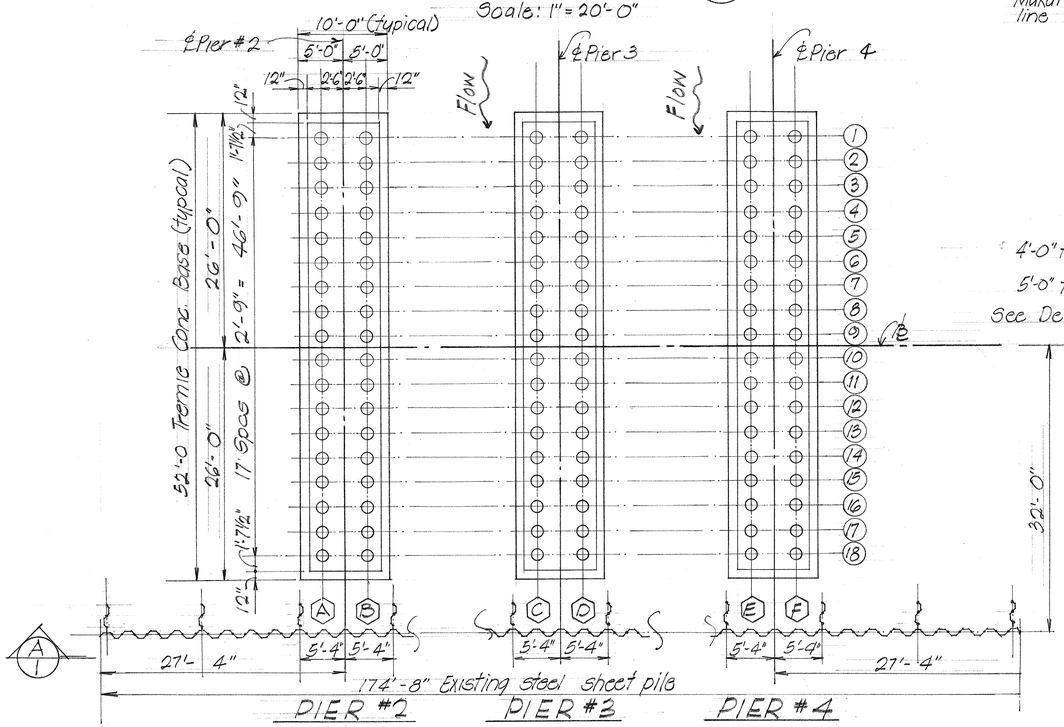

PART EXIST. PILE LAYOUT PLAN

Scale: 1/8" = 1'-0"

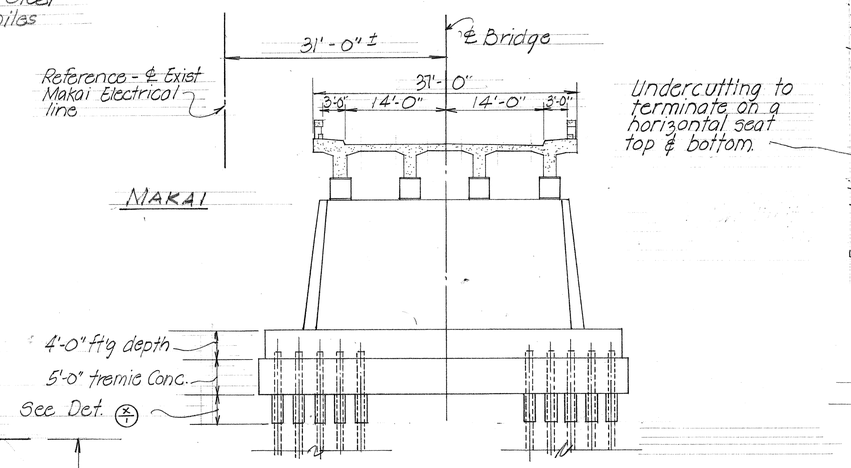

NORMAL SECTION (B/1) thru EXISTING BRIDGE

Scale: 1" = 10'-0"

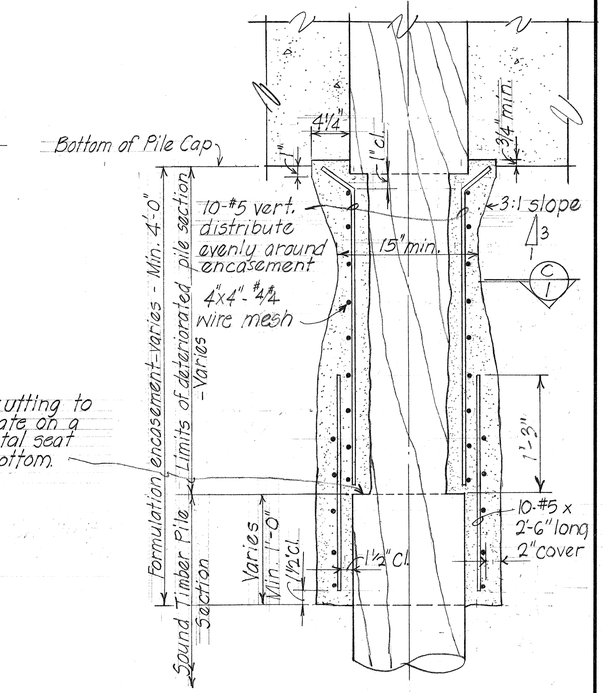

Undercutting to terminate on a horizontal seat top & bottom.

AT DETERIORATED PILES

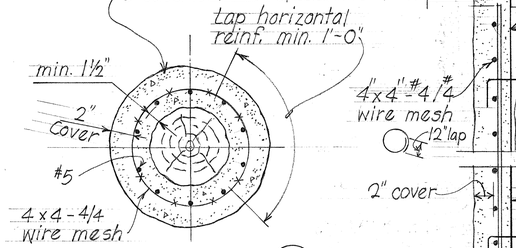

SECTION (C/1)

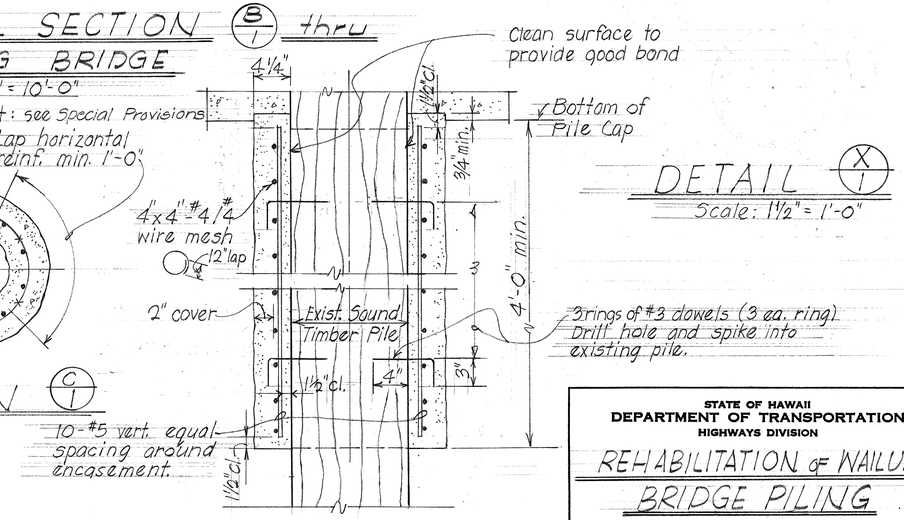

DETAIL (X/1)

Scale: 1½" = 1'-0"

AT UNDETERIORATED SOUND PILES

GENERAL NOTES

1. Encasement shall be "M.M-1" special underwater formulation or "All-Crete."
2. Reinforcing to be adequately supported during application of formulation to maintain min. cover and clearances.

STATE OF HAWAII
DEPARTMENT OF TRANSPORTATION
HIGHWAYS DIVISION

REHABILITATION OF WAILUA BRIDGE PILING

Proj. No BD-63-381 Unit 2 Date: June '69

SHEET No. 1 OF 1 SHEETS

ORIGINAL		DATE
	SURVEY PLOTTED BY	
	TRACED BY	
PLAN	DESIGNED BY	
	QUANTITIES BY	
NOTE BOOK	CHECKED BY	
No.		

K+E CRYSTALENE® LA 2920 TRACING PAPER

ALL-CRETE