FED. ROAD DIST. NO.	STATE	FED. AID PROJ. NO.	FISCAL YEAR	SHEET NO.	TOTAL SHEETS
HAWAII	HAW.	F-051-1(8)	1986	52	62

Note: Reinforcing Steel for Concrete Railing shall be considered incidental to Concrete Railing and End Post.

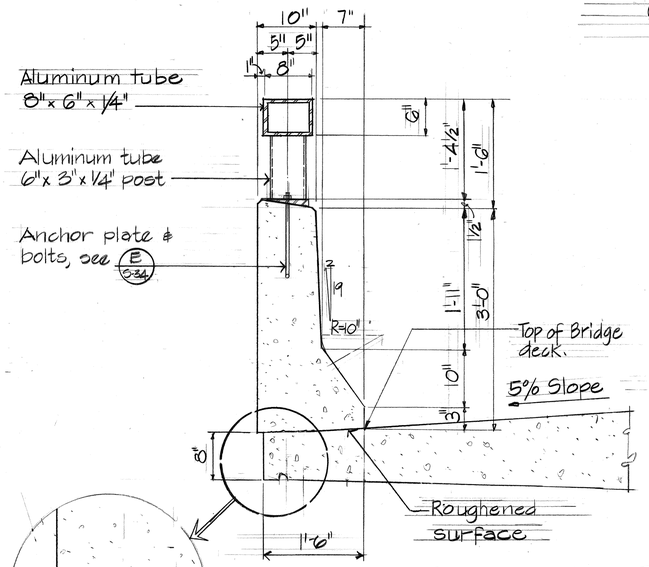

CONCRETE RAILING (A S-35)
Scale: 1" = 1'-0"

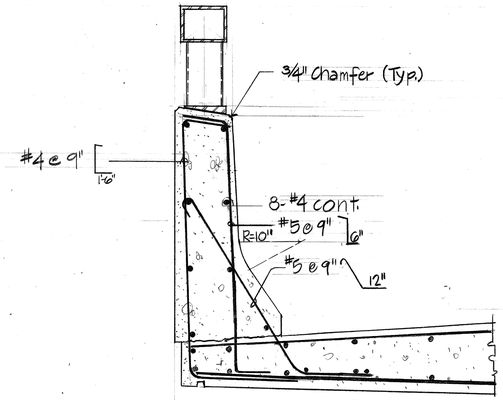

TYPICAL REINF. DETAIL (B S-35)
Scale: 1" = 1'-0"

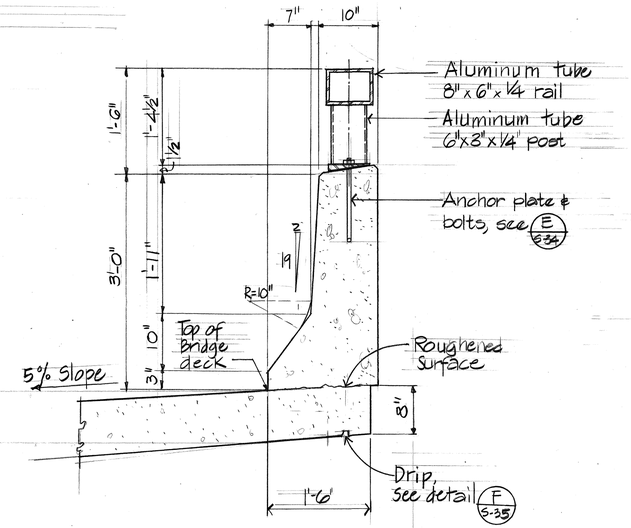

CONCRETE RAILING (C S-35)
Scale: 1" = 1'-0"

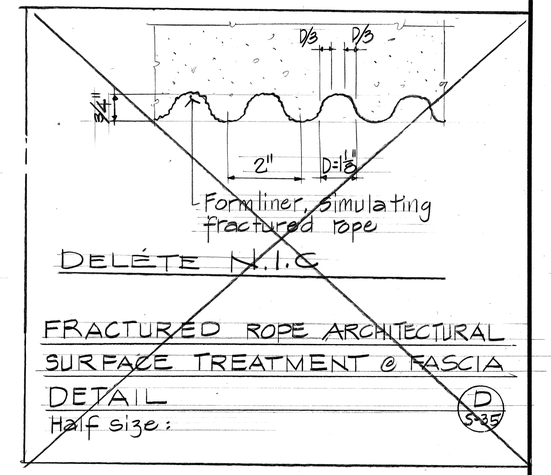

(D S-35)

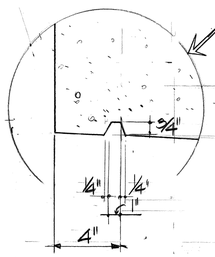

DRIP DETAIL (F S-35)
Scale: 3" = 1'-0"

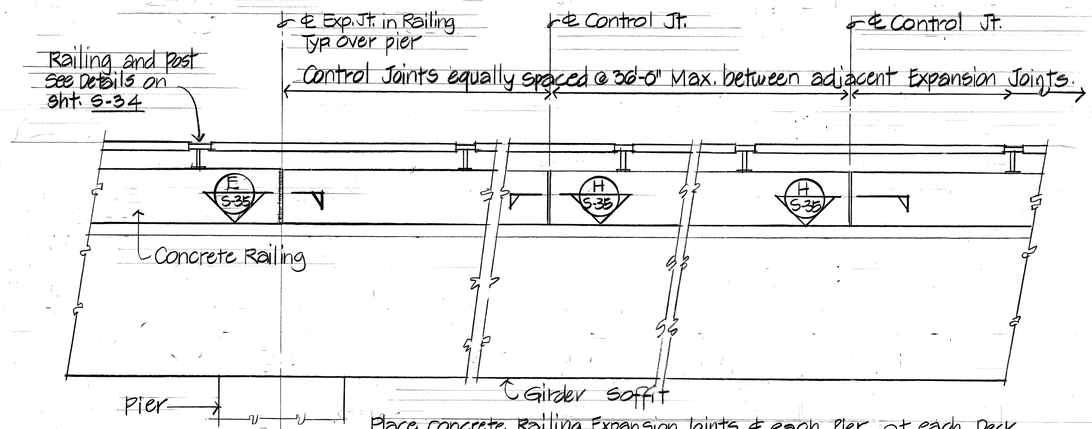

Place concrete Railing Expansion Joints ℄ each Pier, at each Deck Expansion Joint and at locations as shown on Concrete Railing Post plan, sht. S-34. Control Joints shall be equally spaced between Expansion Joints at 36'-0" Maximum ea.

RAILING ELEVATION (G S-35)
N.T.S.

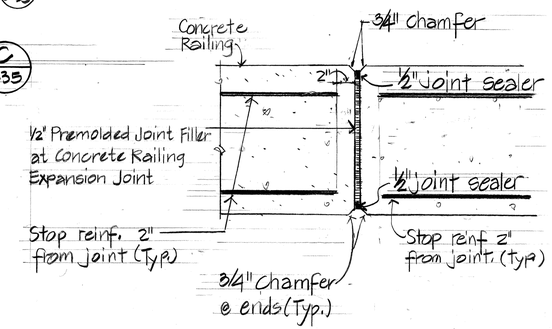

EXPANSION JOINT DETAIL (E S-35)
Scale: 1 1/2" = 1'-0"

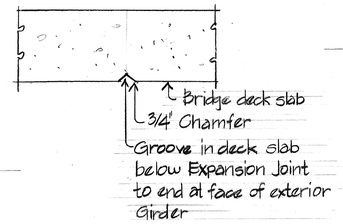

DECK DETAIL (J S-35)
N.T.S.

Joints may be formed with 1/8" masonite and cut back to the root of the Chamfer on the exposed face.

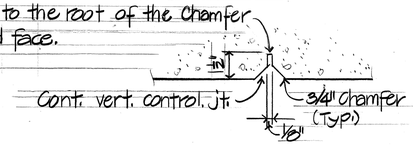

DETAIL (K S-35)
Scale: 3" = 1'-0"

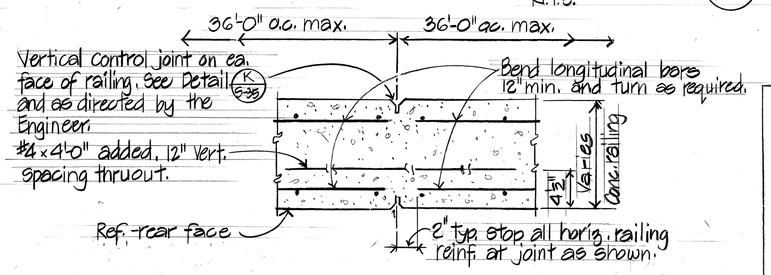

CONTROL JOINT DETAIL (H S-35)
Scale: 1 1/2" = 1'-0"

ORIGINAL PLAN	SURVEY PLOTTED BY	DATE
	DRAWN BY	"
	TRACED BY	"
NOTE BOOK	DESIGNED BY	"
	QUANTITIES BY	"
No.	CHECKED BY	"

DATE	REVISION

MYRON G. OKUBO REGISTERED PROFESSIONAL ENGINEER No. 4320 HAWAII, U.S.A.

THIS WORK WAS PREPARED BY ME OR UNDER MY SUPERVISION.

Myron Okubo
Signature

STATE OF HAWAII
DEPARTMENT OF TRANSPORTATION
LAND TRANSPORTATION FACILITIES DIVISION

RAILING-SECTIONS AND DETAILS

HANAMAULU VIADUCT
HANAMAULU-AHUKINI CUTOFF ROAD
Ahukini Road to Kauai Hardwoods
PROJECT NO. F-051-1(8)

SCALE: AS SHOWN DATE: JULY 1985

SHEET NO. S-35 OF S-39 SHEETS