FED. ROAD DIST. NO.	STATE	PROJ. NO.	FISCAL YEAR	SHEET NO.	TOTAL SHEETS
HAWAII	HAW.	LT-K-05-78	1984	L-8	12

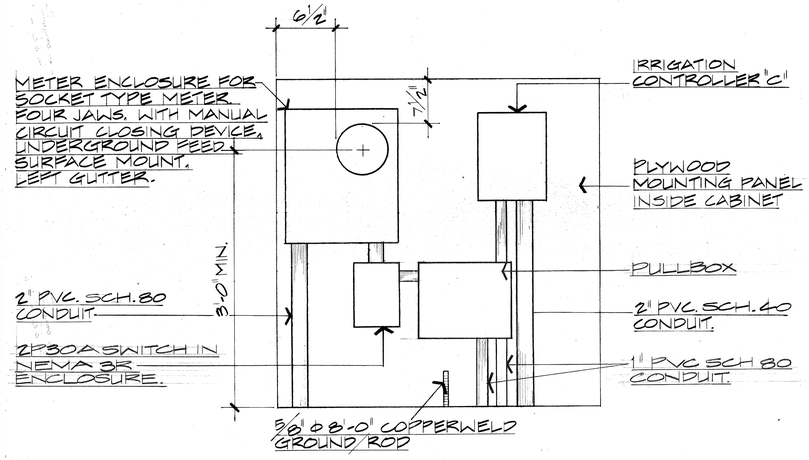

EQUIPMENT MOUNTING DETAIL
NOT TO SCALE.
CONTROLLER "C" ONLY

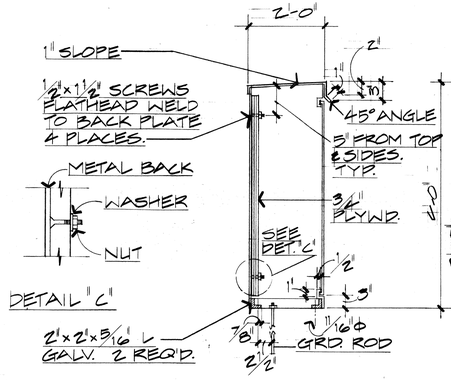

DETAIL "C"

SECTION "A"

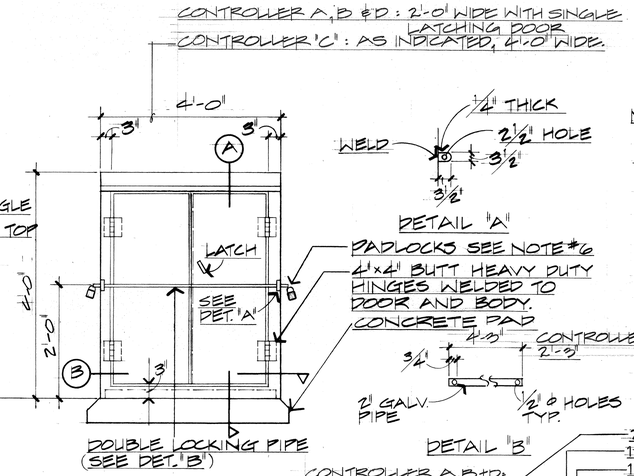

ELEVATION

DETAIL "A"

DETAIL "B"

NOTES:

1. CABINET TO BE PRIMED WITH ONE COAT SHOP PRIMER.
2. PLYWOOD TO BE TREATED (WOLMANIZED) PLYWOOD.
3. MADE FROM 10 GA. GALV. SHEET METAL.
4. ACRYLIC FINISH PAINT AS SELECTED BY ENGINEER OR OFFICER-IN-CHARGE.
5. ENCLOSURE SHALL BE NEMA 3R.
6. PADLOCKS.

CONTROLLER A,B+D: 1 - KELO FURNISH.
1 - DEPARTMENT OF TRANSPORTATION FURNISH.

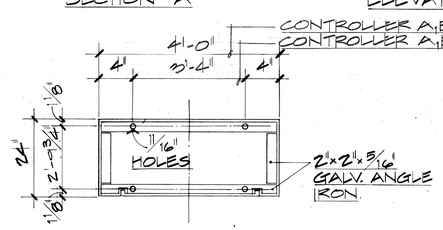

SECTION "B" (ANGLE FRAME)

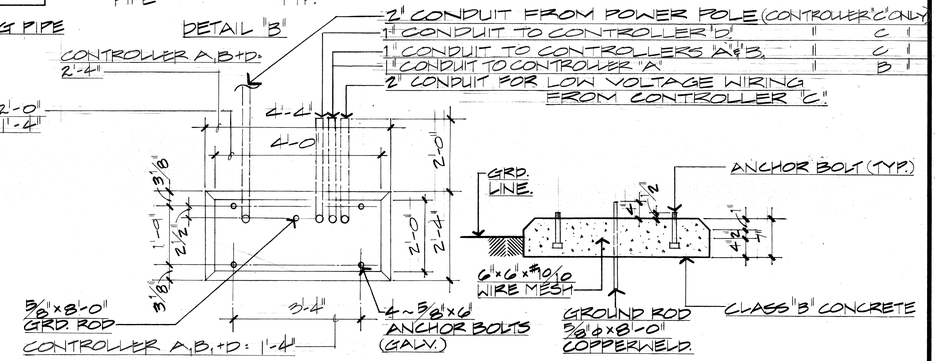

PLAN

FRONT & REAR ELEVATION

CONCRETE PAD

CONTROLLER INSTALLATION / NEMA 3R 2 DOOR 48" W x 48" H x 24" D / 1 DOOR 24" W x 48" H x 24" D
COMBINATION METER & EQUIPMENT CABINET DETAIL

INSTALL ALL CONTROLLERS (A,B,C & D) 2'-0" FROM EDGE OF RIGHT-OF-WAY.

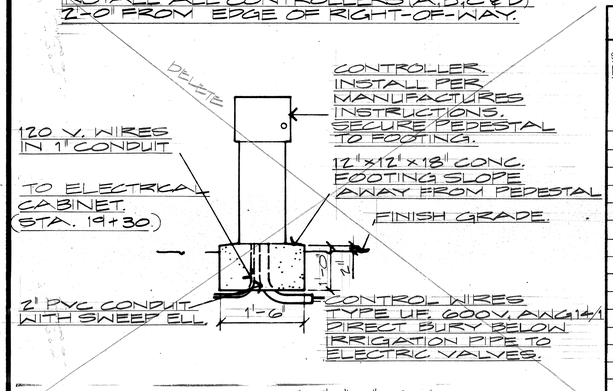

CONTROLLER "A", "B", & "D"

CONTROLLER SCHEDULE

STATION NUMBER	CONTROLLER "A" START TIME: 9PM ALTERNATE DAYS.	CONTROLLER "B" START TIME: 1AM SAME NIGHT AS CONTROLLER "A"	CONTROLLER "C" START TIME: 9PM ALTERNATE DAYS, OPPOSITE CONTROLLER "A"	CONTROLLER "D" START TIME: 1AM ALTERNATE DAYS, SAME NIGHT AS CONTROLLER "C"
	MINUTES:			
1	10	10	10	10
2	"	"	"	"
3	"	"	"	"
4	"	"	"	"
5	"	"	"	"
6	"	"	"	"
7	"	"	"	"
8	"	"	"	"
9	"	"	"	"
10	"	"	"	"
11	"	"	"	"
12	"	10	"	"
13	10	20 MIN., 2x EVERYDAY	"	"
14	20 MIN., 2x EVERYDAY	SPARE	10	10
15	" " " "	"	20 MIN., 2x EVERYDAY	20 MIN., 2x EVERYDAY
16	" " " "	"	" " " "	" " " "
17	" " " "	"	" " " "	" " " "
18	" " " "	"	" " " "	" " " "
19	" " " "	"	" " " "	" " " "
20	SPARE	"	SPARE	SPARE
21	"	"	"	"
22	"	"	"	"
23	"	"	"	"

NOTE:
DOT REQUESTS ALL CONTROLLERS IN METAL CABINETS - CORROSION PROTECTION.

THIS WORK WAS PREPARED BY ME OR UNDER MY SUPERVISION.
P.K. Kutlan 3/21/84

MELVIN K. F. LAU
REGISTERED PROFESSIONAL LANDSCAPE ARCHITECT
No. 2804
HAWAII, U.S.A.

THIS WORK WAS PREPARED BY ME OR UNDER MY SUPERVISION.

Signature

STATE OF HAWAII
DEPARTMENT OF TRANSPORTATION
HIGHWAYS DIVISION

CONTROLLER SCHEDULE & DETAILS

LIHUE AIRPORT GATEWAY BEAUTIFICATION

PROJECT NO. LT-K-05-78

SCALE: NO SCALE DATE: 1 FEB. 1984

SHEET No. L-8 OF 12 SHEETS

ORIGINAL PLAN | SURVEY PLOTTED BY | DRAWN BY | TRACED BY | DESIGNED BY | QUANTITIES BY | CHECKED BY | DATE | NOTE BOOK | No.