FED. ROAD DIST. NO.	STATE	FED. AID PROJ. NO.	FISCAL YEAR	SHEET NO.	TOTAL SHEETS
HAWAII	HAW.	STP-0700(083)	2019	10	14

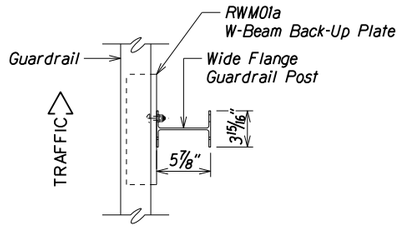

PLAN

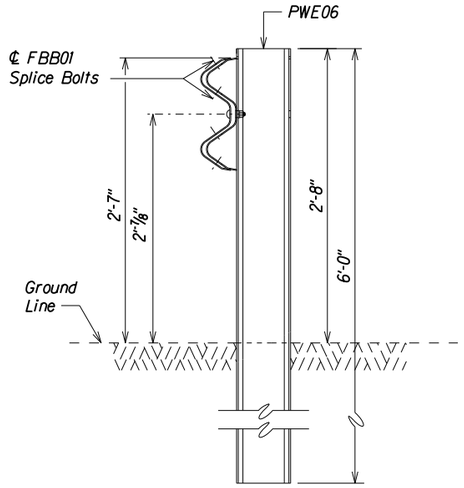

SECTION A-A

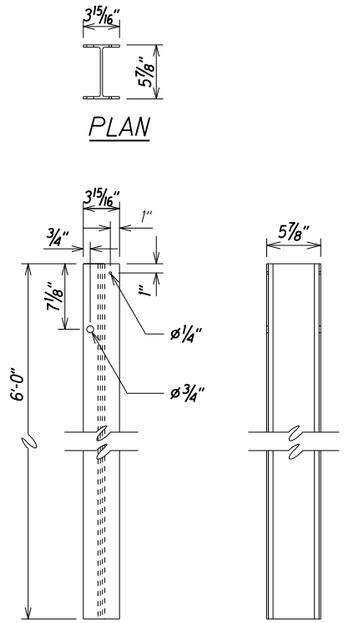

PLAN

ELEVATION

SIDE

WIDE-FLANGE GUARDRAIL POST (PWE06)

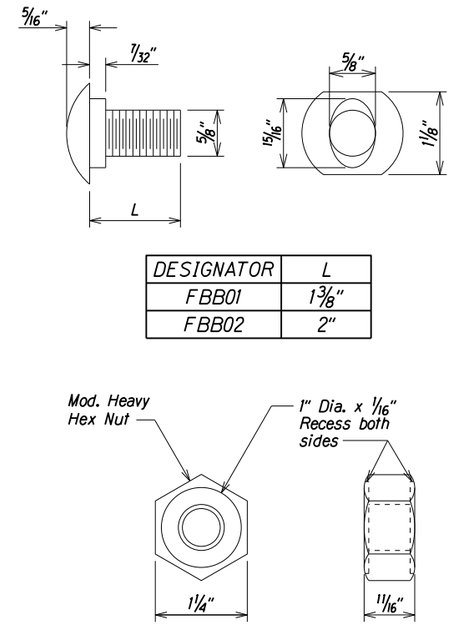

DESIGNATOR	L
FBB01	1 3/8"
FBB02	2"

GUARDRAIL BOLTS AND RECESSED NUT

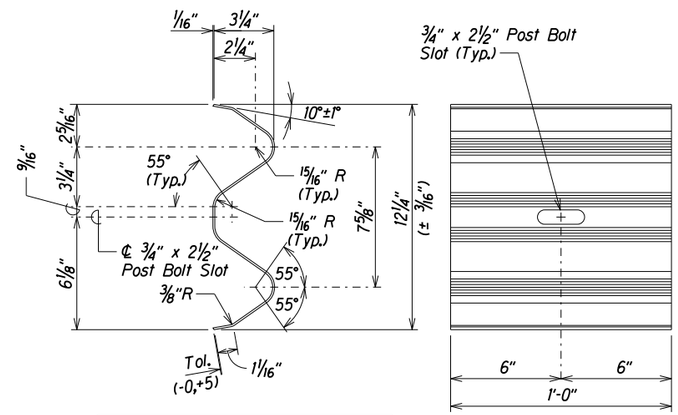

DESIGNATOR	BASE METAL THICKNESS
RWM01a	12 Gauge

W-BEAM BACK-UP PLATE (RWM01a)

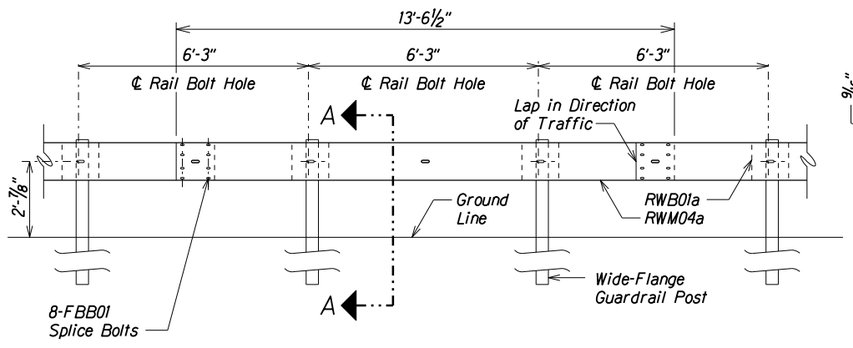

ELEVATION

MIDWEST GUARDRAIL SYSTEM WITH NO BLOCKOUTS (SGR41)

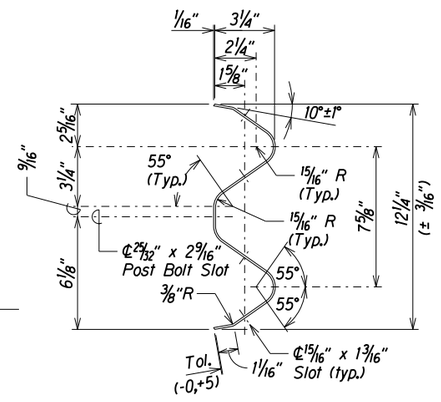

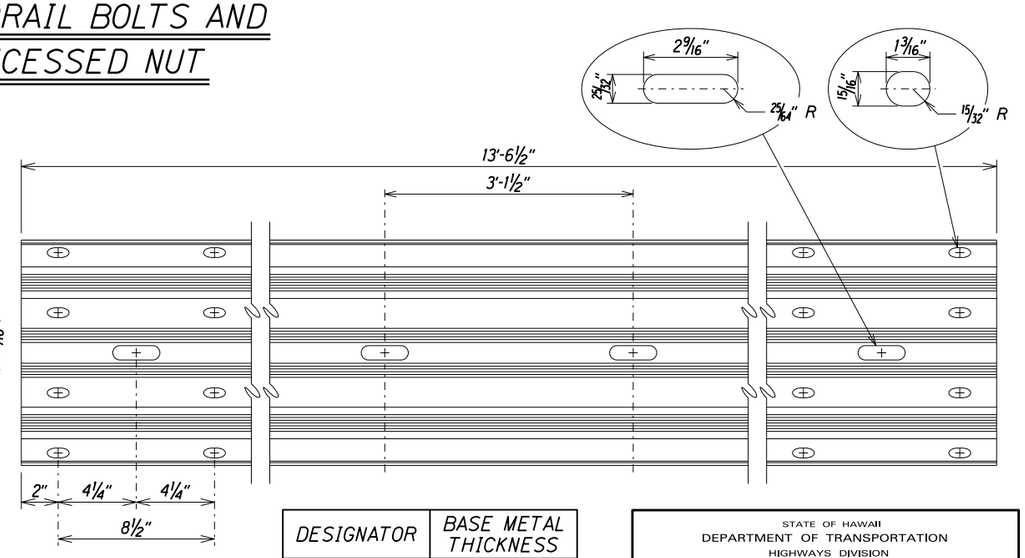

DESIGNATOR	BASE METAL THICKNESS
RWM04a	12 Gauge

4 SPACE W-BEAM GUARDRAIL (RWM04a)

STATE OF HAWAII
DEPARTMENT OF TRANSPORTATION
HIGHWAYS DIVISION

MIDWEST GUARDRAIL SYSTEM WITH NO BLOCKOUTS

GUARDRAIL & SHOULDER IMPROVEMENTS AT VARIOUS LOCATIONS, PART 5

Federal-Aid Project No. STP-0700(083)

Scale: NTS Date: Mar. 2019

SHEET No. 2 OF 5 SHEETS

ORIGINAL PLAN	SURVEY PLOTTED BY	DATE
	DRAWN BY X	X
	TRACED BY	
NOTE BOOK	DESIGNED BY X	
N/A	QUANTITIES BY	
	CHECKED BY	

r07/28/17 Dust2/Ernest/standards/Traffic Guardrail Standards/m3_mgswbeam2.dgn