FED. ROAD DIST. NO.	STATE	PROJ. NO.	FISCAL YEAR	SHEET NO.	TOTAL SHEETS
HAWAII	HAW.	50E-01-98	1998	55	79

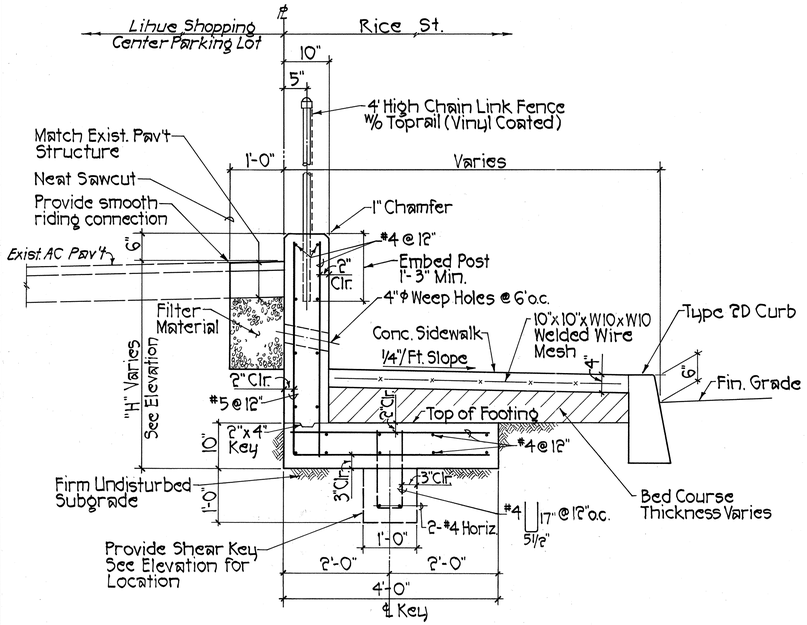

TYPE A REINF. CONCRETE WALL SECTION (A 55)

Scale: 3/4" = 1'-0"

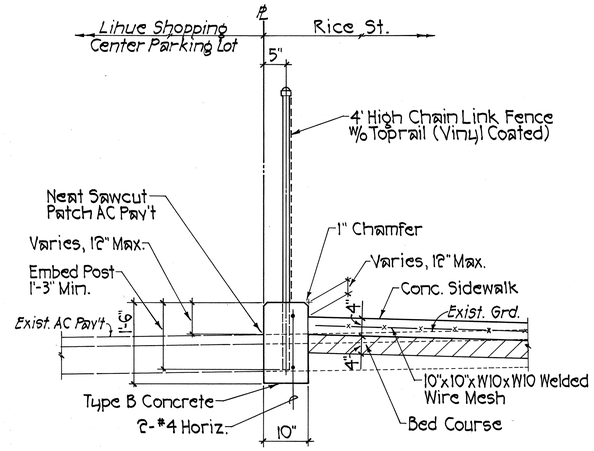

TYPE B WALL SECTION (B 55)

Scale: 3/4" = 1'-0"

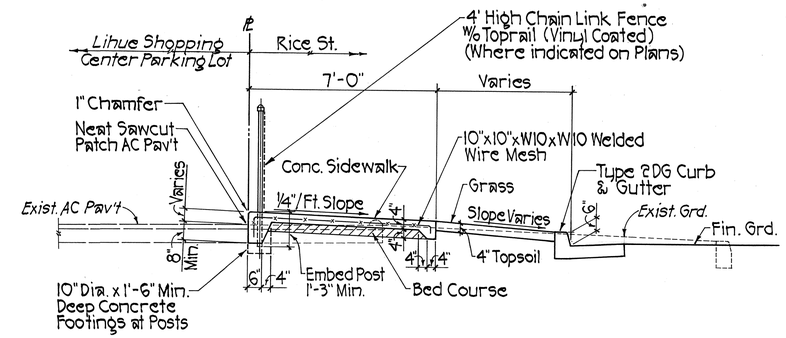

TYPE 2 CONCRETE SIDEWALK

Scale: 3/8" = 1'-0"

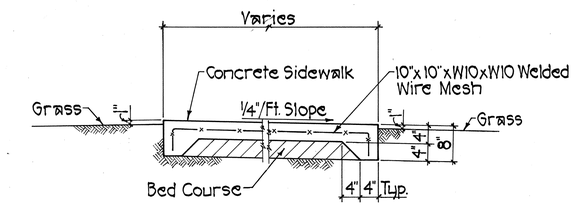

TYPE 1 CONCRETE SIDEWALK

Scale: 3/4" = 1'-0"

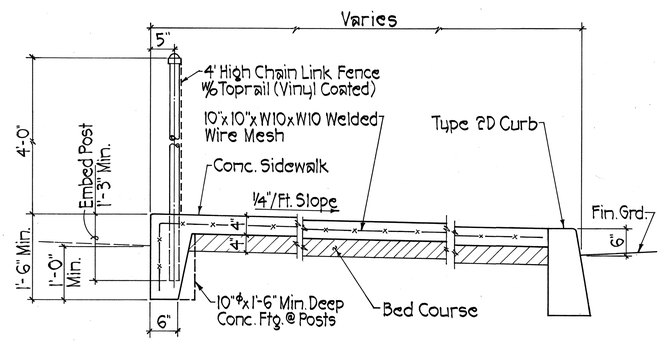

TYPE 3 CONCRETE SIDEWALK

Scale: 3/4" = 1'-0"

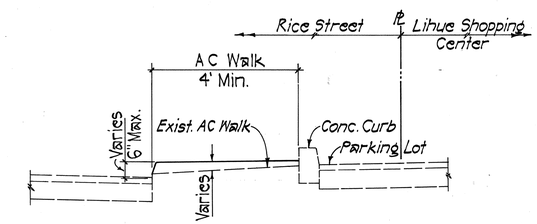

A.C. WALKWAY DETAIL

Scale: 1/2" = 1'-0"

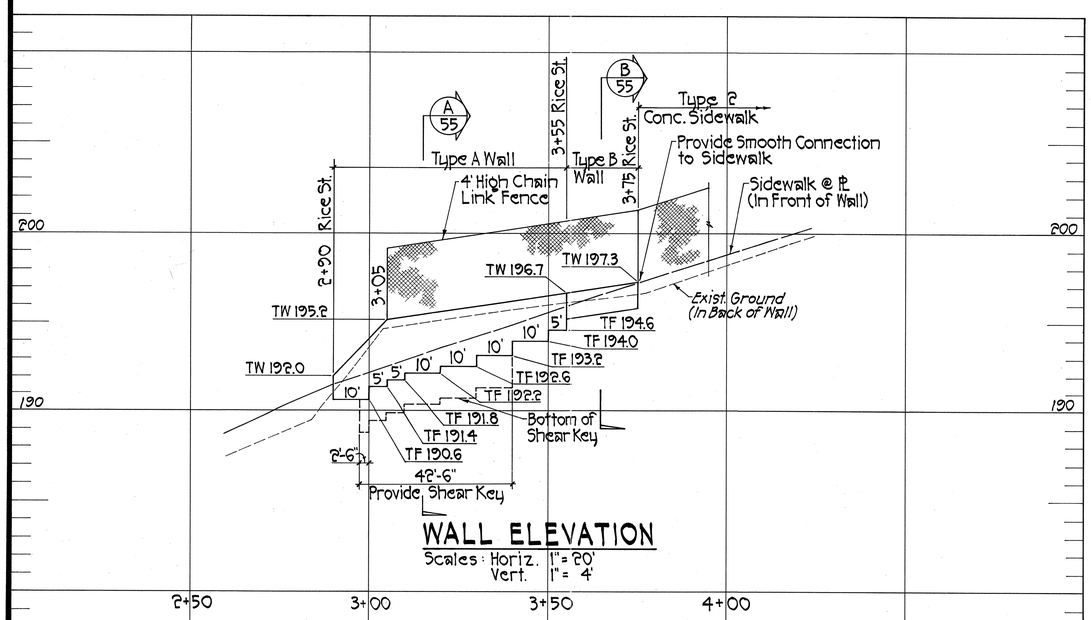

WALL ELEVATION

Scales: Horiz. 1" = 20'
Vert. 1" = 4'

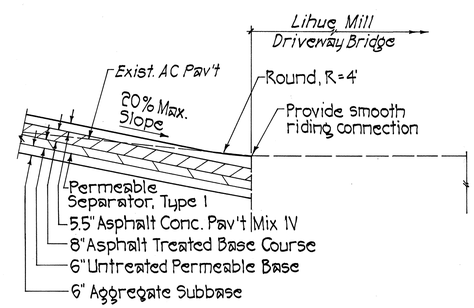

LIHUE MILL DRIVEWAY ADJUSTMENT

Scale: 1/4" = 1'-0

ORIGINAL PLAN		DATE
	SURVEY PLOTTED BY	
	PLANS PREPARED BY	
	TRACED BY	
NOTE BOOK	DESIGNED BY	
No.	QUANTITIES BY	
	CHECKED BY	

HAROLD I. YOSHIZAKI LICENSED PROFESSIONAL ENGINEER No. 2091-C HAWAII, U.S.A.

THIS WORK WAS PREPARED BY ME OR UNDER MY SUPERVISION.
Harold I. Yoshizaki
SHIMABUKURO, ENDO & YOSHIZAKI, INC.
1126 12th Avenue
Honolulu, Hawaii 96816

STATE OF HAWAII
DEPARTMENT OF TRANSPORTATION
HIGHWAYS DIVISION

MISCELLANEOUS DETAILS

KAUMUALII HIGHWAY, KUHIO HIGHWAY & RICE STREET INTERSECTION IMPROVEMENTS
PROJECT NO. 50E-01-98

SCALE: AS NOTED DATE:

SHEET No. 1 OF 1 SHEETS