FED. ROAD DIST. NO.	STATE	PROJ. NO.	FISCAL YEAR	SHEET NO.	TOTAL SHEETS
HAWAII	HAW.	HWY-K-02-98	2000	28	53

Note: 1) Reinforcing Steel shall conform to ASTM 615-Grade 60.
2) Costs for concrete collar (in place complete) shall be considered incidental to the installation of the new 24" RCP culvert.

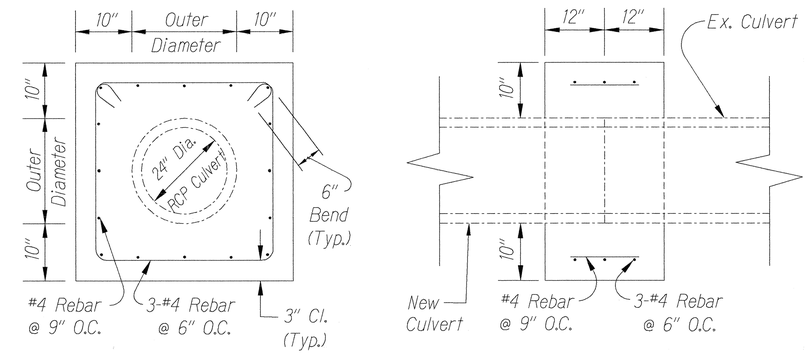

ELEVATION

SECTION

REINFORCED CONCRETE COLLAR (RCP CULVERT)
N.T.S.

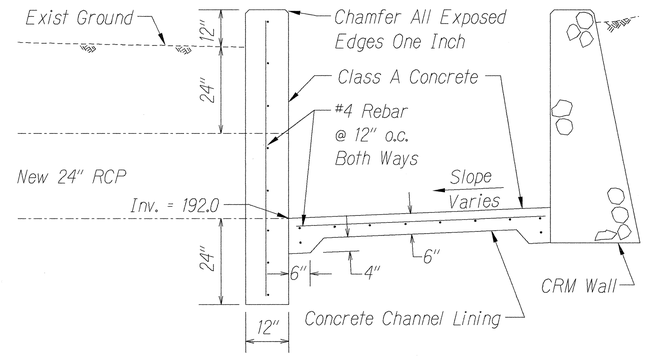

CONCRETE HEADWALL SECTION
N.T.S.

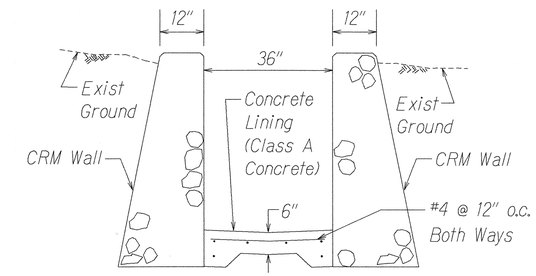

TYPICAL SECTION A-A
N.T.S.

Data For CRM Wall	
B	H
2'-0"	5'-0"
2'-3"	5'-6"
2'-6"	6'-0"

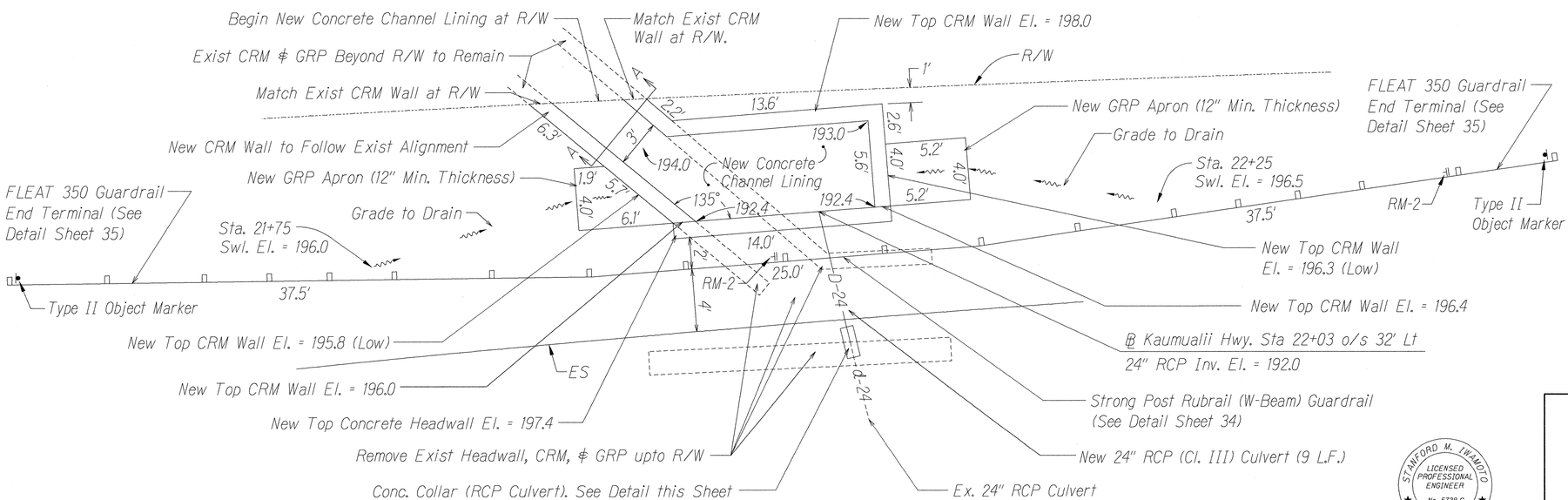

DRAINAGE INLET STRUCTURE PLAN
Scale: 1" = 4'

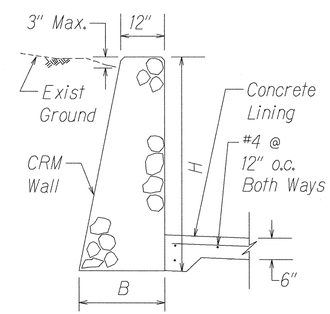

CRM WALL SECTION
N.T.S.

STANFORD M. IWAMOTO
LICENSED PROFESSIONAL ENGINEER
No. 5738-C
HAWAII, U.S.A.

THIS WORK WAS PREPARED BY ME OR UNDER MY SUPERVISION

Signature

STATE OF HAWAII
DEPARTMENT OF TRANSPORTATION
HIGHWAYS DIVISION

MISCELLANEOUS DETAILS - KAUMAKANI

MISCELLANEOUS TRAFFIC OPERATIONAL AND SAFETY IMPROVEMENTS TO EXISTING INTERSECTIONS AND HIGHWAY FACILITIES
Project No. HWY-K-02-98

Scale: As Shown Date: August, 1999

SHEET No. 1 OF 1 SHEETS

SURVEY PLOTTED BY	DATE
DRAWN BY	DATE
TRACED BY	DATE
DESIGNED BY	DATE
QUANTITIES BY	DATE
CHECKED BY	DATE
ORIGINAL PLAN	NOTE BOOK No.