FED. ROAD DIST. NO.	STATE	FED. AID PROJ. NO.	FISCAL YEAR	SHEET NO.	TOTAL SHEETS
HAWAII	HAW.	50B-01-00M	2002	16	40

CURB RAMP NOTES

1. These details are intended as curb ramp guide lines for design and construction.
2. A site specific detail that meets American with Disabilities Act (ADA) requirements shall be shown on the plans.
3. To ensure constructability, spot elevations shall be used in the design. Benchmarks and horizontal ties shall be provided for construction stakeout.
4. A 2% maximum cross slope shall be maintained in the direction of pedestrian traffic.
5. Design slopes of flares and ramps shall be labeled.
6. Curb ramps shall be installed at 90° to the sidewalk or to the maximum extent feasible in alterations.
7. At intersections, curb ramps for each crosswalk are preferred and shall be in line and into the crosswalk. However, for existing sites, a single curb ramp (diagonal curb ramp) to serve two crosswalks can be approved if the design detail is acceptable by the State.
8. Subject to field conditions, the Engineer shall determine the final location of curb ramps.
9. Prior to construction, if a curb ramp cannot be designed according to DOT, Highways Division curb ramp guide lines, either a "Technically Infeasible" form (for existing construction) or a "Structurally Impracticable" form (for new construction) shall be filled-out and submitted to the DOT, Highways Division for signature which will then be submitted to the Disability and Communication Access Board (DCAB).
10. The maximum slopes of adjoining gutters or road surface immediately fronting the curb ramp shall not exceed 5% for Type A and D ramps and 8.33% for Type B, C, and E ramps. The counter slope may be exceeded when the change of grade does not exceed 13% (11% preferred) over a distance of 2 ft. Exceeding the 13% (11% preferred) change in grade will cause a person in a wheelchair to tip forward and/or fall backward.
11. All pullboxes shall be installed away from the curb ramp and within the sidewalk/unpaved area to the maximum extent feasible.
12. Where necessary, existing pullboxes, handholes, manholes, etc. shall be adjusted to match curb ramp grade. Adjustments shall not be paid for separately but shall be considered incidental to the various curb ramp items unless indicated otherwise.
13. Transitions from ramps to gutters and streets shall be flush. If needed, a lip with a maximum vertical change in level of 1/4" is allowed.
14. Curb ramps and sidewalks shall be designed and constructed to eliminate ponding to the maximum extent feasible.
15. Construction joints are required to join curb ramps with sidewalks. See Sheet C2 for construction joint detail.
16. Unless otherwise noted, new gutters are required as shown.
17. All curb ramps shall be reinforced with 6 x 6 W2.9/W2.9 welded wire fabric.
18. Surface of sidewalks and curb ramps shall be firm, stable and slip-resistant. This includes the surfaces of pullboxes, valve covers, manhole covers, etc.
19. Bed course material is required for curb ramps, sidewalks and gutters.
20. Prior to construction, all plans and specifications shall be submitted (for review) to DCAB to ensure conformance with the ADAAG as well as any supplemental design specifications established by DCAB.

CURB RAMP NOTES

21. If a curb ramp is not constructed according to the plans, the Contractor shall reconstruct the curb ramp at no cost to the State. Construction tolerance for Portland Cement Concrete shall be based on 1/4 inch per 10 ft. (±0.2%). Remedial measures will not be accepted.
22. Additional information is available from :
    a) Americans with Disabilities Act Accessibility Guidelines (ADAAG), September 1998, The Access Board.
    b) Accessible Right-of-Way : A Design Guide, November 1999, The Access Board.
    c) Designing Sidewalks and Trials for Access, July 1999, FHWA.

CURB RAMP SCHEDULE

Location	Cross Street	Ramp Type	Qty.
℄ Sta. 195+00± Rt.	Pokole Road	Type "D" Modified	1
℄ Sta. 196+00± Lt. & Rt.	Pokole Road	Type "A" Modified	2
℄ Sta. 204+00± Rt.	Halepule Road	Type "D" Modified	1
℄ Sta. 0+40± Lt.	Waimea Road	Waimea Road Curb Ramp	1
℄ Sta. 3+50± Lt.	Panako Road	Panako Road Curb Ramp	1

PM : GKC
OPER : LSA
REVISED : 04/09/01

DATE : 10/05/00
PLOT SCALE : 1 = 1
FILE: 9930-C10.DWG
JOB NO. : 9930

ORIGINAL PLAN
SURVEY PLOTTED BY ____ DATE
DRAWN BY ____
TRACED BY ____
DESIGNED BY ____
QUANTITIES BY ____
NOTEBOOK
CHECKED BY ____
No. ____

JUNE J. NAKAMURA
LICENSED PROFESSIONAL ENGINEER
No.4376-C
HAWAII, U.S.A.

THIS WORK WAS PREPARED BY ME OR UNDER MY SUPERVISION
BY: June J. Nakamura
DATE: 12/14/00

STATE OF HAWAII
DEPARTMENT OF TRANSPORTATION
HIGHWAYS DIVISION

CURB RAMP SCHEDULE AND NOTES

KAUMUALII HIGHWAY RESURFACING
Mahaikona Bridge To Waimea Canyon Drive
F.A.I. Project No. 50B-01-00M

Scale: As Noted Date: 12/13/00

SHEET NO. C10 OF C23 SHEETS

FED. ROAD DIST. NO.	STATE	PROJ. NO.	FISCAL YEAR	SHEET NO.	TOTAL SHEETS
HAWAII	HAW.	50B-01-00M	2002	17	40

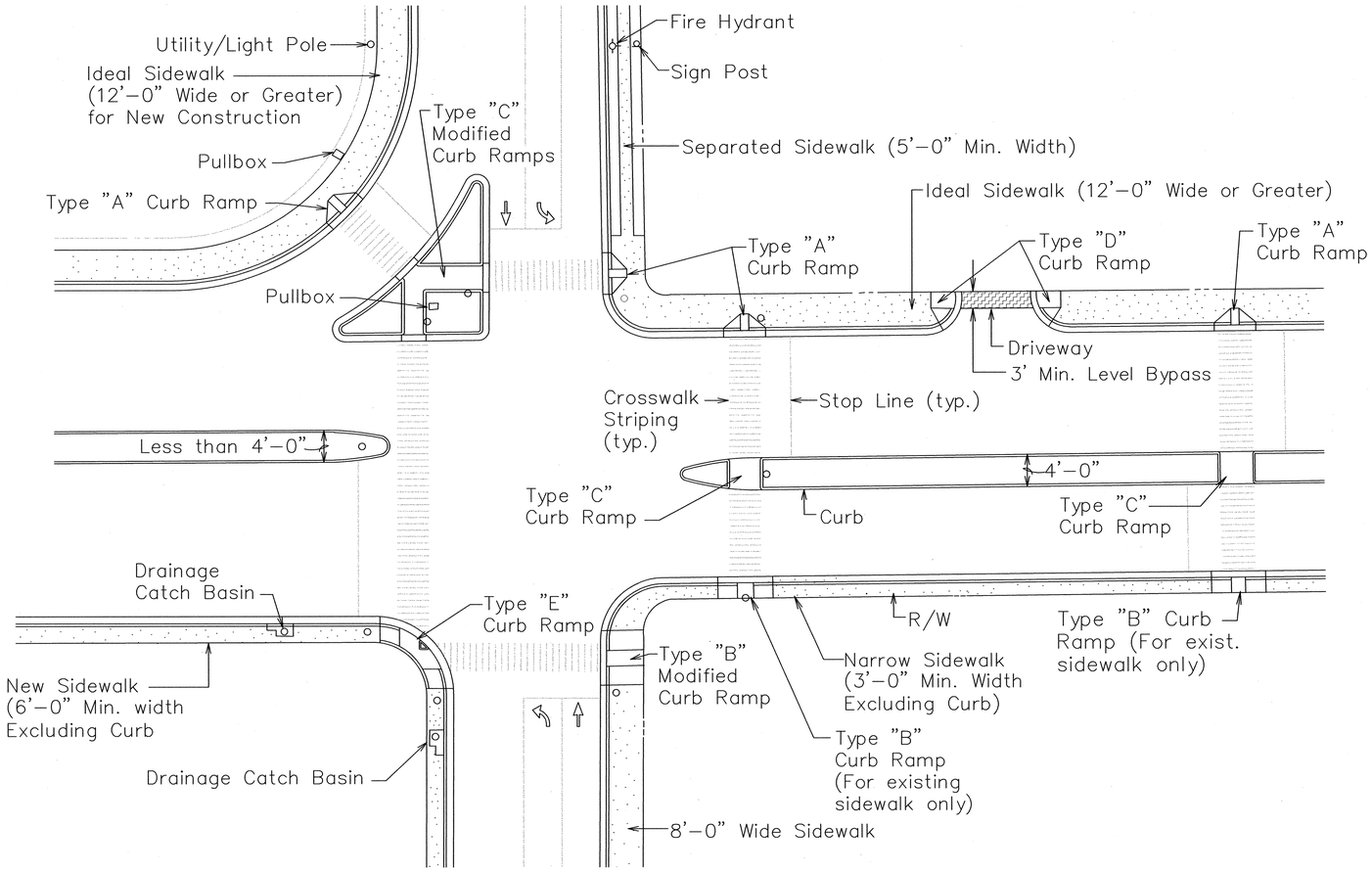

TYPICAL CURB RAMPS

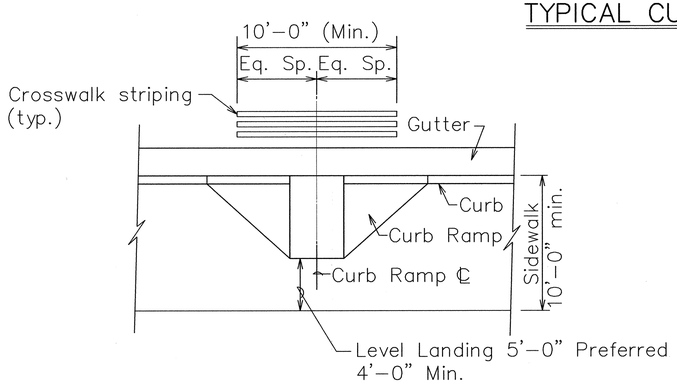

TYPICAL CROSSWALK STRIPING AT CURB RAMP

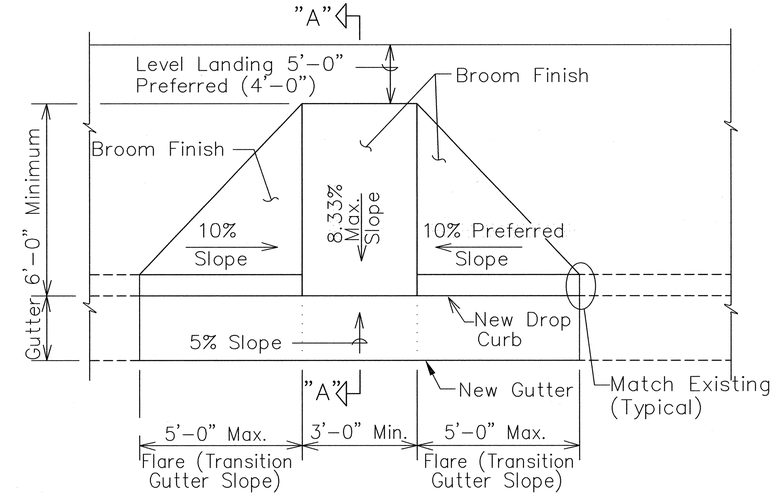

PLAN

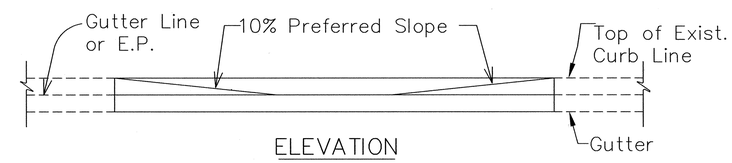

ELEVATION

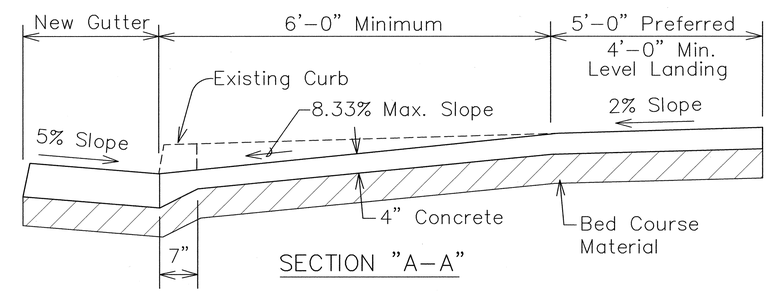

SECTION "A-A"

CURB RAMP – TYPE "A" MODIFIED

JUNE J. NAKAMURA LICENSED PROFESSIONAL ENGINEER No.4376-C HAWAII, U.S.A.

THIS WORK WAS PREPARED BY ME OR UNDER MY SUPERVISION

BY: June J. Nakamura

DATE: 12-14-00

STATE OF HAWAII
DEPARTMENT OF TRANSPORTATION
HIGHWAYS DIVISION

CURB RAMP DETAILS

KAUMUALII HIGHWAY RESURFACING
Mahaikona Bridge To Waimea Canyon Drive
Project No. 50B-01-00M

Scale: As Noted Date: 12/13/00

SHEET NO. C11 OF C23 SHEETS

PM: JJN
OPER: PT
REVISED: 12/8/00

DATE: 12/18/98
SCALE: 1 = 1
FILE: 9930-C11.dwg
JOB NO. 9930

ORIGINAL PLAN	SURVEY PLOTTED BY	DATE
	DRAWN BY X	X
	TRACED BY	"
NOTE BOOK	DESIGNED BY	"
	QUANTITIES BY	"
No.	CHECKED BY	"

R 5-1-98 TE-68 sht. 1 of 5

FED. ROAD DIST. NO.	STATE	PROJ. NO.	FISCAL YEAR	SHEET NO.	TOTAL SHEETS
HAWAII	HAW.	50B-01-00M	2002	18	40

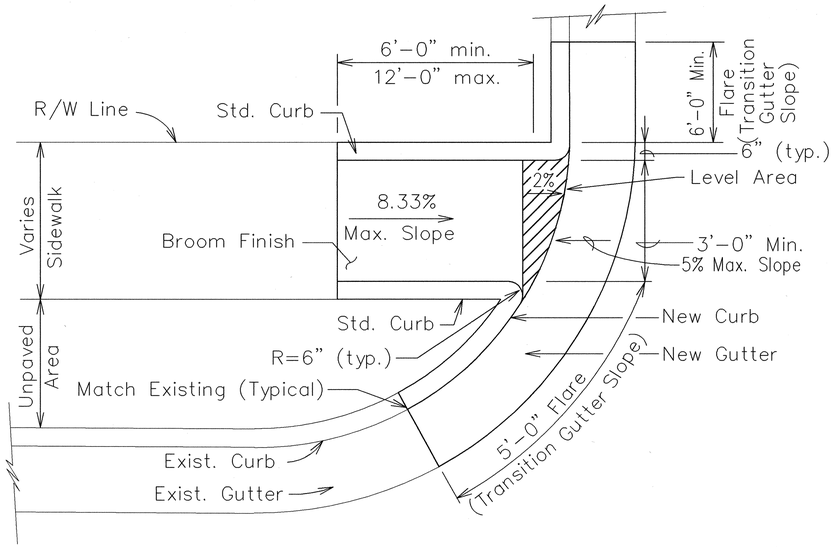

CURB RAMP – TYPE "D" MODIFIED

Not To Scale

PM: JJN
OPER: PAT, LSA*
REVISED: 04/09/01

DATE: 12/18/98
SCALE: 1 = 1
FILE: 9930-C12.DWG
JOB NO. 9930

ORIGINAL PLAN	SURVEY PLOTTED BY:	DATE
	DRAWN BY X	" " X
NOTE BOOK	TRACED BY	" "
X.dgn	DESIGNED BY	" "
No.	QUANTITIES BY	" "
	CHECKED BY	" "

R 5-1-98 TE-69 sht. 2 of 5

JUNE J. NAKAMURA
LICENSED PROFESSIONAL ENGINEER
No.4376-C
HAWAII, U.S.A.

THIS WORK WAS PREPARED BY ME OR UNDER MY SUPERVISION

BY: June J. Nakamura

DATE: 12-18-01

STATE OF HAWAII
DEPARTMENT OF TRANSPORTATION
HIGHWAYS DIVISION

CURB RAMP DETAIL

KAUMUALII HIGHWAY RESURFACING
Mahaikona Bridge To Waimea Canyon Drive
Project No. 50B-01-00M

Scale: As Noted Date: 12/13/00

SHEET NO. C12 OF C23 SHEETS

FED. ROAD DIST. NO.	STATE	PROJ. NO.	FISCAL YEAR	SHEET NO.	TOTAL SHEETS
HAWAII	HAW.	50B-01-00M	2002	19	40

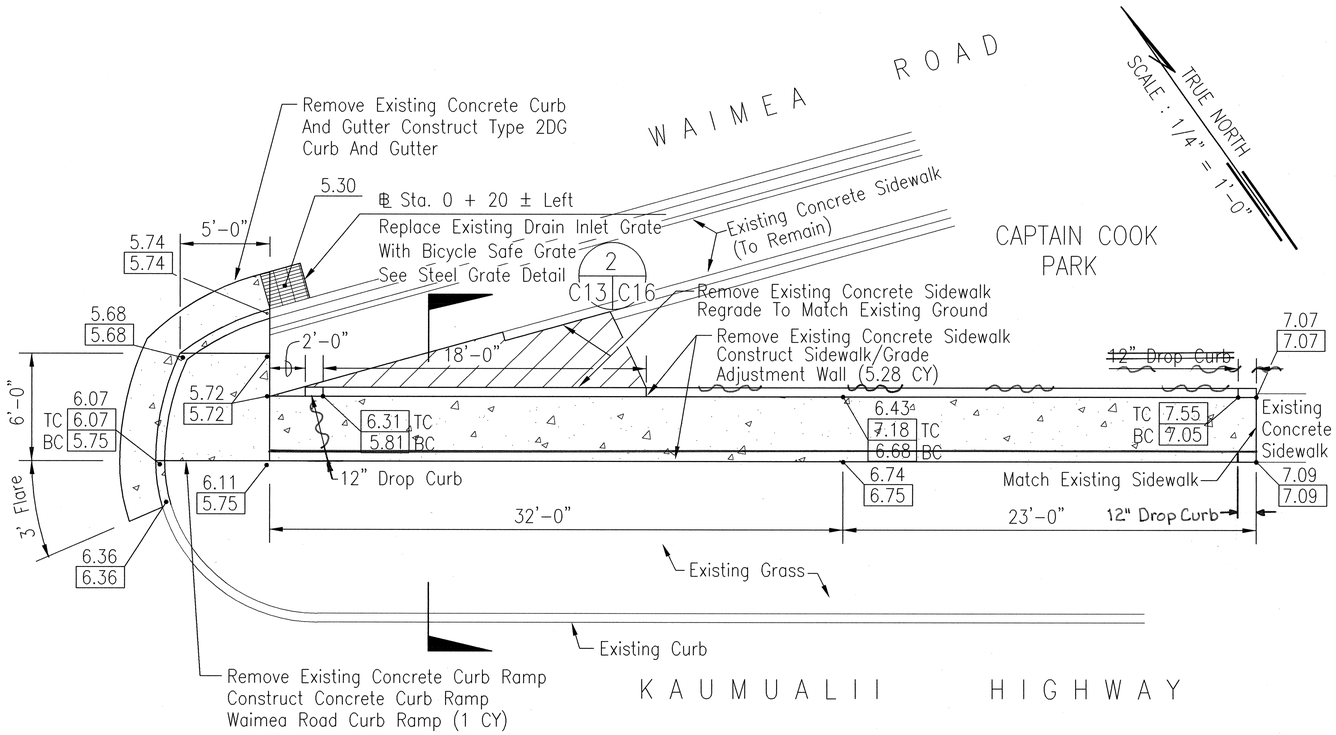

Note

1. Removal Of Existing Concrete Ramp, Sidewalk And Concrete Curb And Gutter Shall Be Considered Incidental To Various Contract Items.
2. Construction Of Concrete Curb And Gutter Shall Be Considered Incidental To Item No. 650.2010 Curb Ramp, Waimea Road

PLAN

Scale : 1/4" = 1'-0"

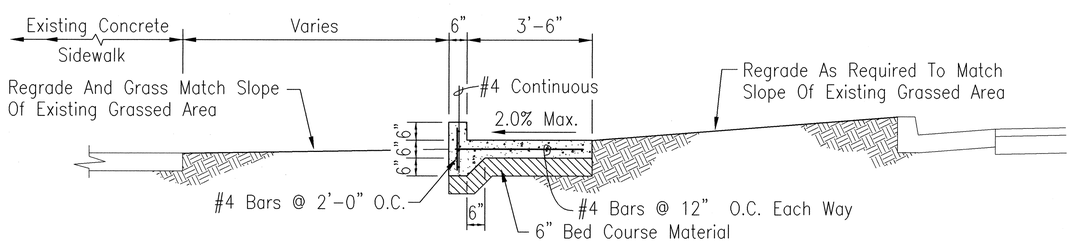

SECTION

Scale : 1/2" = 1'-0"

CURB RAMP AT WAIMEA ROAD

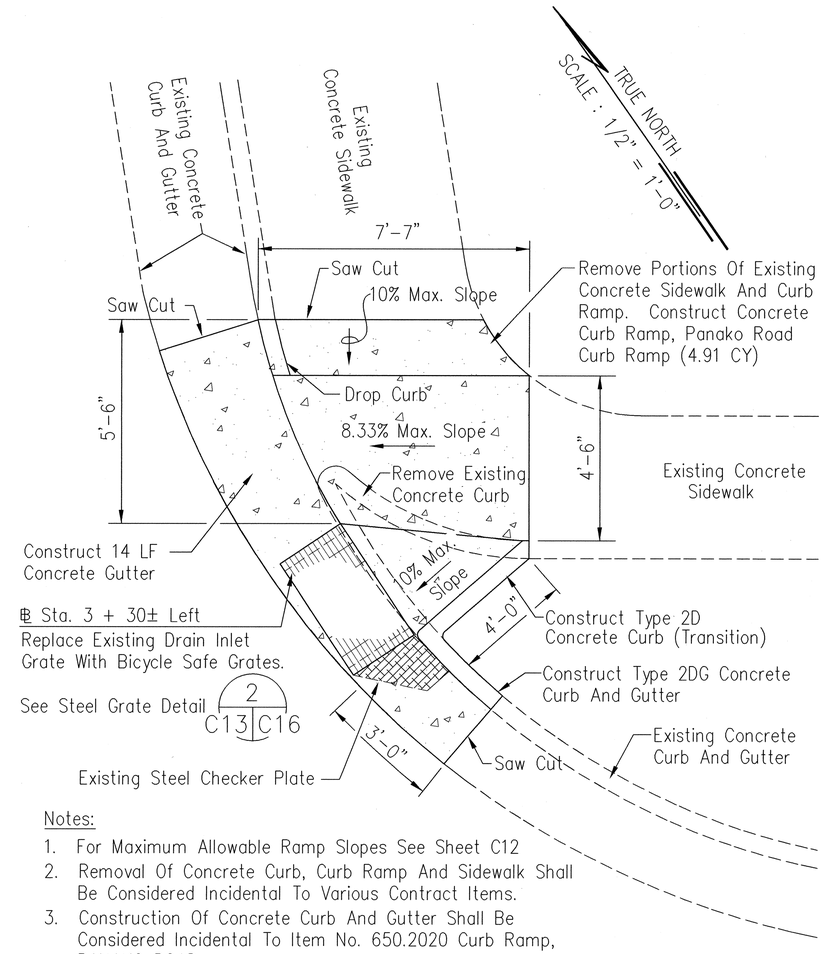

Notes:

1. For Maximum Allowable Ramp Slopes See Sheet C12
2. Removal Of Concrete Curb, Curb Ramp And Sidewalk Shall Be Considered Incidental To Various Contract Items.
3. Construction Of Concrete Curb And Gutter Shall Be Considered Incidental To Item No. 650.2020 Curb Ramp, PANAKO ROAD.

CURB RAMP AT PANAKO ROAD

SCALE : 1/2" = 1'-0"

PM : GKC
OPER : LSA/GKC/PT*
REVISED : 12/14/00

DATE : 07/03/00
PLOT SCALE : 1 = 1
FILE: 9930-C13.DWG
JOB NO. : 9930

SURVEY PLOTTED BY		DATE
DRAWN BY		
TRACED BY		
DESIGNED BY		
QUANTITIES BY		
CHECKED BY		
ORIGINAL PLAN	NOTEBOOK	No.

JUNE J. NAKAMURA LICENSED PROFESSIONAL ENGINEER No.4376-C HAWAII, U.S.A.

THIS WORK WAS PREPARED BY ME OR UNDER MY SUPERVISION

BY: June J. Nakamura

DATE: 12-14-00

STATE OF HAWAII
DEPARTMENT OF TRANSPORTATION
HIGHWAYS DIVISION

CURB RAMP DETAILS

KAUMUALII HIGHWAY RESURFACING
Mahaikona Bridge To Waimea Canyon Drive
Project No. 50B-01-00M

Scale: As Noted Date: 12/13/00

SHEET NO. C13 OF C23 SHEETS

"AS-BUILT"

FED. ROAD DIST. NO.	STATE	PROJ. NO.	FISCAL YEAR	SHEET NO.	TOTAL SHEETS
HAWAII	HAW.	50B-01-00M	2002	20	40

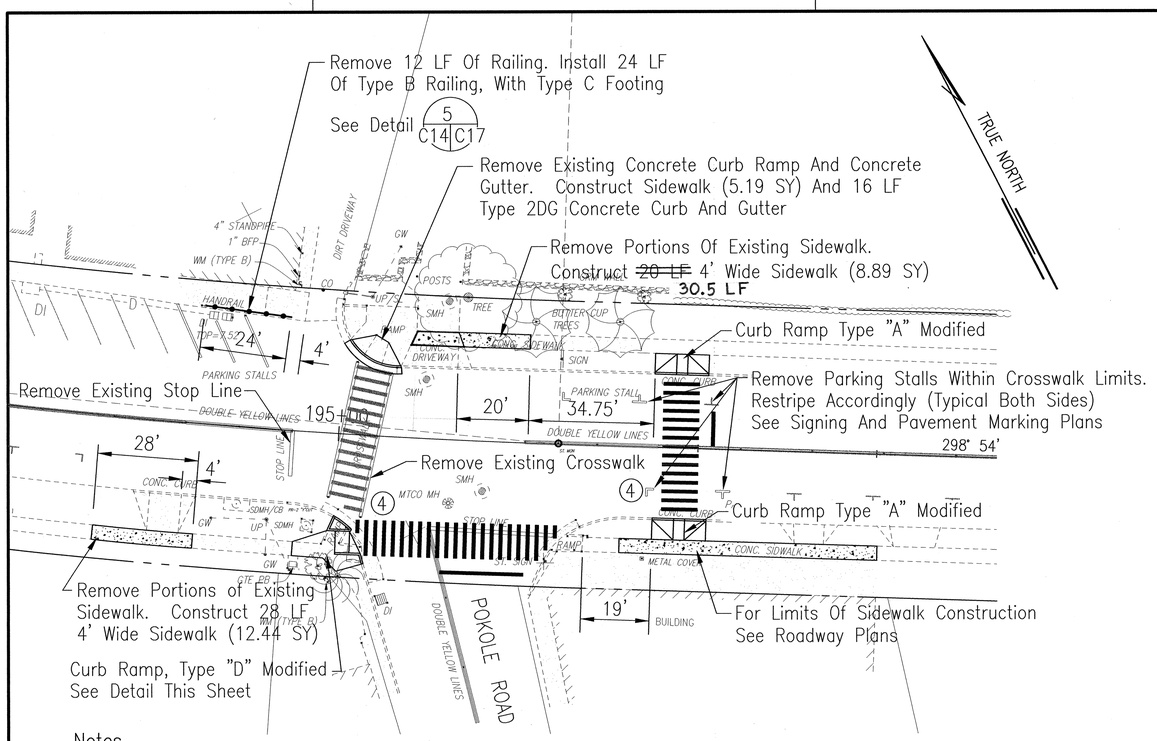

Notes

1. See Signing And Pavement Marking Plans For Finished Roadway Striping.
2. Removal Of Existing Railing And Patching Existing Sidewalk Shall Be Considered Incidental To Various Contract Items.
3. Removal Of Existing Curbs And Or Gutters And Construction Of Concrete Curbs And Gutters Shall Be Considered Incidental To Various Contract Items.
4. Construction Of Concrete Curb And Gutter Type 2DG Shall Be Considered Incidental To Item No. 608.1100 Concrete Sidewalk.

KAUMUALII HIGHWAY/POKOLE ROAD INTERSECTION

SCALE: 1" = 20'

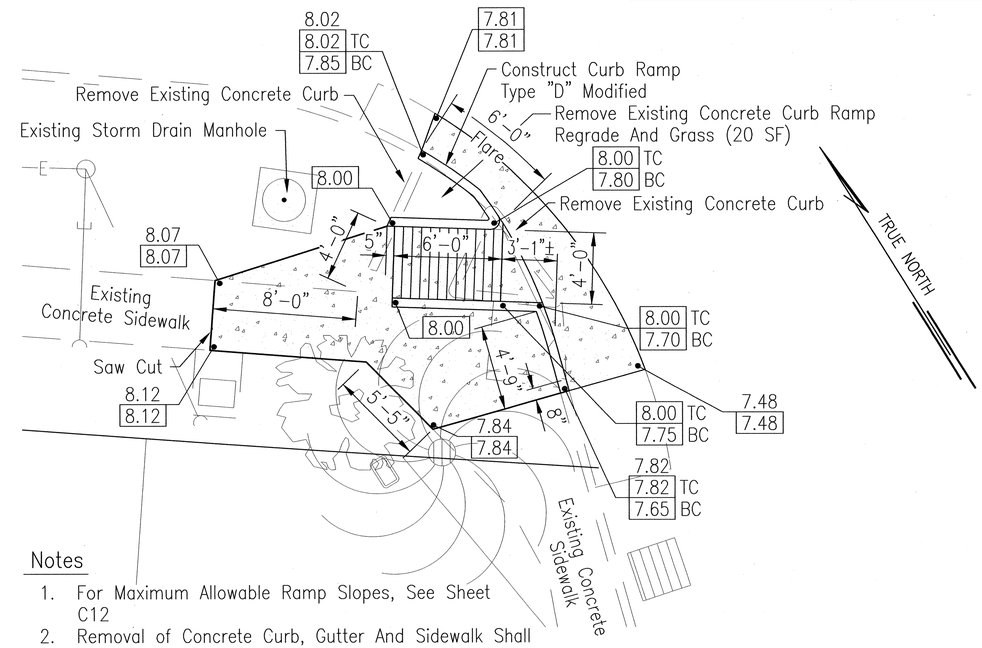

Notes

1. For Maximum Allowable Ramp Slopes, See Sheet C12
2. Removal of Concrete Curb, Gutter And Sidewalk Shall Be Considered Incidental to Various Contract Items.
3. Construction of Concrete Curb and Gutter Shall Be Considered Incidental to Item No. 650.1040 Curb Ramp, Type "D" Modified.

CURB RAMP AT POKOLE ROAD

Scale: 1/4" = 1'-0"

PM : JJN
OPER : GKC/PT*/LSA
REVISED : 12/14/00

DATE : 7/11/00
PLOT SCALE : 1=1
FILE: 9930-C14.dwg
JOB NO. : 9930

ORIGINAL PLAN	SURVEY PLOTTED BY	DATE
	DRAWN BY	
NOTEBOOK	TRACED BY	
	DESIGNED BY	
	QUANTITIES BY	
No.	CHECKED BY	

JUNE J. NAKAMURA LICENSED PROFESSIONAL ENGINEER No.4376-C HAWAII, U.S.A.

THIS WORK WAS PREPARED BY ME OR UNDER MY SUPERVISION

BY: June J. Nakamura

DATE: 12-14-00

STATE OF HAWAII
DEPARTMENT OF TRANSPORTATION
HIGHWAYS DIVISION

KAUMUALII HWY./POKOLE RD.
INTERSECTION CURB RAMP PLAN
KAUMUALII HIGHWAY RESURFACING
Mahaikona Bridge To Waimea Canyon Drive
Project No. 50B-01-00M

Scale: As Noted Date: 12/13/00

SHEET NO. C14 OF C23 SHEETS

"AS-BUILT"

FED. ROAD DIST. NO.	STATE	PROJ. NO.	FISCAL YEAR	SHEET NO.	TOTAL SHEETS
HAWAII	HAW.	50B-01-00M	2002	21	40

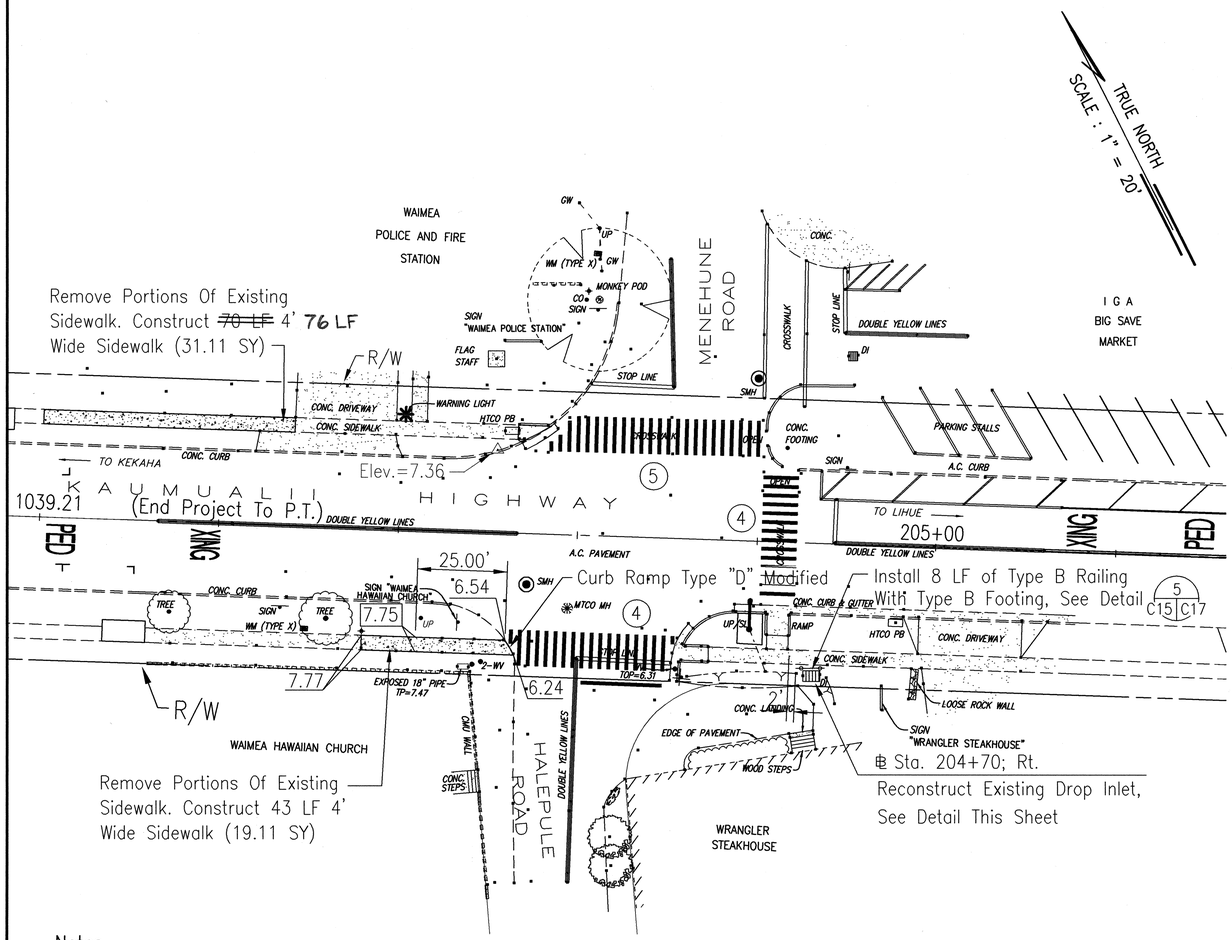

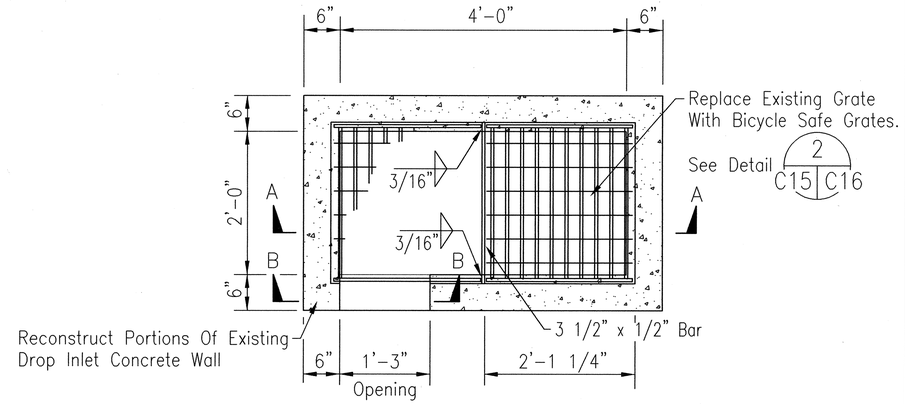

PLAN

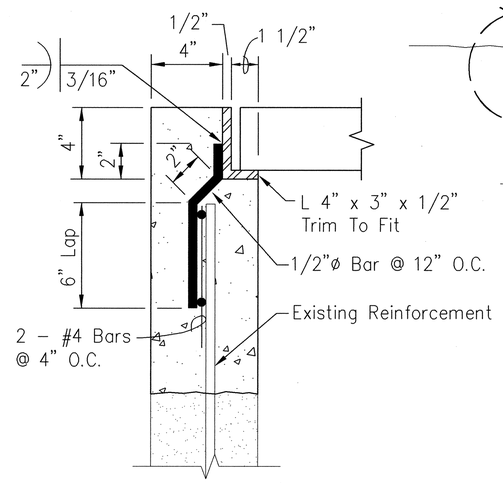

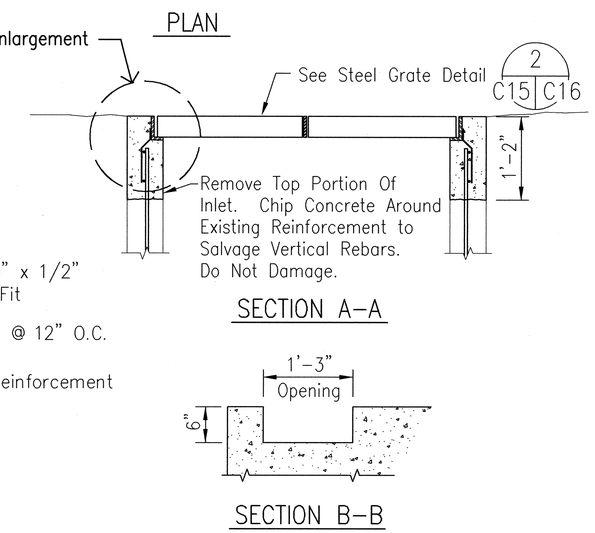

Notes

1. See Signing And Pavement Marking Plans For Finished Roadway Striping.

KAUMUALII HIGHWAY/HALEPULE ROAD

SCALE: 1" = 20'

ENLARGEMENT

Scale : 3" = 1'-0"

EXISTING DROP INLET

SCALE : 1" = 1'-0"

APPROVED:

County Engineer, Department of Public Works
(For Work within County right-of-way)

4/30/01
Date

JUNE J. NAKAMURA LICENSED PROFESSIONAL ENGINEER No.4376-C HAWAII, U.S.A.

THIS WORK WAS PREPARED BY ME OR UNDER MY SUPERVISION
BY: June J. Nakamura
DATE: 12-14-00

STATE OF HAWAII
DEPARTMENT OF TRANSPORTATION
HIGHWAYS DIVISION

KAUMUALII HWY./MENEHUNE RD.
INTERSECTION CURB RAMP PLAN
KAUMUALII HIGHWAY RESURFACING
Mahaikona Bridge To Waimea Canyon Drive
Project No. 50B-01-00M

Scale: As Noted Date: 12/13/00

SHEET NO. C15 OF C23 SHEETS

"AS-BUILT"

21

PM : JJN
OPER : GKC/MAM/PT*
REVISED : 04/09/01

DATE : 7/11/00
PLOT SCALE : 1=1
FILE: 9930-C15.dwg
JOB NO. : 9930

ORIGINAL PLAN	SURVEY PLOTTED BY	DATE
	DRAWN BY	
NOTEBOOK	TRACED BY	
	DESIGNED BY	
No.	QUANTITIES BY	
	CHECKED BY	