FED. ROAD DIST. NO.	STATE	PROJ. NO.	FISCAL YEAR	SHEET NO.	TOTAL SHEETS
HAWAII	HAW.	50D-01-99M	1999	10	29

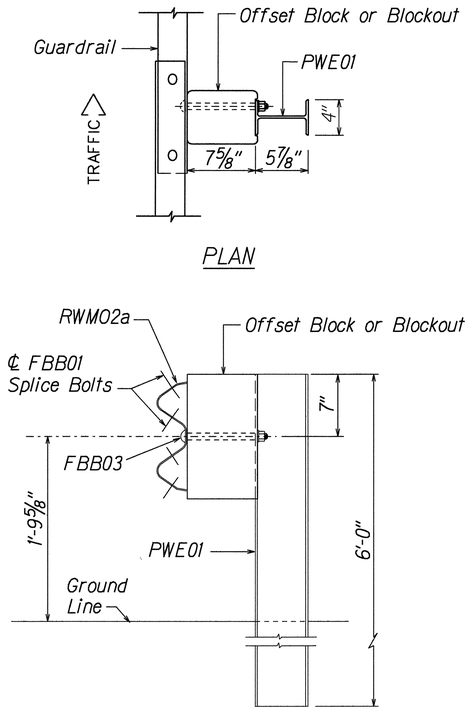

ELEVATION

STRONG POST W-BEAM GUARDRAIL (SGR04a)

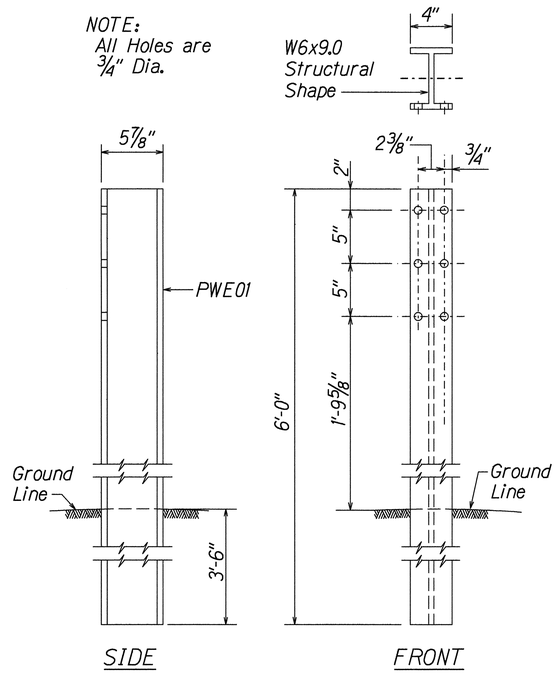

SIDE FRONT

W-BEAM STRONG POST (PWE01)

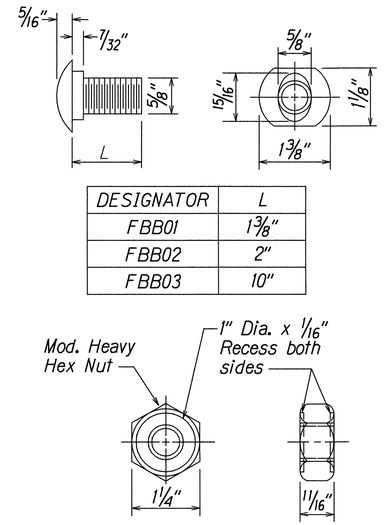

DESIGNATOR	L
FBB01	1⅜"
FBB02	2"
FBB03	10"

GUARDRAIL BOLTS AND RECESSED NUT

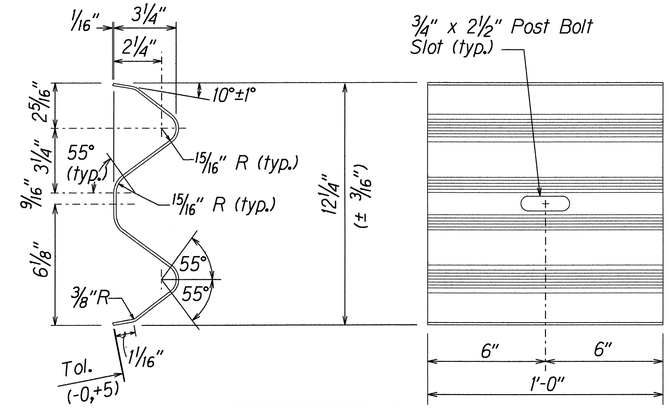

DESIGNATOR	BASE METAL THICKNESS
RWB01b	17/128"

W-BEAM BACK-UP-PLATE (RWB01b)

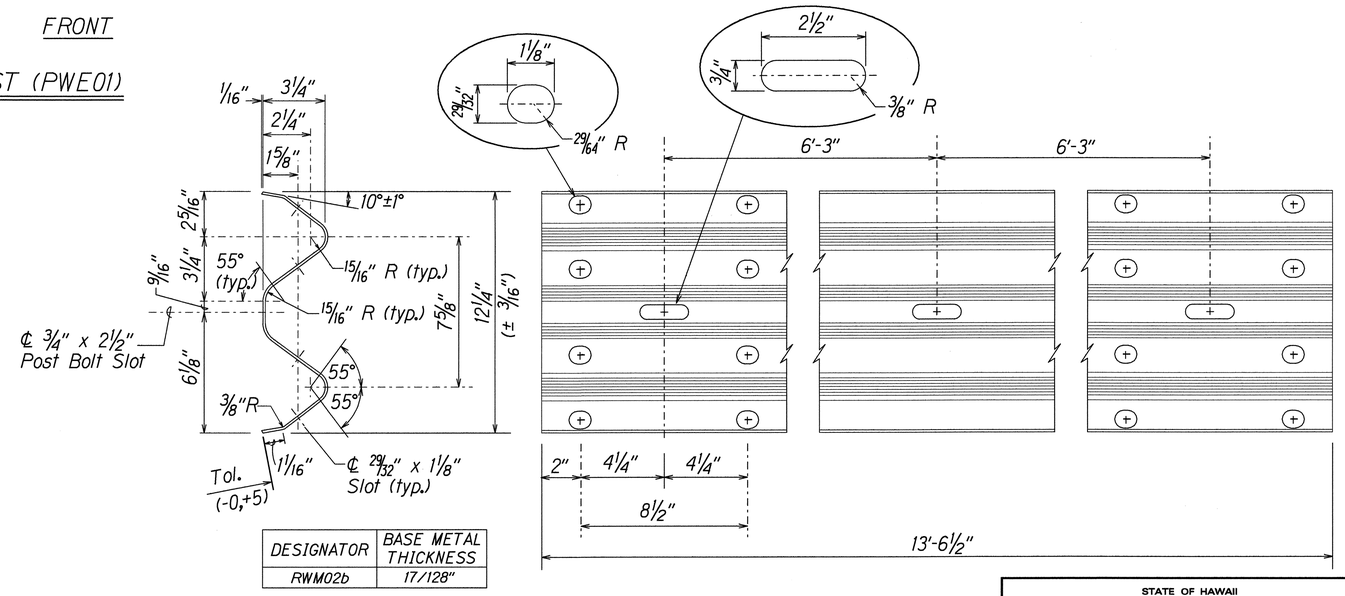

DESIGNATOR	BASE METAL THICKNESS
RWM02b	17/128"

2 SPACE W-BEAM GUARDRAIL (RWM02b)

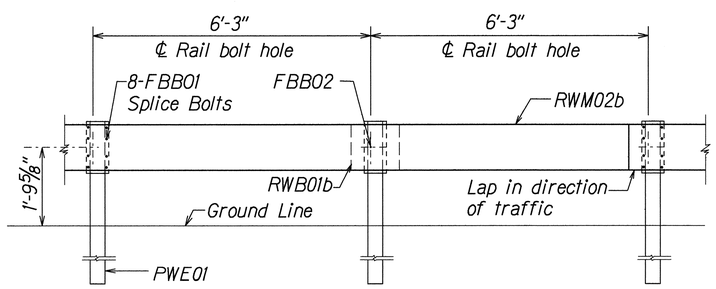

ELEVATION

STRONG POST W-BEAM GUARDRAIL WITH RECYCLED OFFSET BLOCK OR PLASTIC BLOCKOUT

STATE OF HAWAII
DEPARTMENT OF TRANSPORTATION
HIGHWAYS DIVISION

STRONG POST W-BEAM GUARDRAIL

KAUMUALII HIGHWAY RESURFACING
HULEIA BRIDGE TO MALUHIA ROAD
Project No. 50D-01-99M

Scale: As Shown Date: May, 1999

SHEET No. 1 OF 1 SHEETS

ORIGINAL PLAN | SURVEY PLOTTED BY | DRAWN BY X | TRACED BY | DESIGNED BY X | QUANTITIES BY | CHECKED BY | DATE X | NOTE BOOK | No.

r3/01/99 tdf-uby/guardrail/wbeamsudgn (standard plan TE-50 r03/06/87)