FED. ROAD DIST. NO.	STATE	FEDERAL-AID PROJ. NO.	FISCAL YEAR	SHEET NO.	TOTAL SHEETS
HAWAII	HAW.	STP-050-1(19)	1998	4	10

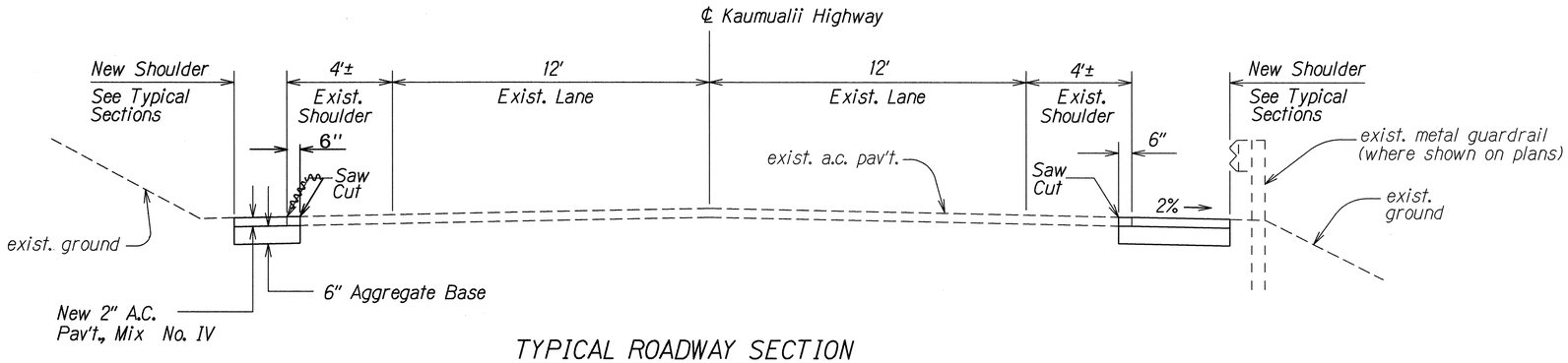

TYPICAL ROADWAY SECTION

Scale: 3/8" = 1'-0"

* "w" Varies (8.0' Max.)
(See Tables on Sht. No. 9)

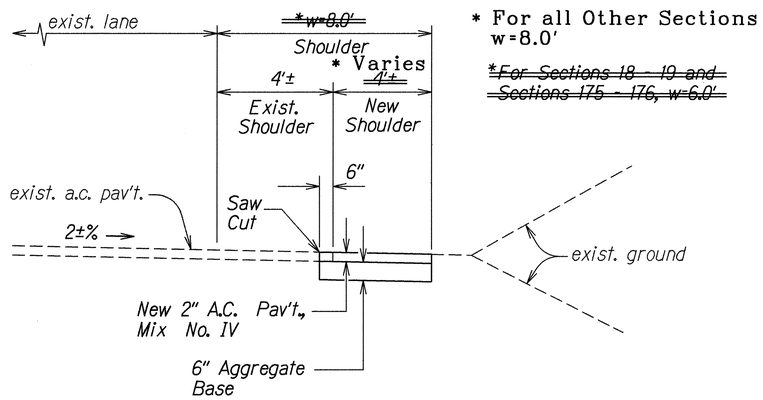

* For all Other Sections
w=8.0'

~~*For Sections 18 - 19 and Sections 175 - 176, w=6.0'~~

TYPICAL SECTION - CONDITION 1

Scale: 3/8" = 1'-0"

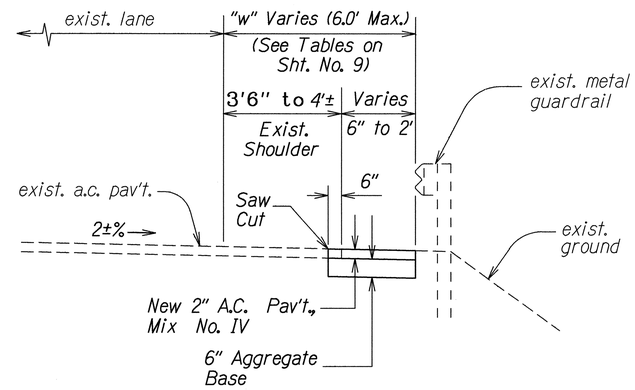

TYPICAL SECTION - CONDITION 3

Scale: 3/8" = 1'-0"

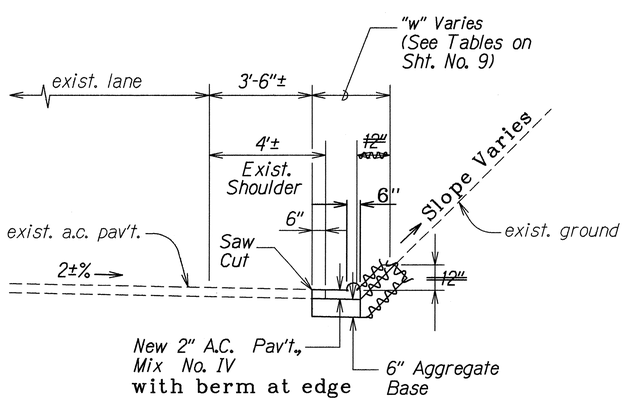

TYPICAL SECTION - CONDITION 2

Scale: 3/8" = 1'-0"

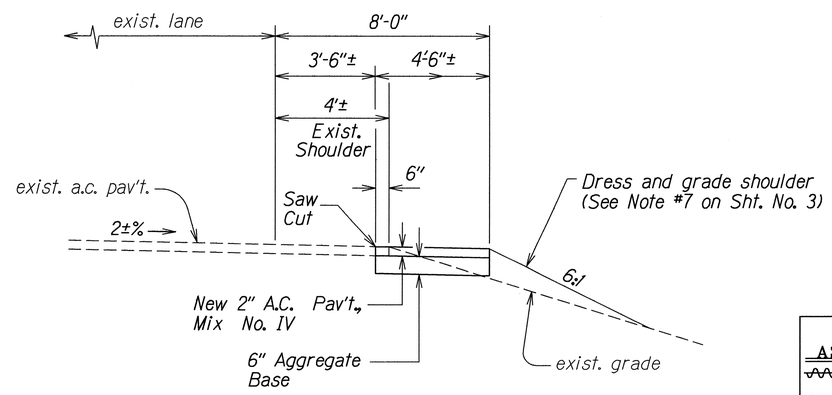

TYPICAL SECTION - CONDITION 4

Scale: 3/8" = 1'-0"

NOTES:

1. No shoulder work is required on sections where the edge of the existing stabilized shoulder is below the face of the existing metal guardrail.
2. Lengths of new shoulder sections are shown on plan Sht. Nos. 6 thru 7 and on tables on Sht. No. 9.

LEGEND FOR AS-BUILT POSTINGS	
~~	Squiggly line for as-built deletion
~~100.00~~	Double line for as-built deletion
Roadway	Text for as-built posting

STATE OF HAWAII
DEPARTMENT OF TRANSPORTATION
HIGHWAYS DIVISION

TYPICAL SECTIONS

KAUMUALII HIGHWAY BIKEWAY IMPROVEMENTS
Huleia Stream to Bridge Rice Street
Federal Aid Project No. STP-050-1(19)

Scale: As Shown — Date: May, 1997

SHEET No. 1 OF 2 SHEETS

ORIGINAL PLAN	SURVEY PLOTTED BY	DATE 10-22-96
	DRAWN BY Lopez	
	TRACED BY	
NOTE BOOK Kalimanon	DESIGNED BY Lopez	
	QUANTITIES BY	
N:\Hwy\Kal\dgn	CHECKED BY	