FED. ROAD DIST. NO.	STATE	PROJ. NO.	FISCAL YEAR	SHEET NO.	TOTAL SHEETS
HAWAII	HAW.	50D-01-11M	2012	12	31

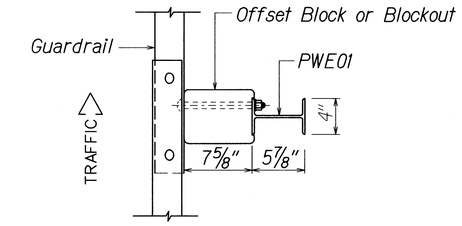

PLAN

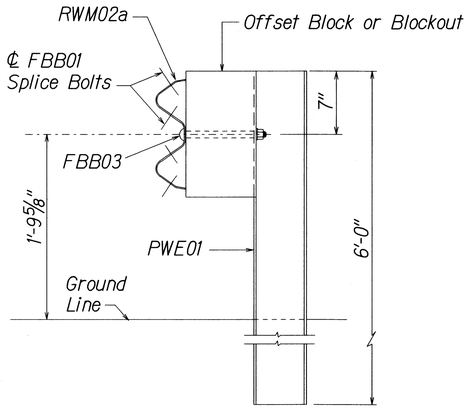

ELEVATION

STRONG POST W-BEAM GUARDRAIL

(SGR04a)

NOTE:
All Holes are
3/4" Dia.

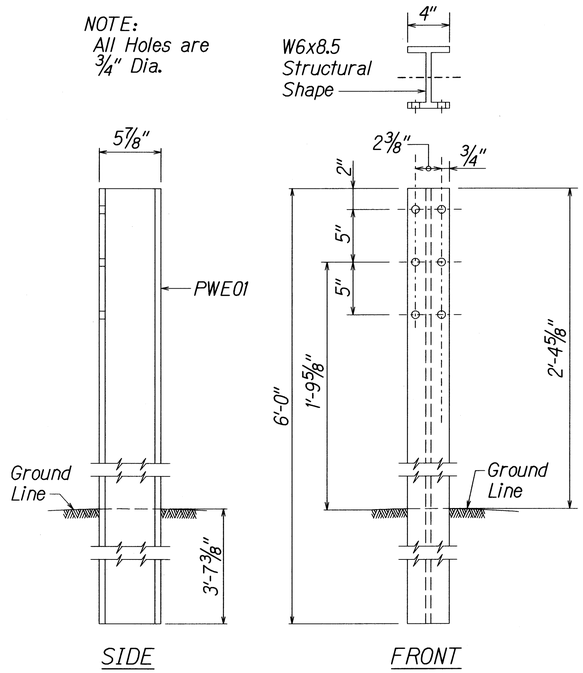

SIDE

FRONT

W-BEAM STRONG POST (PWE01)

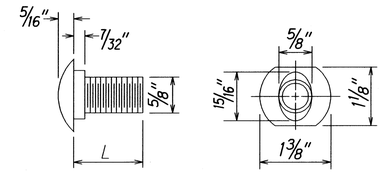

DESIGNATOR	L
FBB01	1 3/8"
FBB02	2"
FBB03	10"

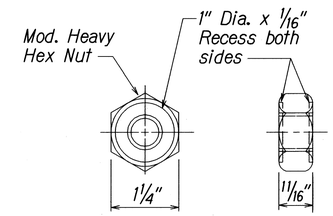

GUARDRAIL BOLTS AND RECESSED NUT

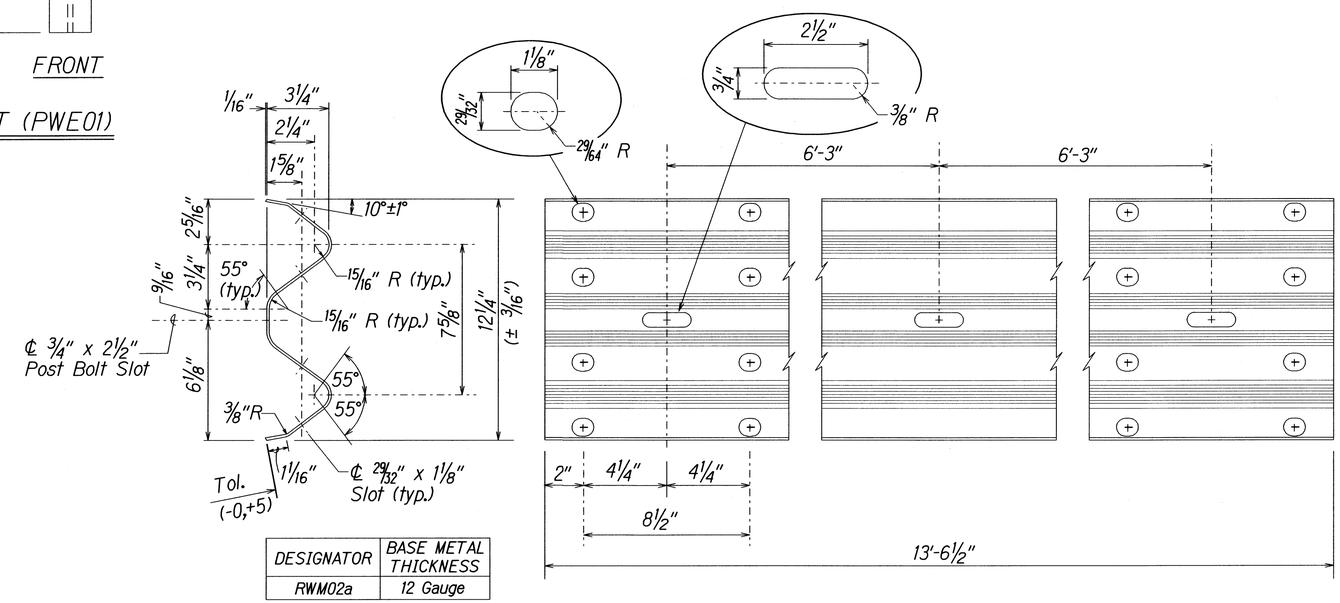

DESIGNATOR	BASE METAL THICKNESS
RWM02a	12 Gauge

2 SPACE W-BEAM GUARDRAIL (RWM02a)

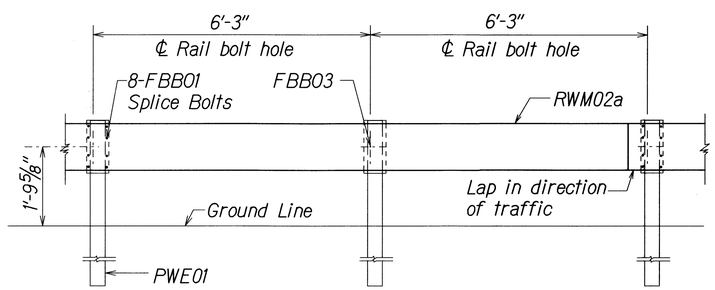

ELEVATION

STRONG POST W-BEAM GUARDRAIL WITH

RECYCLED OFFSET BLOCK OR PLASTIC BLOCKOUT

ORIGINAL PLAN	SURVEY PLOTTED BY	DATE
	DRAWN BY	
	TRACED BY	
NOTE BOOK	DESIGNED BY	
N/A	QUANTITIES BY	
N/A	CHECKED BY	

STATE OF HAWAII
DEPARTMENT OF TRANSPORTATION
HIGHWAYS DIVISION

STRONG POST W-BEAM GUARDRAIL

KAUMUALII HIGHWAY RESURFACING
Kipu Road to Huleia Bridge
Proj. No. 50D-01-11M

Scale: Not to Scale Date: January 2012

SHEET No. 2 OF 3 SHEETS