FED. ROAD DIST. NO.	STATE	FED. AID PROJ. NO.	FISCAL YEAR	SHEET NO.	TOTAL SHEETS
HAWAII	HAW.	STP-050-1(037)	2011	23	32

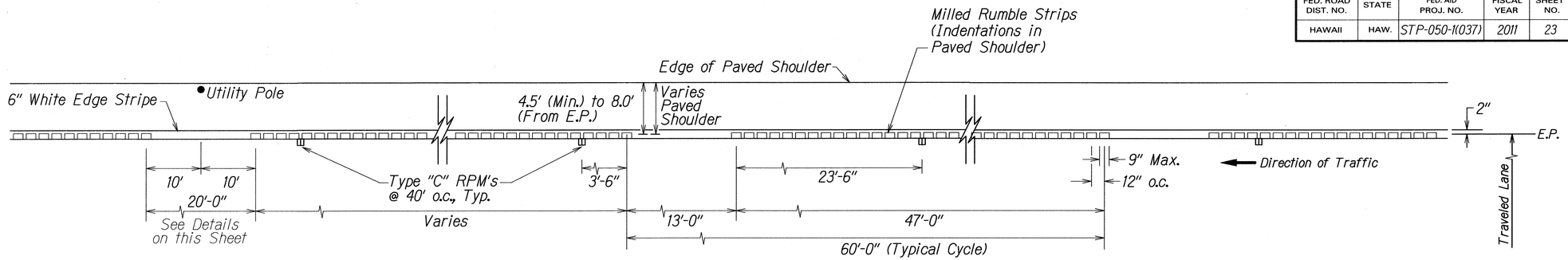

PLAN - EDGELINE MILLED RUMBLE STRIP (4.5' Min. to 8.0' SHOULDER)
Not to Scale

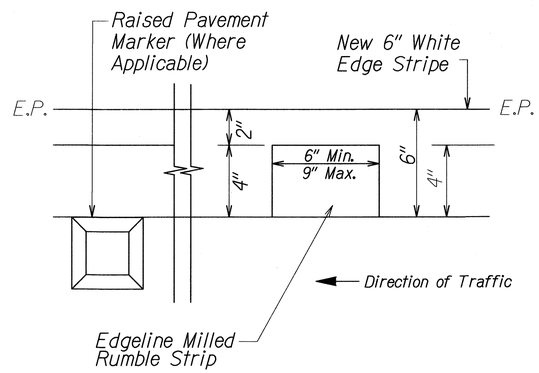

DETAIL - EDGELINE MILLED RUMBLE STRIP AT 6" WHITE EDGE STRIPE
Not to Scale

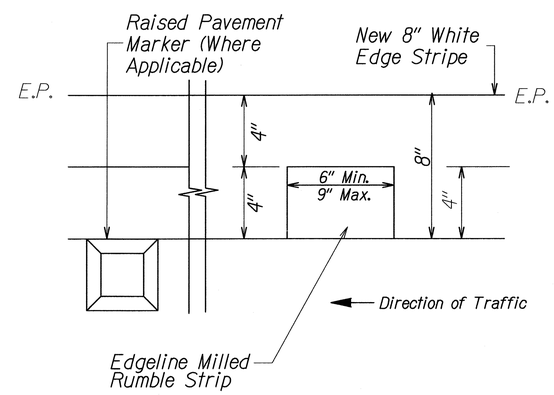

DETAIL - EDGELINE MILLED RUMBLE STRIP AT 8" WHITE EDGE STRIPE
Not to Scale

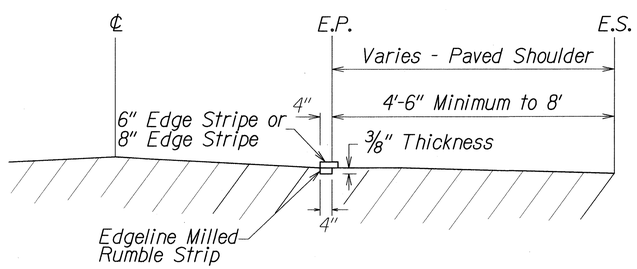

LONGITUDINAL SECTION - EDGELINE MILLED RUMBLE STRIP
Not to Scale

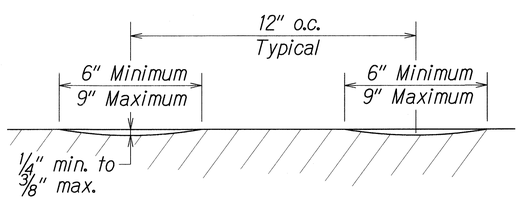

CROSS SECTION - EDGELINE MILLED RUMBLE STRIP
Not to Scale

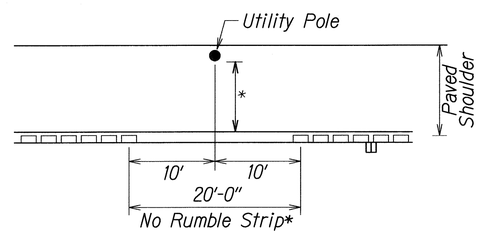

*Delete Rumble Strip if Clearance Between Edge of Pavement Striping & Utility Pole is Less Than 3'

DETAIL - CONDITION WHERE UTILITY POLE EXISTS
Not to Scale

NOTES:

1. Edgeline milled rumble strips may be installed for paved shoulder width of 3' minimum to 4.5' from edge of pavement (E.P.)
2. The method of constructing the edgeline milled rumble strip shall be submitted to the Engineer for acceptance prior to the actual work.
3. Dimensions shown are approximate. Adjust rumble strip spacing to coordinate with pavement marking prior to installation.
4. Raised pavement markers shall be installed on level surface between the rumble strips. Do not install raised pavement markers inside the milled area.
5. The construction of the edgeline milled rumble strip and 13-foot gaps shall be paid for under Item No. 615.0200 - 4-Inch Milled Rumble Strip, Edgeline.
6. The milling apparatus and removal of existing pavement markings will not be paid for separately and shall be considered incidental to Item 615.0200 - 4-Inch Milled Rumble Strip, Edgeline.
7. Rumble strips shall be installed along all shoulders, except at right turn deceleration and acceleration lanes, as noted on the plans.
8. Do not place Type "C" Raised Pavement markers within 2 ft. of the 13 ft. Rumble Strip opening.
9. Do not install edgeline rumble strips on bridge decks.
10. Where at-grade bridges are present, rumble strips shall end/begin 20 L.F. beyond the existing bridge deck joints/concrete approach slab.
11. Edgeline Rumble Strips are to be installed before the edge of pavement stripe and before the installation of the Type "C" raised pavement markers.
12. Hot spray thermoplastic shall be used for solid line markings within the edgeline milled rumble strip area.

ORIGINAL PLAN	SURVEY PLOTTED BY	DATE
	DRAWN BY	02/09
	TRACED BY	02/09
NOTE BOOK	DESIGNED BY	
No.	QUANTITIES BY	
	CHECKED BY	

STATE OF HAWAII
DEPARTMENT OF TRANSPORTATION
HIGHWAYS DIVISION

EDGELINE MILLED RUMBLE STRIP
DETAIL FOR SHOULDER 3' TO 4.5'

KAUMUALII HIGHWAY RESURFACING
Kipu Road to Huleia Bridge
Fed. Aid Proj. No. STP-050-1(037)

Scale: As Shown Date: May, 2011

SHEET No. T3 OF 11 SHEETS