FED. ROAD DIST. NO.	STATE	FED. AID PROJ. NO.	FISCAL YEAR	SHEET NO.	TOTAL SHEETS
HAWAII	HAW.	ARR-050-1(036)	FY13/14	Model	131

Notes:
Contractor shall submit sidewalk jointing plans for approval by the Engineer.

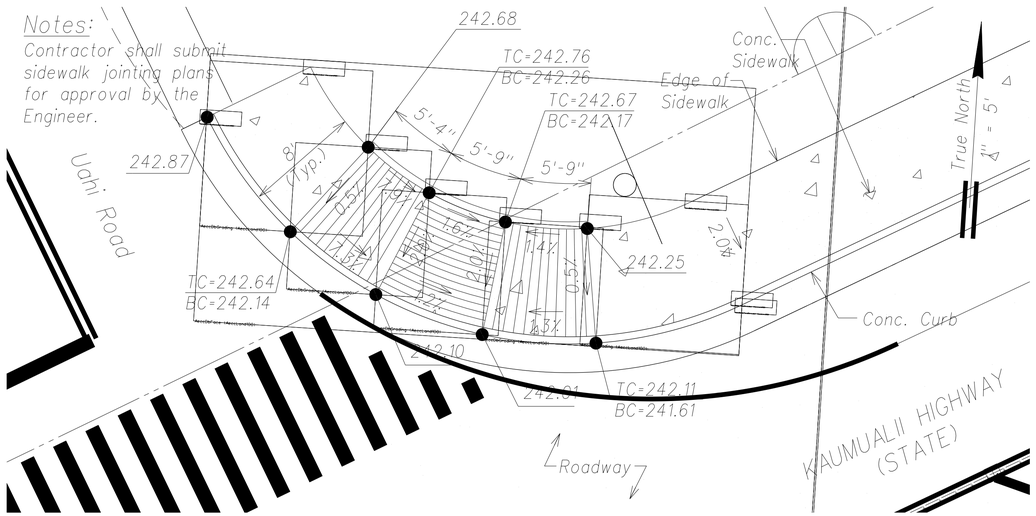

Curb Ramp 1 (Type "B")
Scale: 1" = 5'

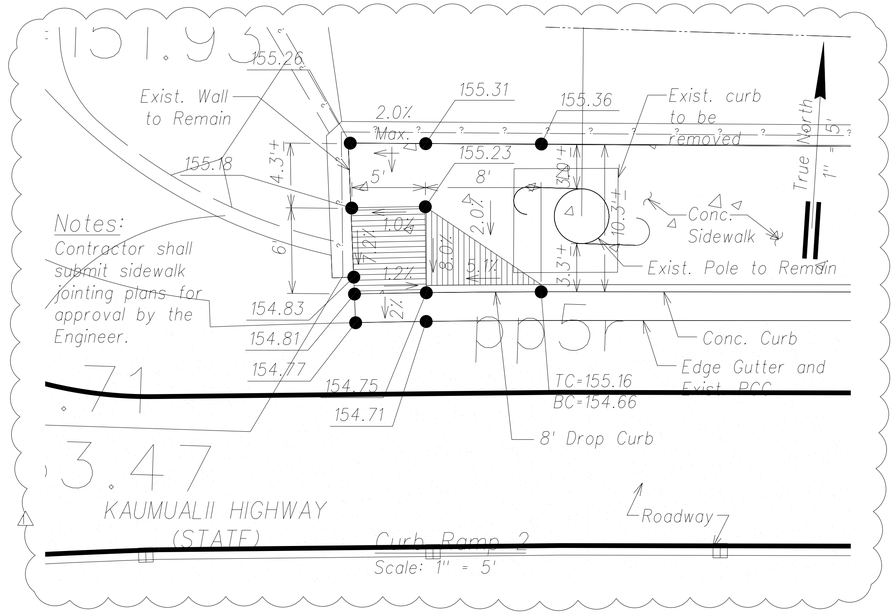

Notes:
Contractor shall submit sidewalk jointing plans for approval by the Engineer.

Curb Ramp 2
Scale: 1" = 5'

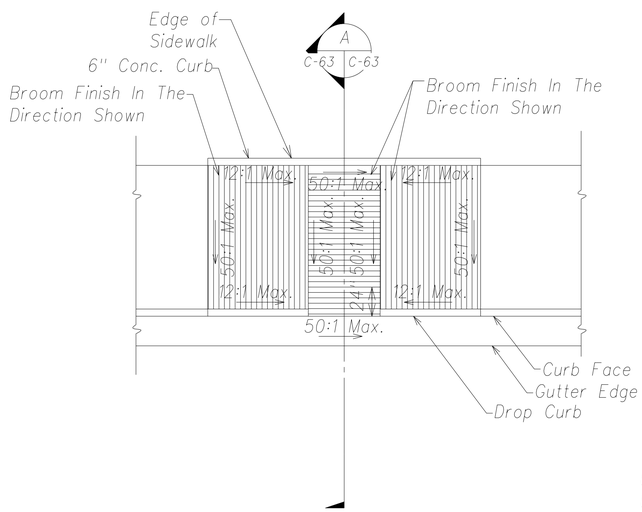

Plan

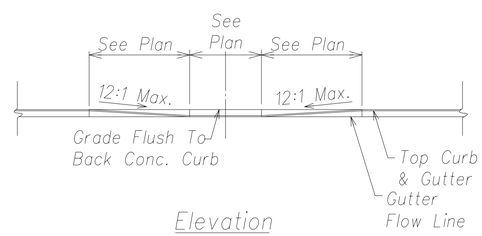

Elevation

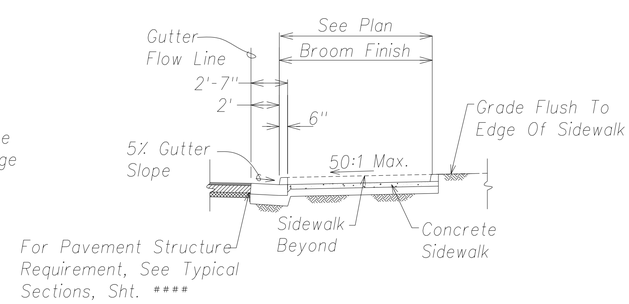

Section A C-63 C-63

Curb Ramp (Type "B")
Not to Scale

Graphic Scale:
1" = 5'
5' 0 5' 10'
Scale in Feet

Date	Revision
07/30/14	Add Curb Ramp 2 detail.

MICHAEL H. OKAMOTO
LICENSED PROFESSIONAL ENGINEER
No. 8624-C
HAWAII, U.S.A.

THIS WORK WAS PREPARED BY ME OR UNDER MY SUPERVISION AND CONSTRUCTION OF THIS PROJECT WILL BE UNDER MY OBSERVATION.

SIGNATURE — EXPIRATION DATE OF THE LICENSE: April 30, 2016

STATE OF HAWAII
DEPARTMENT OF TRANSPORTATION
HIGHWAYS DIVISION

CURB RAMP DETAILS

PHASE 1 - KAUMUALII HIGHWAY
LIHUE MILL BRIDGE TO RICE STREET
PHASE 2 - NAWILIWILI STREAM BRIDGE
AND MAUKA WIDENING

Scale: As Shown — Date: March 25, 2013

SHEET No. C-63 OF 84 SHEETS

ORIGINAL PLAN — NOTE BOOK — No. ____
SURVEY PLOTTED BY ____ DATE
DRAWN BY ____
TRACED BY ____
DESIGNED BY ____
QUANTITIES BY ____
CHECKED BY ____

"AS-BUILT"

C.Model S1