FED. ROAD DIST. NO.	STATE	~~FED. AID~~ PROJ. NO.	FISCAL YEAR	SHEET NO.	TOTAL SHEETS
HAWAII	HAW.	50BC-01-89	1990	6	7

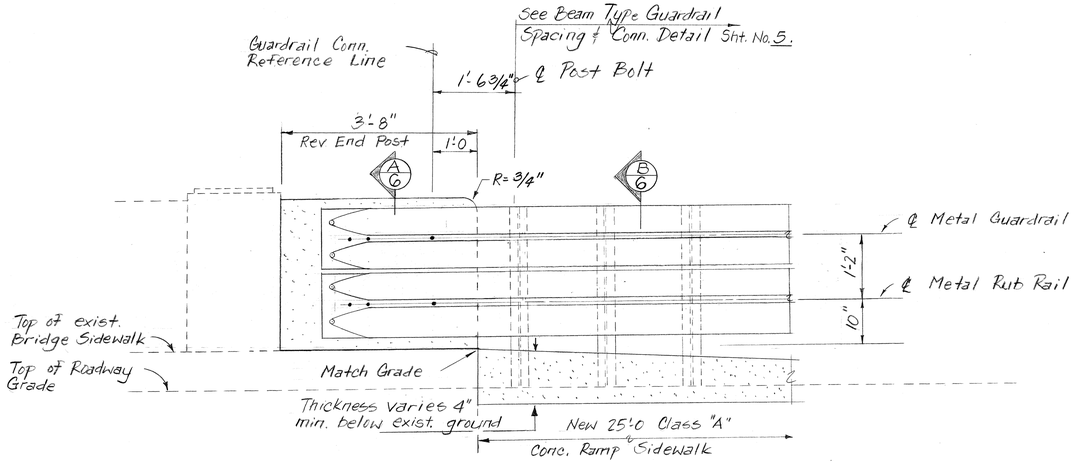

DETAILS - CONNECTION OF METAL GUARDRAIL TO REVISED END POST

Scale : 3/4" = 1'-0"

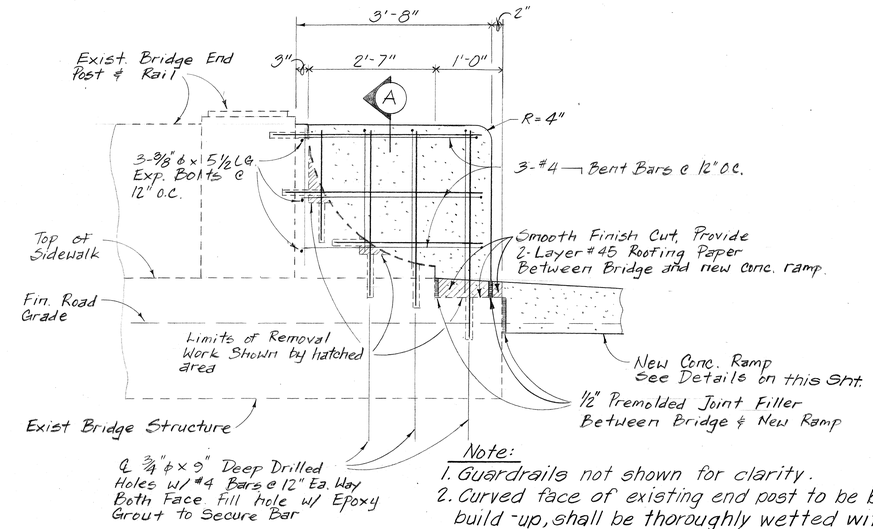

Note:
1. Guardrails not shown for clarity.
2. Curved face of existing end post to be bonded with concrete build-up, shall be thoroughly wetted with clean water and scrubbed with solution of not more than one part Hydrochloric (Muriatic) Acid to nine parts water, followed immediately by thoroughly rinsing with clean water.

DETAILS - NEW END POST AT WAIMEA BRIDGE

Scale : 3/4" = 1'-0"

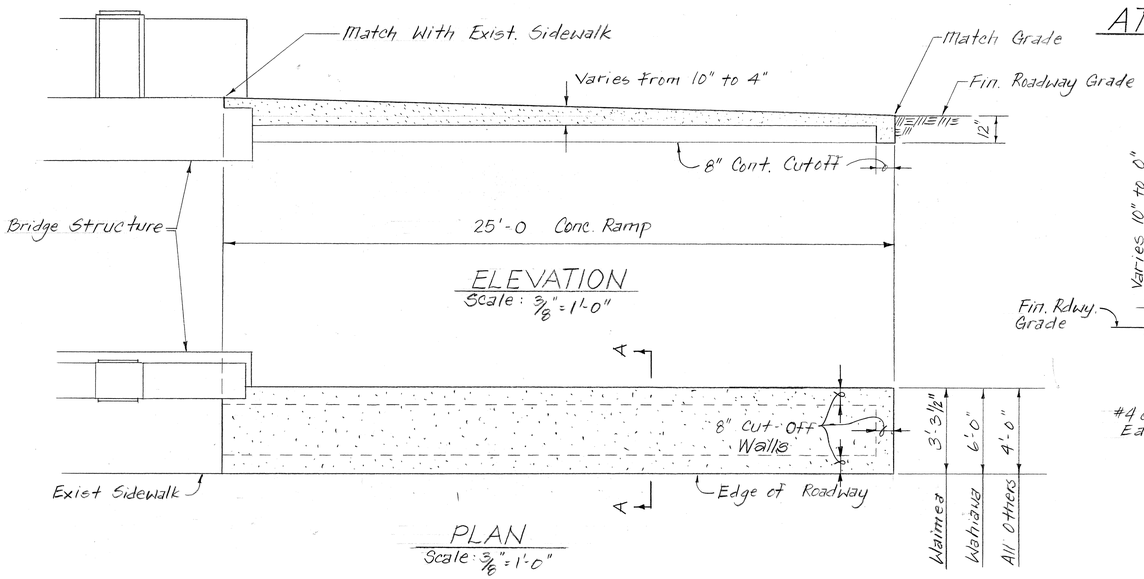

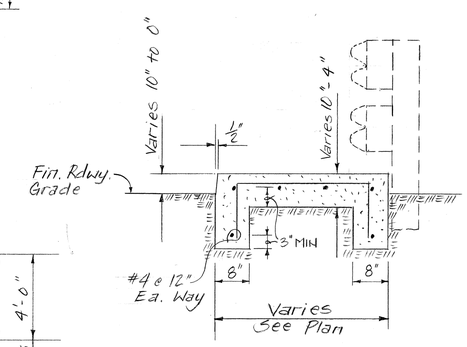

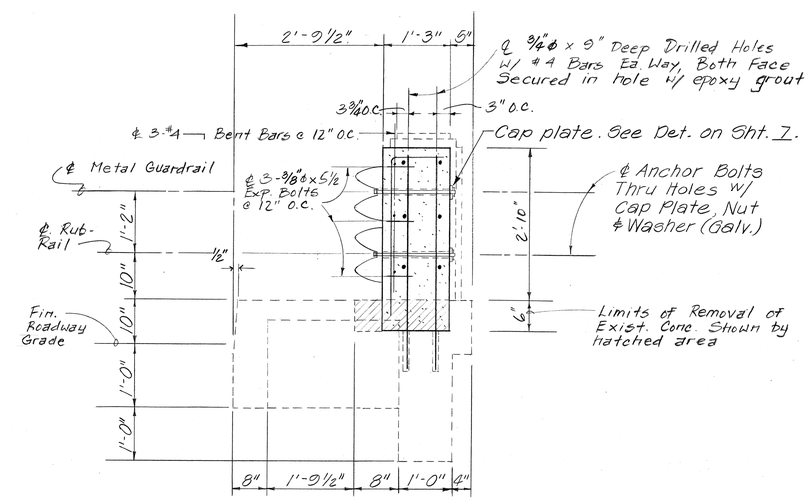

TYPICAL CONCRETE RAMP DETAILS

Note:
Guardrail not shown for clarity

ORIGINAL PLAN	SURVEY PLOTTED BY	DATE
	DRAWN BY	
	TRACED BY	
NOTE BOOK	DESIGNED BY	
	QUANTITIES BY	
No.	CHECKED BY	

STATE OF HAWAII
DEPARTMENT OF TRANSPORTATION
HIGHWAYS DIVISION

DETAILS - CONC. RAMP
REVISED BRIDGE END POST
KAUMUALII HIGHWAY
GUARDRAIL IMPROVEMENTS AT VARIOUS LOCATIONS
WAHIAWA BRIDGE TO WAIMEA BRIDGE
PROJECT NO. 50BC-01-89

Scale: As Shown Date: June, 1989

SHEET No. 1 OF 1 SHEETS