FED. ROAD DIST. NO.	STATE	FED. AID PROJ. NO.	FISCAL YEAR	SHEET NO.	TOTAL SHEETS
HAWAII	HAW.	BR-F-050-1(7)	1988	25	75

INDEX

ESTIMATED QUANTITIES

ITEM NO.	ITEM	UNIT	QUANTITIES
202.0440	Removal of Existing Timber Bridge	Lump Sum	
206.6000	Structure Excavation for Bridges	Cu. Yd.	2109.10 ~~1,950~~ C.Y.
206.7000	Structure Backfill	Cu. Yd.	399.70 ~~434~~ C.Y.
206.8000	Filter Material	Cu. Yd.	55.30 ~~53~~ C.Y.
503.1092	Concrete in Bridge (Except Footings)	Lump Sum	(1,705 C.Y.)
503.1093	Concrete in Bridge Footing	Lump Sum	(343 C.Y.)
504.4500	Type PG IV Prestressed Concrete Girders	Lump Sum	(3,702 L.F.)
505.0001	Pile Driving Equipment Expense (Not to Exceed $8,000)	Lump Sum	
505.0310	Precast Prestressed Concrete Piles, Furnished	Lin. Ft.	5021.50 ~~5,047~~ L.F.
505.3100	Precast Prestressed Concrete Piles, Driven	Lin. Ft.	2324.40 ~~2,685~~ L.F.
505.6100	Drilled Holes in Embankment for Piles	Lin. Ft.	1710.00 ~~1,700~~ L.F.
507.1000	Metal Bridge Railing - One Rail on Parapet	Lin. Ft.	858.10 ~~803~~ L.F.
507.6000	Concrete Railing And End Post	Lin. Ft.	941.50 ~~941~~ L.F.
602.0090	Reinforcing Steel in Bridge	Lump Sum	(476,200 lbs)
612.0200	Grouted Rubble Slope Protection	Cu. Yd.	761.50 ~~541~~ C.Y.
505.0020	Test Piles, Driven	Lin. Ft.	280.50 ~~315~~ L.F.

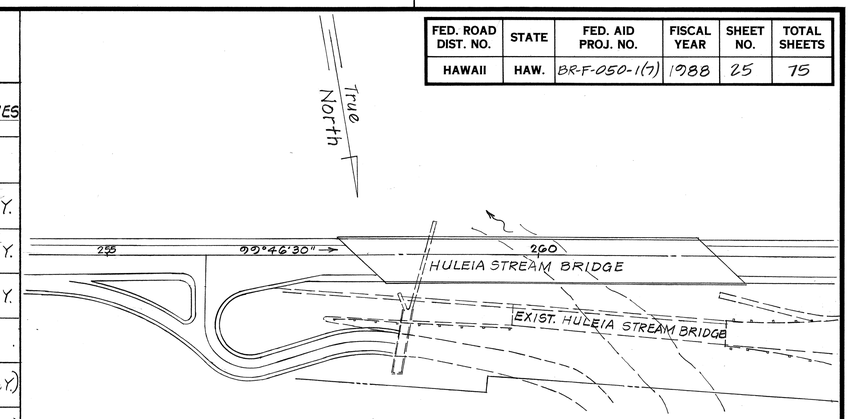

LOCATION PLAN
Not to Scale

ORIGINAL PLAN		SURVEY PLOTTED BY		DATE
		DRAWN BY	S.A.	1/87
		TRACED BY		
		DESIGNED BY	D.C.O. & S.A.	
NOTE BOOK		QUANTITIES BY		
No.		CHECKED BY	D.C.O. & G.T.	1/87

STATE OF HAWAII
DEPARTMENT OF TRANSPORTATION
HIGHWAYS DIVISION

HULEIA STREAM BRIDGE

INDEX TO DRAWINGS
EST. QUANTITIES, LOCATION PLAN

KAUMUALII HWY.
PROJ. NO. BR-F-050-1(7)

Scale: As Noted Date: Aug. 1987

SHEET No. S1 OF 22 SHEETS

FED. ROAD DIST. NO.	STATE	FED. AID PROJ. NO.	FISCAL YEAR	SHEET NO.	TOTAL SHEETS
HAWAII	HAW.	BR-F-050-1(7)	1988	26	75

GENERAL STRUCTURAL NOTES

See State of Hawaii, Dept. of Transportation Standard Plans (1986), sht. no. B-01 & the following.

DESIGN SPECIFICATIONS:
AASHTO Standard Specifications for Highway Bridges (13th Edition) including interim specifications for 1984, 1985 & 1986.

DESIGN LIVE LOAD: HS-20-44

ALLOWABLE DESIGN STRESSES:
Reinforced Concrete : fc = 0.40 fc'
Reinforcing Steel : fs = 20,000 psi for Grade 40.
24,000 psi for Grade 60.
Prestressed Concrete : See Design Specifications

MATERIALS:
Reinforced Concrete : Class A unless noted otherwise.
Class BD for bridge deck
5,000 psi for pier columns, caps, pedestals & footings
Reinforcing Steel : ASTM A615, Grade 40, Grade 60.
Prestress Precast Piles: See Standard Plan sheets B-12 & B-13.
Exception : fc' = 6,000 psi.

CONSTRUCTION METHODS:
1. Piles shorter than 100' shall not be spliced.
2. Pre-drilled holes for piles shall extend at least thru the compacted fill embankment. See item 505.0100 for quantities.
3. Existing ground shall be removed to a depth of 5'-0" in the vicinity of approach embankments. Embankment construction of the approach fills shall have a relative compaction of 100%. Boulders, rock fragments, hardpan or cemented gravel larger than 6 inches in greatest dimension shall not be placed under the abutments where piles are to be driven.

FOUNDATION:
1. Design load* for pile = 50 tons.
2. For Boring Logs and their location, see sheet nos. S4 & S5.
3. The pile tip elevations shown on the plans are based on boring data.
4. The Contractor shall verify the type of surface soil before starting to drive any pile. The annular space around the piles in the drilled holes in embankment shall be backfilled as specified in the Special Provisions, Section 50503.
5. Test piles indicated in Foundation Plan shall be furnished 5' longer than regular piles.
6. Estimated downdrag load = 51 tons.

* Design load for piles excludes pile weight & estimated downdrag.

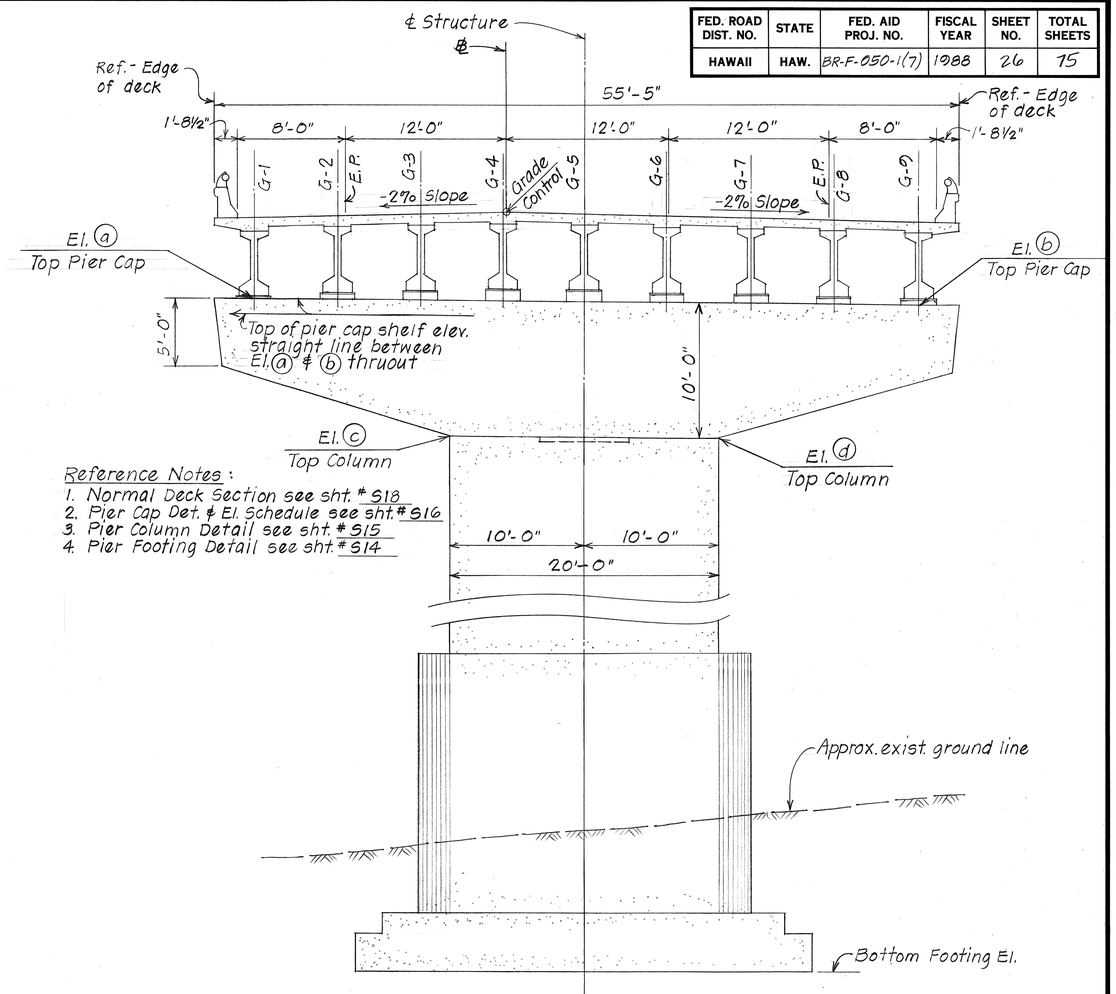

Reference Notes:
1. Normal Deck Section see sht. # S18
2. Pier Cap Det. & El. Schedule see sht. # S16
3. Pier Column Detail see sht. # S15
4. Pier Footing Detail see sht. # S14

TYPICAL PIER ELEVATION
Scale: 3/16" = 1'-0"

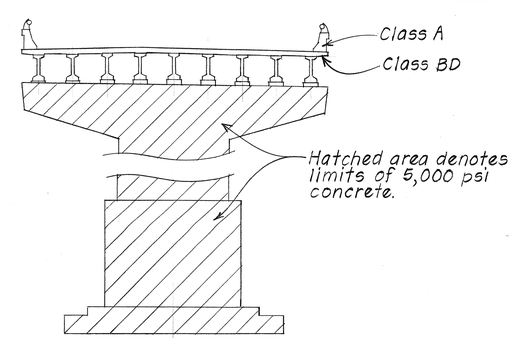

TYPICAL DETAIL SHOWING CLASS CONCRETE & LIMITS OF 5,000 PSI CONCRETE AT PIERS
Not to Scale

STATE OF HAWAII
DEPARTMENT OF TRANSPORTATION
HIGHWAYS DIVISION
HULEIA STREAM BRIDGE
GENERAL STRUCTURAL NOTES
TYPICAL PIER ELEVATION
KAUMUALII HWY.
PROJ. NO. BR-F-050-1(7)
Scale: As Noted Date: Aug. 1987

SHEET No. 52 OF 22 SHEETS

ORIGINAL PLAN		DATE
	SURVEY PLOTTED BY	
	DRAWN BY S.M.A.	7/87
	TRACED BY	
NOTE BOOK	DESIGNED BY D.C.O. & S.A.	7/87
	QUANTITIES BY T.K.M.	7/87
No.	CHECKED BY D.C.O. & G.T.	7/87

FED. ROAD DIST. NO.	STATE	FED. AID PROJ. NO.	FISCAL YEAR	SHEET NO.	TOTAL SHEETS
HAWAII	HAW.	BR-F-050-1(7)	1988	27	75

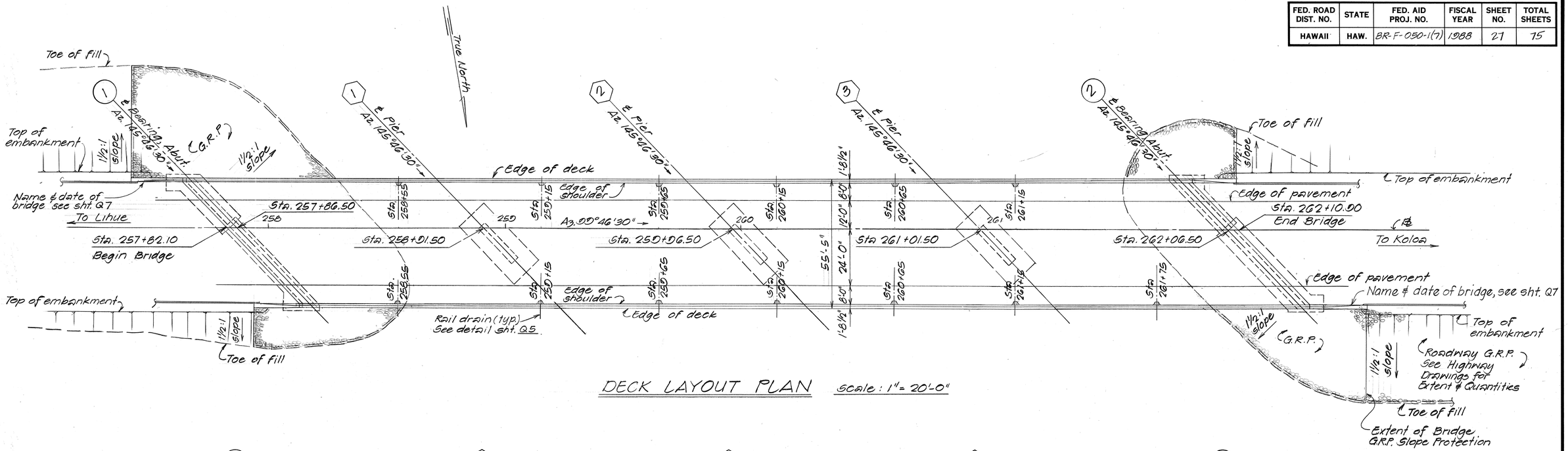

DECK LAYOUT PLAN Scale: 1" = 20'-0"

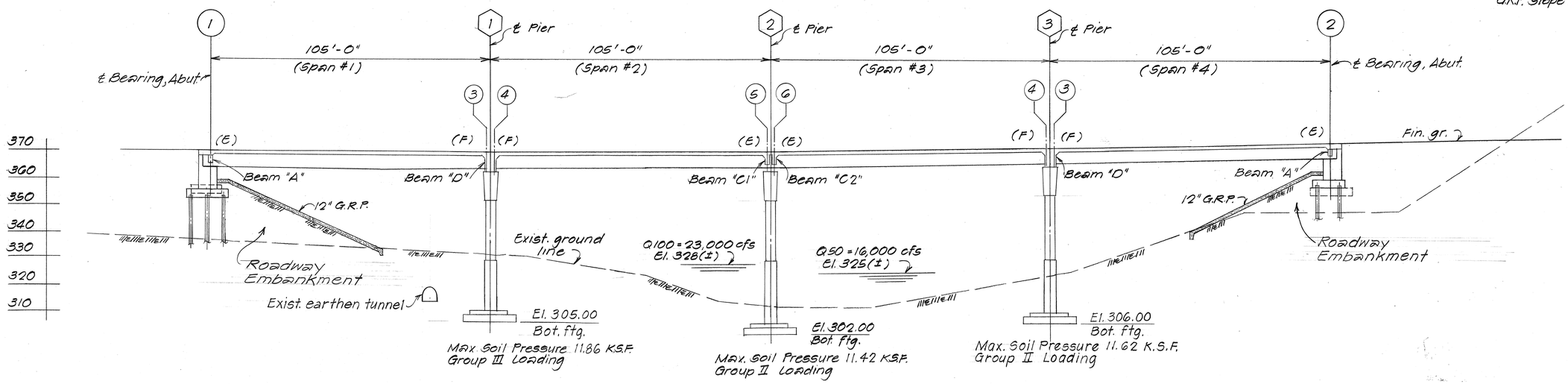

LONGITUDINAL SECTION ALONG ℄

Scale: 1" = 20'-0"

ORIGINAL PLANS		DATE
	SURVEY PLOTTED BY	
	DRAWN BY H.F.	1/87
	TRACED BY H.F.	1/87
NOTE BOOK	DESIGNED BY D.C.O. & S.A.	1/87
	QUANTITIES BY L.M.A. & H.F.	1/87
No.	CHECKED BY D.C.O. & G.T.	1/87

STATE OF HAWAII
DEPARTMENT OF TRANSPORTATION
HIGHWAYS DIVISION

HULEIA STREAM BRIDGE

LAYOUT PLAN, LONGITUDINAL SECTION ALONG ℄
KAUMUALII HWY.
PROJ. NO. BR-F-050-1(7)

Scale: As Noted Date: Aug. 1987

SHEET No. 33 OF 22 SHEETS

FED. ROAD DIST. NO.	STATE	FED. AID PROJ. NO.	FISCAL YEAR	SHEET NO.	TOTAL SHEETS
HAWAII	HAW.	BR-F-050-1(7)	1988	20	75

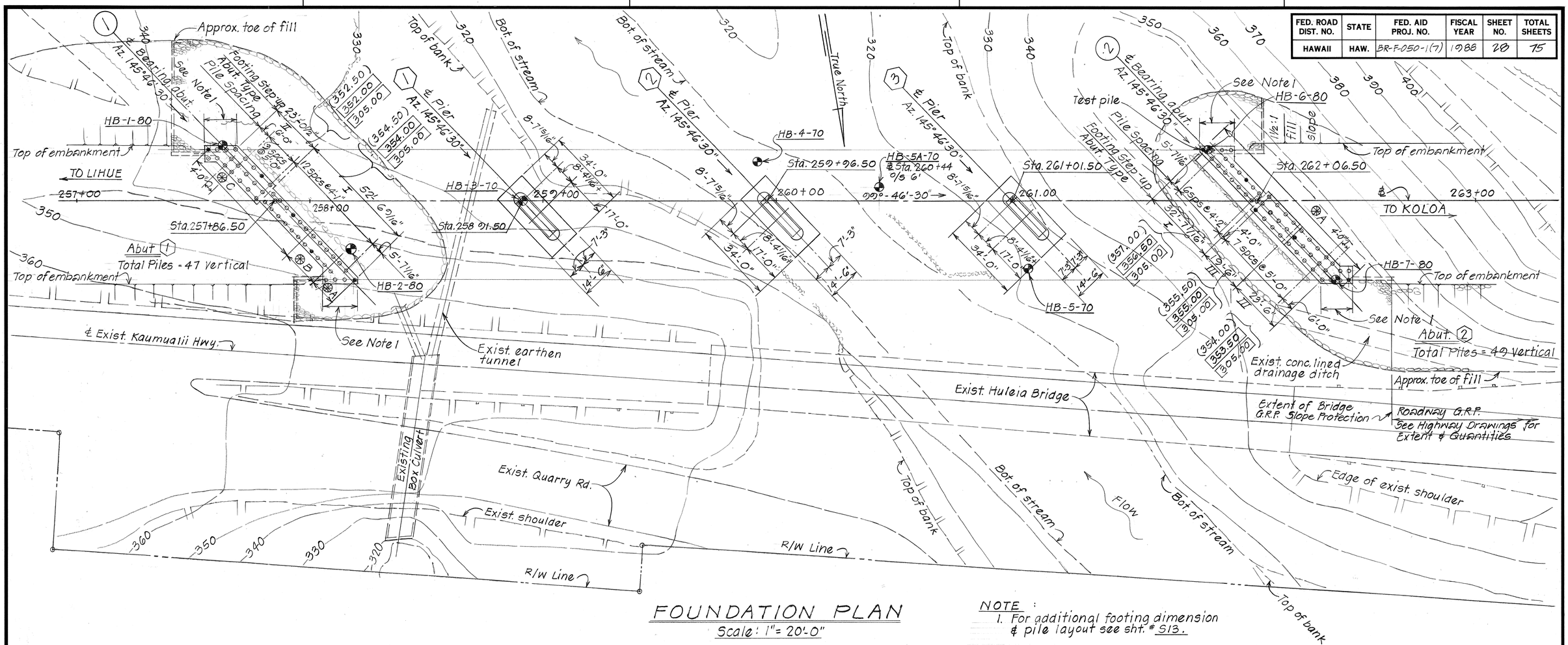

FOUNDATION PLAN

Scale: 1" = 20'-0"

NOTE:

1. For additional footing dimension & pile layout see sht. # S13.

LEGEND

- ⬡ = Denotes vertical piles
- ⬢ = Test piles
- (0.00) = Pile cut-off elevation
- [0.00] = Bottom footing elevation
- [0.00] = Pile tip elevation

⊛ Pre-Drill Tip Elevation

A = El. 340
B = El. 335
C = El. 330

ORIGINAL PLAN		
	SURVEY PLOTTED BY	DATE
	DRAWN BY L.M.A.	1/87
	TRACED BY L.M.A.	1/87
NOTE BOOK	DESIGNED BY D.C.O. & S.A.	1/87
	QUANTITIES BY L.M.A. & H.F.	1/87
No.	CHECKED BY D.C.O. & G.T.	1/87

STATE OF HAWAII
DEPARTMENT OF TRANSPORTATION
HIGHWAYS DIVISION

HULEIA STREAM BRIDGE

FOUNDATION PLAN

KAUMUALII HWY.
PROJ. NO. BR-F-050-1(7)

Scale: As Noted Date: Aug 1987

SHEET No. S4 OF 22 SHEETS

FED. ROAD DIST. NO.	STATE	FED. AID PROJ. NO.	FISCAL YEAR	SHEET NO.	TOTAL SHEETS
HAWAII	HAW.	BR-F-050-1(7)	1988	29	75

HB-1
Elev. 337.9

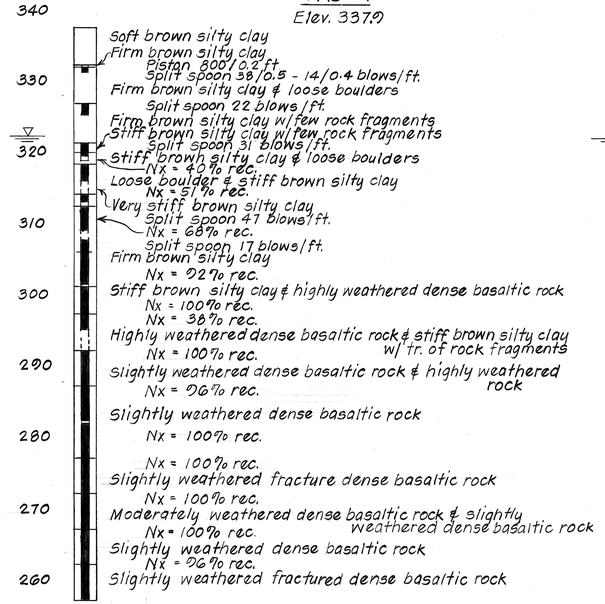

HB-2
Elev. 337.4

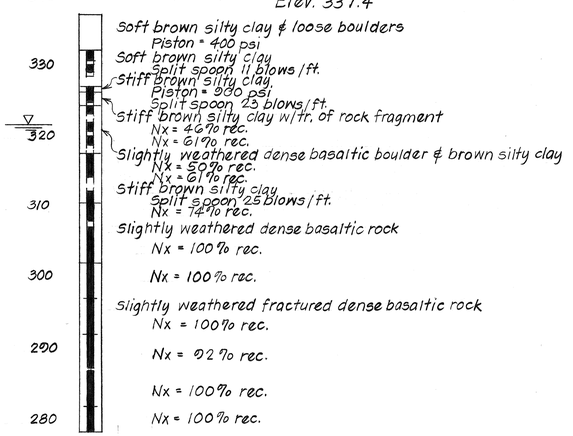

HB-3
Elev. 322.7

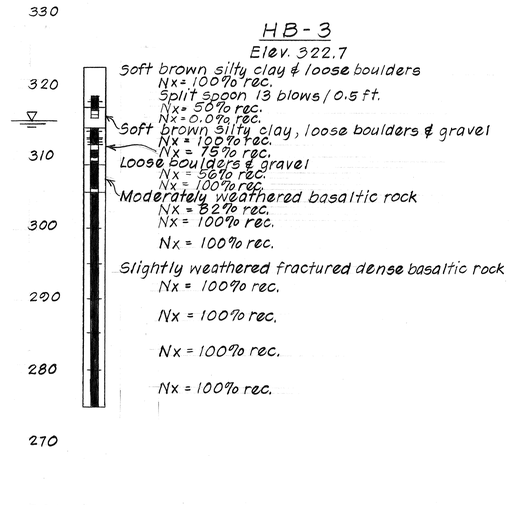

HB-4
Elev. 314.9

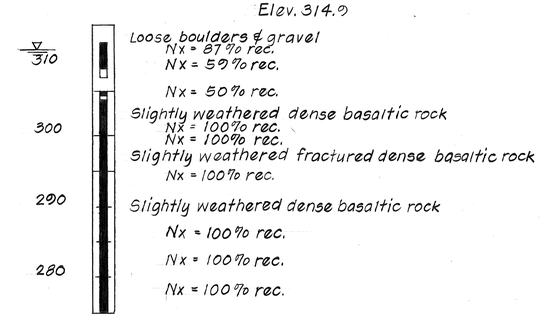

HB-5
Elev. 322.0

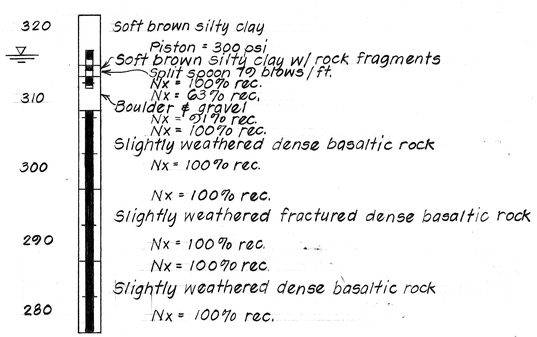

HB-5A
Elev. 318.3

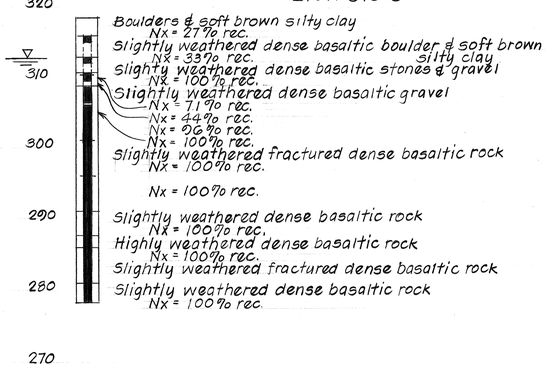

HB-6
Elev. 346.9

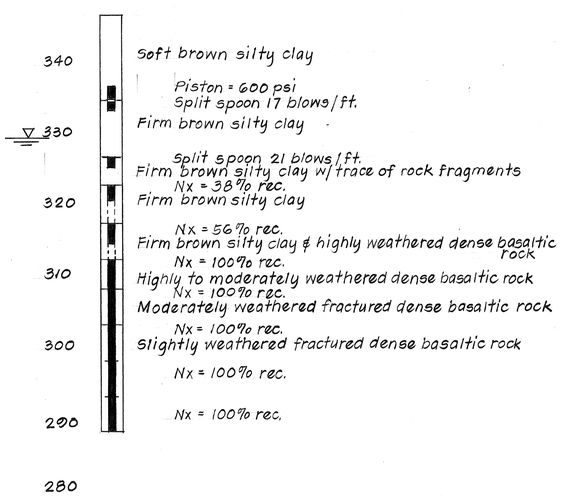

HB-7
Elev. 347.0

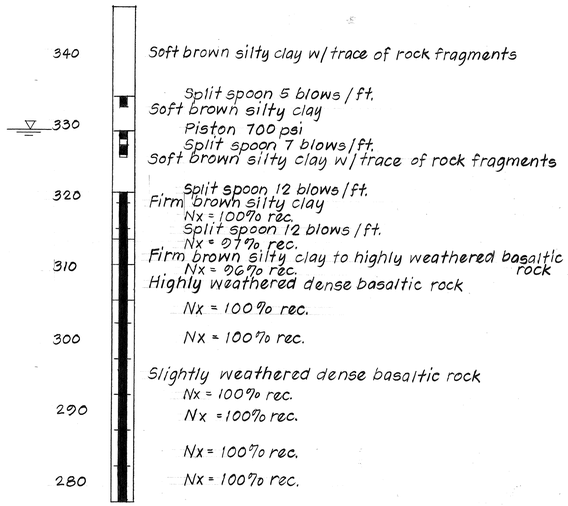

BORING LOGS

STATE OF HAWAII
DEPARTMENT OF TRANSPORTATION
HIGHWAYS DIVISION

HULEIA STREAM BRIDGE

BORING LOGS

KAUMUALII HWY.
PROJ. NO. BR-F-050-1(7)

Scale: As Noted Date: Aug. 1987

SHEET No. 35 OF 22 SHEETS

ORIGINAL PLAN
SURVEY PLOTTED BY
DRAWN BY
TRACED BY
DESIGNED BY
QUANTITIES BY
CHECKED BY
DATE
NOTE BOOK
No.

FED. ROAD DIST. NO.	STATE	FED. AID PROJ. NO.	FISCAL YEAR	SHEET NO.	TOTAL SHEETS
HAWAII	HAW.	BR-F-050-1(7)	1988	30	75

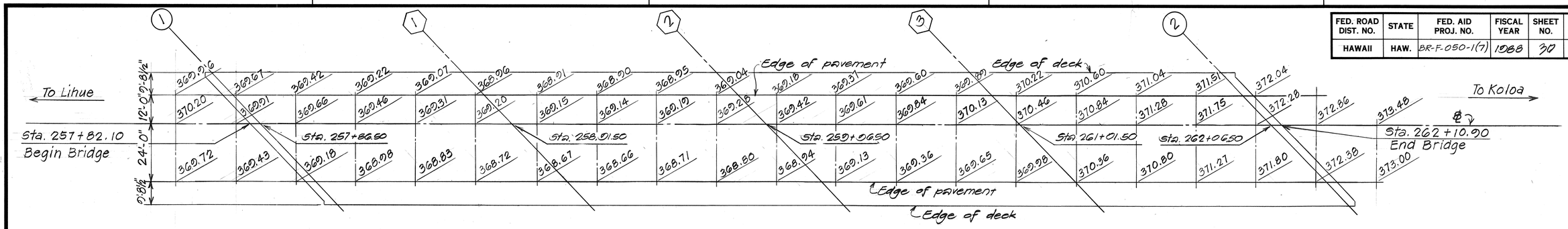

DECK FINISH GRADE

Scale: 1"-20'-0"

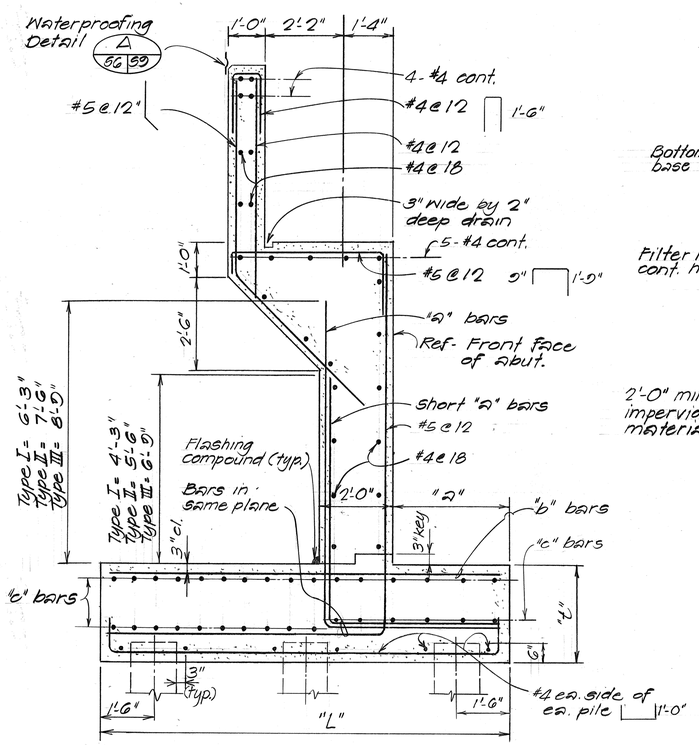

TYPICAL ABUTMENT SECTION

Scale: 1/2"=1'-0"

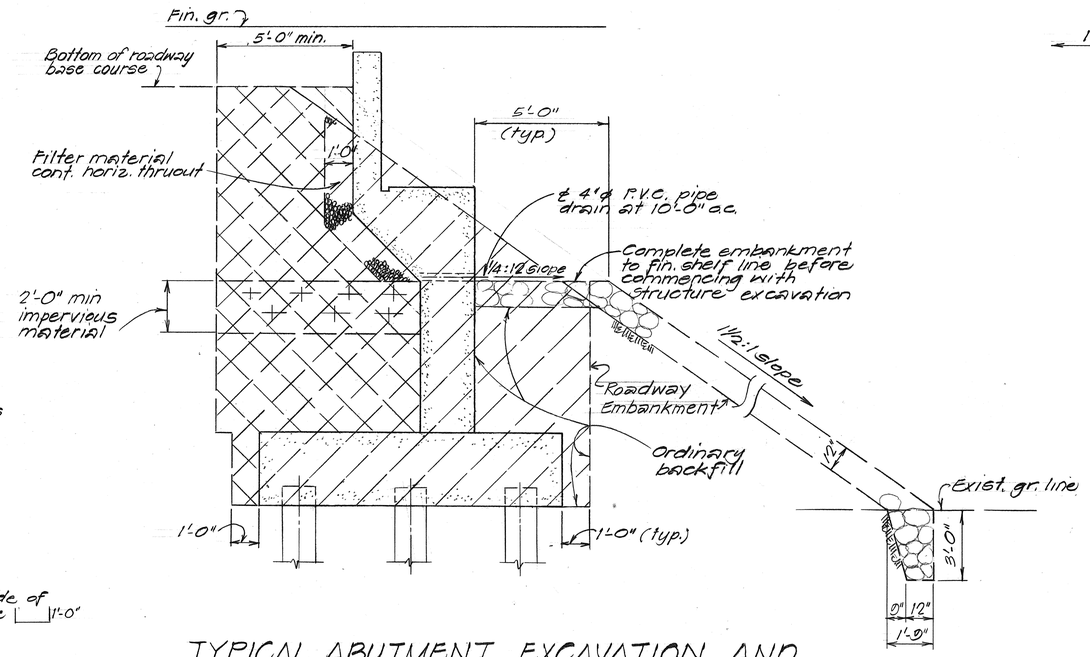

TYPICAL ABUTMENT EXCAVATION AND BACKFILL PAY LIMITS

Not to Scale

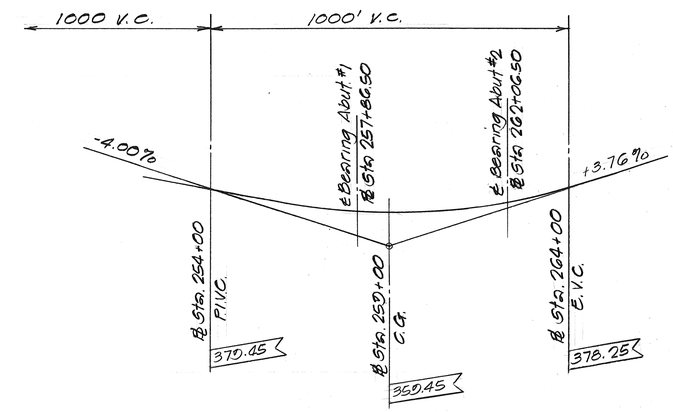

BASE LINE PROFILE

Not to Scale

ABUTMENT - DIMENSION AND REINFORCING SCHEDULE

ITEM \ ABUT. TYPE	I	II	III
"a"	1'-6"	3'-0"	3'-0"
"b"	2'-0"	2'-9"	2'-9"
"L"	7'-9"	11'-0"	11'-0"
"a" bars	#6 @ 11	#7 @ 12	#7 @ 10
short "a" bars	#6 @ 11	#7 @ 12	#7 @ 10
"b" bars	#7 @ 12	#8 @ 12	#8 @ 12
"c" bars	#6 @ 11	#6 @ 11½	#6 @ 11½

Notes:
1. Hatched area shown thus ▨ denote limits of structure excavation payline.
2. Hatched area shown thus ▨ denote limits of structure backfill.

Reference Notes:
1. For additional structure excavation, backfill & pay limits, see Standard Plan B-03.

ORIGINAL PLAN			DATE
	SURVEY PLOTTED BY		
	DRAWN BY	H.F.	1/87
	TRACED BY	" "	1/87
	DESIGNED BY	D.C.O. & S.A.	1/87
NOTE BOOK	QUANTITIES BY	H.F. & L.M.A.	1/87
No.	CHECKED BY	D.C.O. & G.T.	1/87

STATE OF HAWAII
DEPARTMENT OF TRANSPORTATION
HIGHWAYS DIVISION

HULEIA STREAM BRIDGE

DECK FINISH GRADE, TYP. ABUT. SECT.
ABUT. EXC. & BACKFILL, & ROADWAY PROFILE
KAUMUALII HWY.
PROJ. NO. BR-F-050-1(7)

Scale: As Noted Date: Aug. 1987

SHEET No. 56 OF 22 SHEETS

FED. ROAD DIST. NO.	STATE	FED. AID PROJ. NO.	FISCAL YEAR	SHEET NO.	TOTAL SHEETS
HAWAII	HAW.	BR-F-050-1(7)	1988	31	75

REFERENCE NOTE:
1. Bridge deck & superstructure not shown.
2. For concrete seats, hinge block, creep block & elastomeric bearing pad details see sht. Q2, Q3.
3. For concrete end post details see sht. Q7.
4. For pile spacings & location see Foundation Plan, sht. S4.
5. Top conc. seat El. Schedule, see sht. Q2.

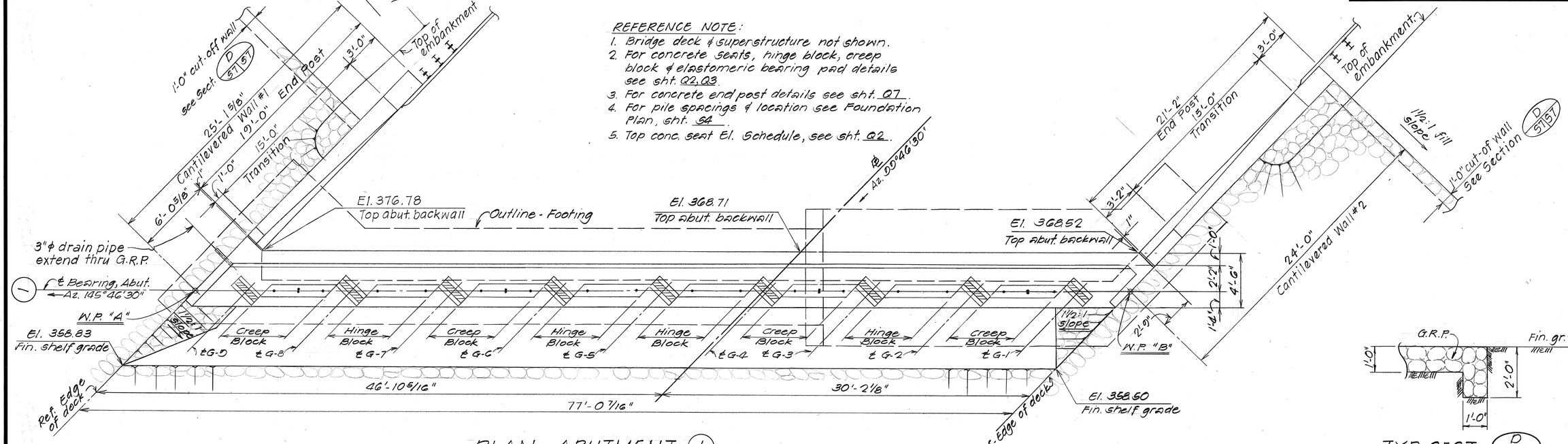

PLAN - ABUTMENT 1 Scale: 1/4" = 1'-0"

TYP. SECT. D 57/57 (G.R.P. CUT-OFF WALL) S8
Scale: ½" = 1'-0"

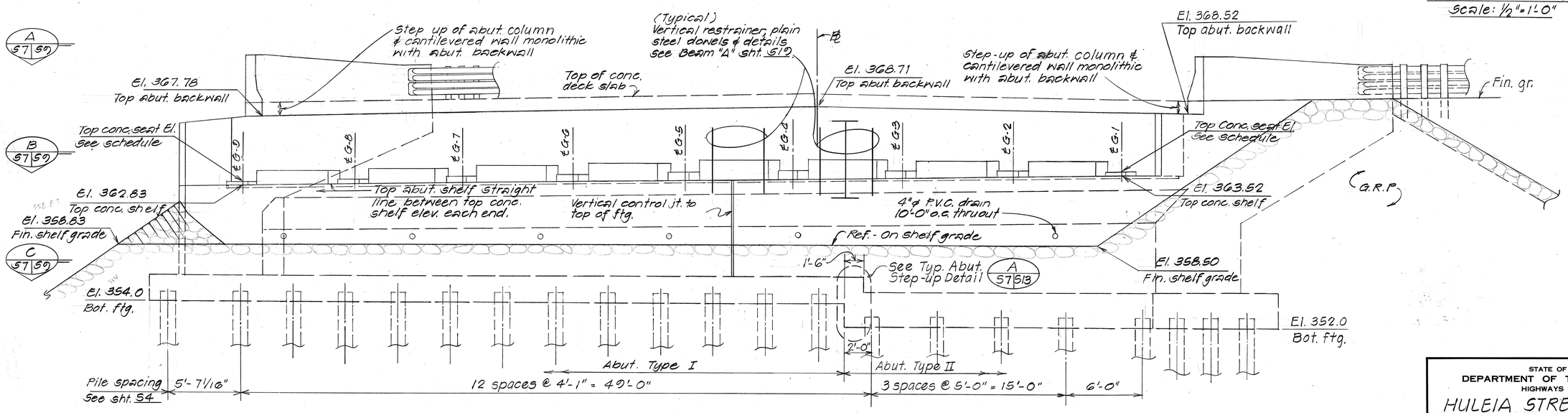

ELEVATION - ABUTMENT 1
Scale: 1/4" = 1'-0"

		DATE
SURVEY PLOTTED BY		
DRAWN BY	H.F.	1/87
TRACED BY	H.F.	1/87
DESIGNED BY	D.C.O.	1/87
QUANTITIES BY	H.F. & L.M.A.	1/87
CHECKED BY	D.C.O. & G.T.	1/87

ORIGINAL PLAN
NOTE BOOK
No.

STATE OF HAWAII
DEPARTMENT OF TRANSPORTATION
HIGHWAYS DIVISION

HULEIA STREAM BRIDGE
ABUTMENT 1 PLAN & ELEVATION

KAUMUALII HWY.
PROJ. NO. BR-F-050-1(7)
Scale: As Noted Date: Aug. 1987

SHEET No. 57 OF 22 SHEETS

FED. ROAD DIST. NO.	STATE	FED. AID PROJ. NO.	FISCAL YEAR	SHEET NO.	TOTAL SHEETS
HAWAII	HAW.	BR-F-050-1(7)	1988	32	75

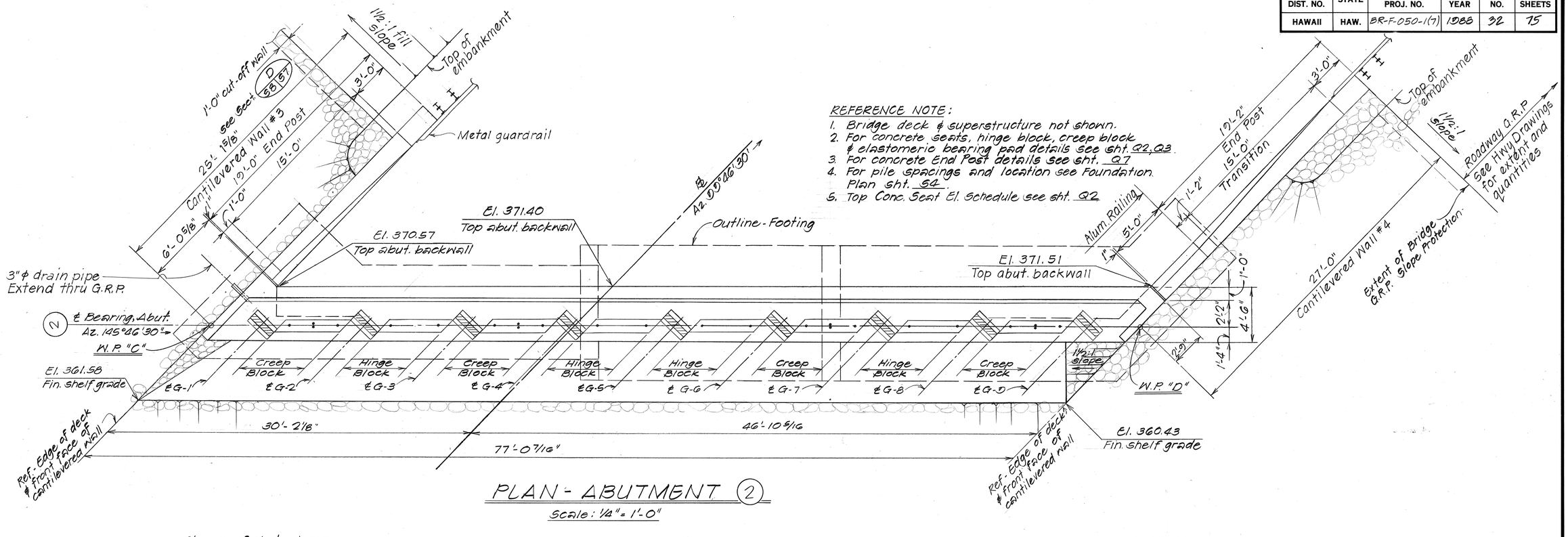

PLAN - ABUTMENT 2

Scale: 1/4" = 1'-0"

REFERENCE NOTE:

1. Bridge deck & superstructure not shown.
2. For concrete seats, hinge block, creep block & elastomeric bearing pad details see sht. Q2, Q3.
3. For concrete End Post details see sht. Q7
4. For pile spacings and location see Foundation Plan sht. S4.
5. Top Conc. Seat El. Schedule see sht. Q2

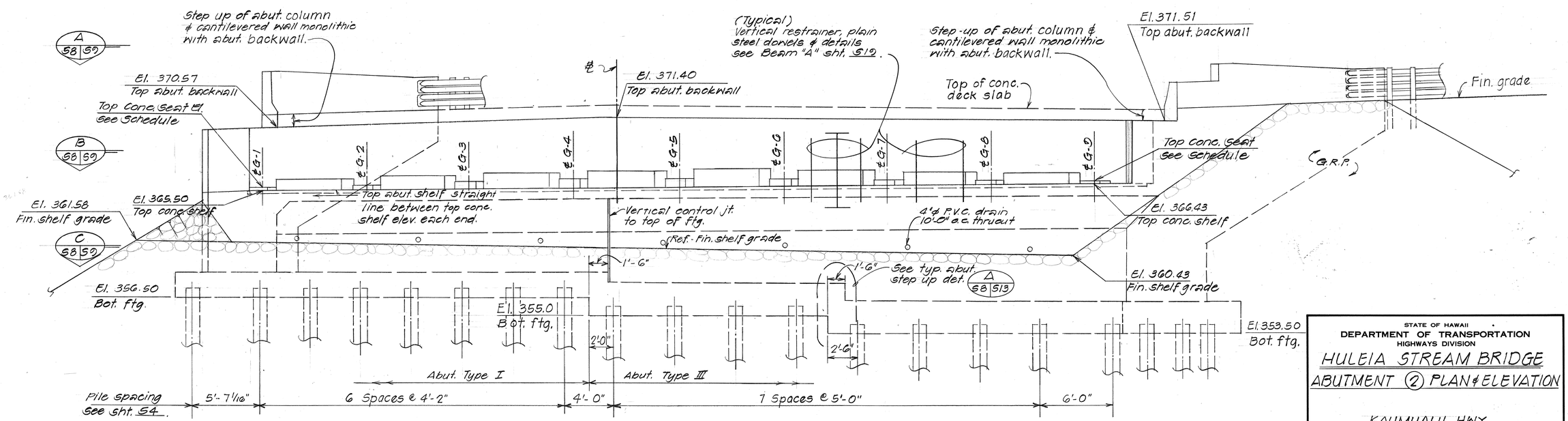

ELEVATION - ABUTMENT 2

Scale: 1/4" = 1'-0"

		DATE
SURVEY PLOTTED BY		
DRAWN BY	H.E.	7/87
TRACED BY	H.E.	7/87
DESIGNED BY	D.C.O.	7/87
QUANTITIES BY	H.E. & L.M.A.	7/87
CHECKED BY	D.C.O. & G.T.	7/87

ORIGINAL PLAN — NOTE BOOK — No.

STATE OF HAWAII
DEPARTMENT OF TRANSPORTATION
HIGHWAYS DIVISION

HULEIA STREAM BRIDGE

ABUTMENT 2 PLAN & ELEVATION

KAUMUALII HWY.
PROJ. NO. BR-F-050-1(7)

Scale: As Noted Date: Aug. 1987

SHEET No. 58 OF 22 SHEETS

FED. ROAD DIST. NO.	STATE	FED. AID PROJ. NO.	FISCAL YEAR	SHEET NO.	TOTAL SHEETS
HAWAII	HAW.	BR-F-050-1(7)	1988	33	75

NOTE:
Aluminum bridge rail not shown

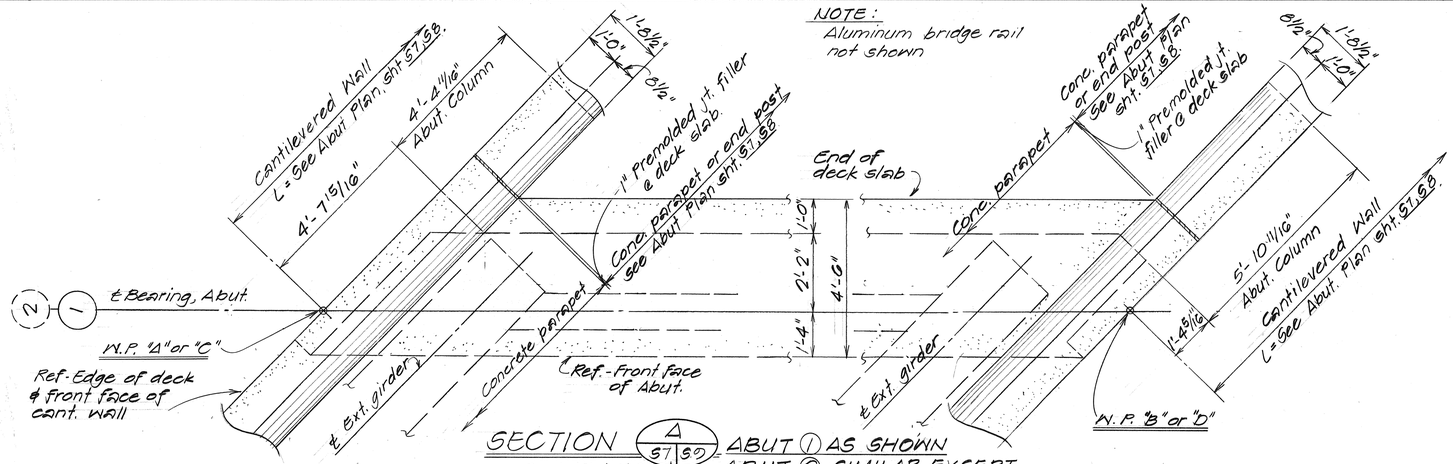

SECTION (A) S7 S9 ABUT ① AS SHOWN
Scale: 1/2" = 1'-0" S8 ABUT ② SIMILAR EXCEPT OTHERWISE NOTED

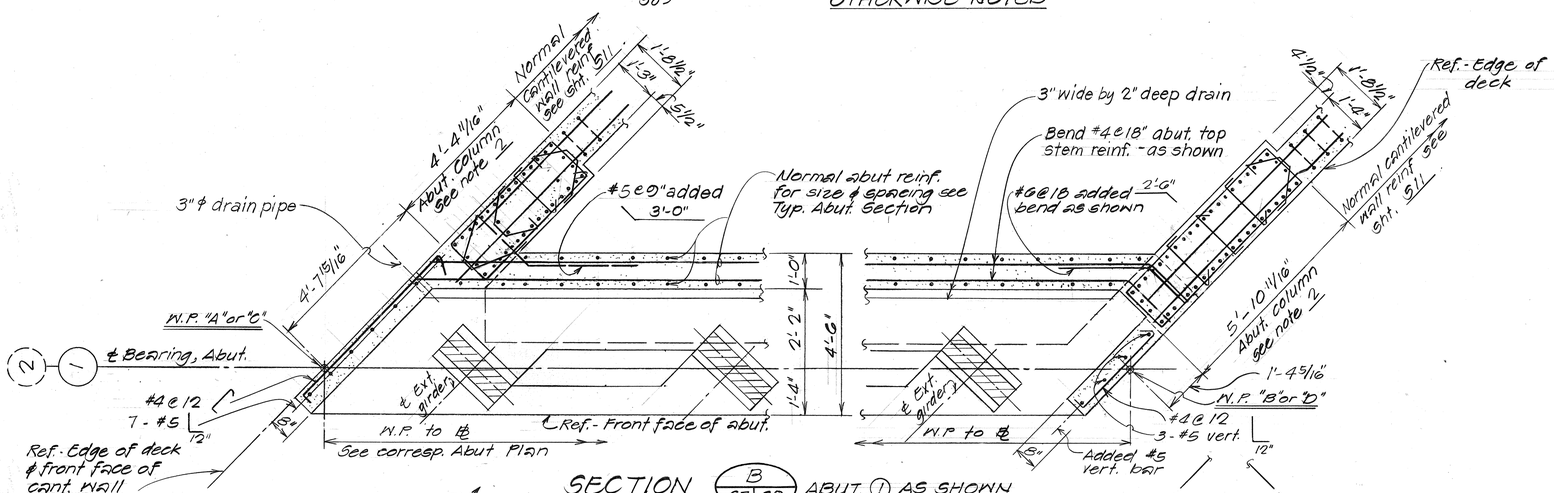

SECTION (B) S7 S9 ABUT. ① AS SHOWN
Scale: 1/2" = 1'-0" S8 ABUT. ② SIMILAR EXCEPT OTHERWISE NOTED

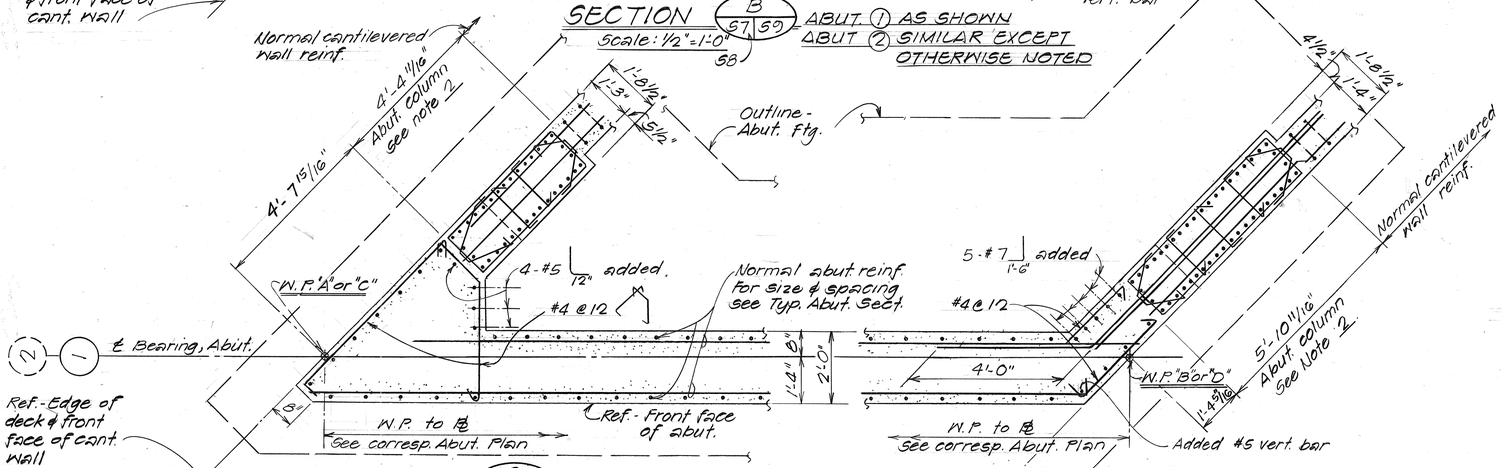

SECTION (C) S7 S9 ABUT. ① AS SHOWN
Scale: 1/2" = 1'-0" S8 ABUT. ② SIMILAR EXCEPT OTHERWISE NOTED

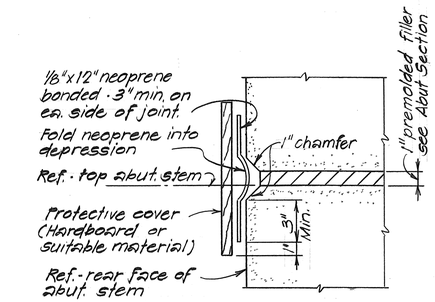

TYPICAL WATERPROOFING DETAIL (A) S6 S9
Not to Scale S19

Note: Waterproofing assemblage incidental to concrete

REFERENCE NOTE:
1. Refer to sht. S11 for Typ. Abut. Column Elevation & Cantilevered Wall.
2. Refer to sht. S12 for Abut. Column Reinf. & Tie Schedule.

ORIGINAL PLAN		DATE
	SURVEY PLOTTED BY	
	TRACED BY	1/87
	DESIGNED BY	1/87
NOTE BOOK	QUANTITIES BY	1/87
No.	CHECKED BY	1/87

STATE OF HAWAII
DEPARTMENT OF TRANSPORTATION
HIGHWAYS DIVISION

HULEIA STREAM BRIDGE
ABUTMENT ① & ② - SECTION (A), (B), (C)
KAUMUALII HWY.
PROJ. NO. BR-F-050-1(7)

Scale: As Noted Date: Aug. 1987

SHEET No. S9 OF 22 SHEETS

FED. ROAD DIST. NO.	STATE	FED. AID PROJ. NO.	FISCAL YEAR	SHEET NO.	TOTAL SHEETS
HAWAII	HAW.	BR-F-050-1(7)	1988	34	75

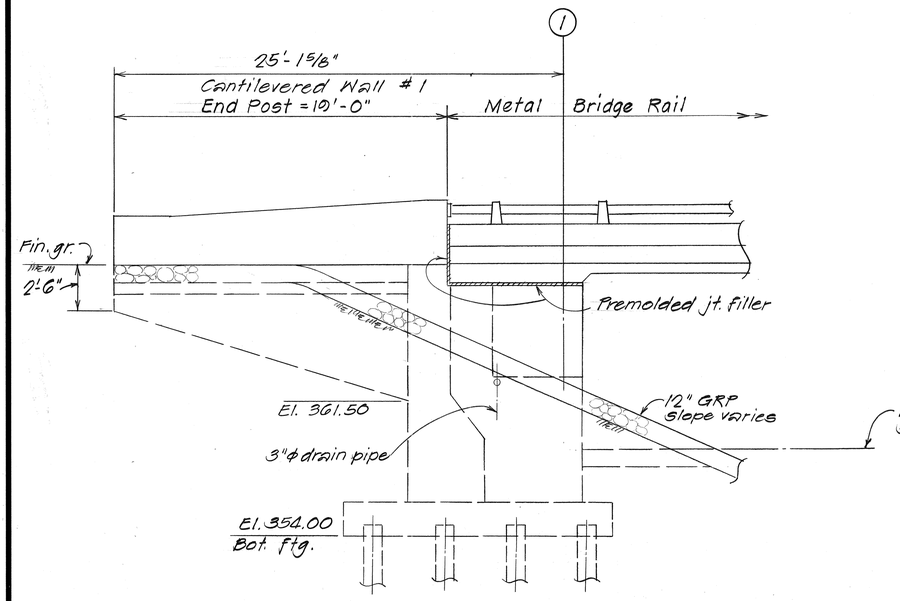

CANTILEVERED WALL #1

Scale: 1/4" = 1'-0"

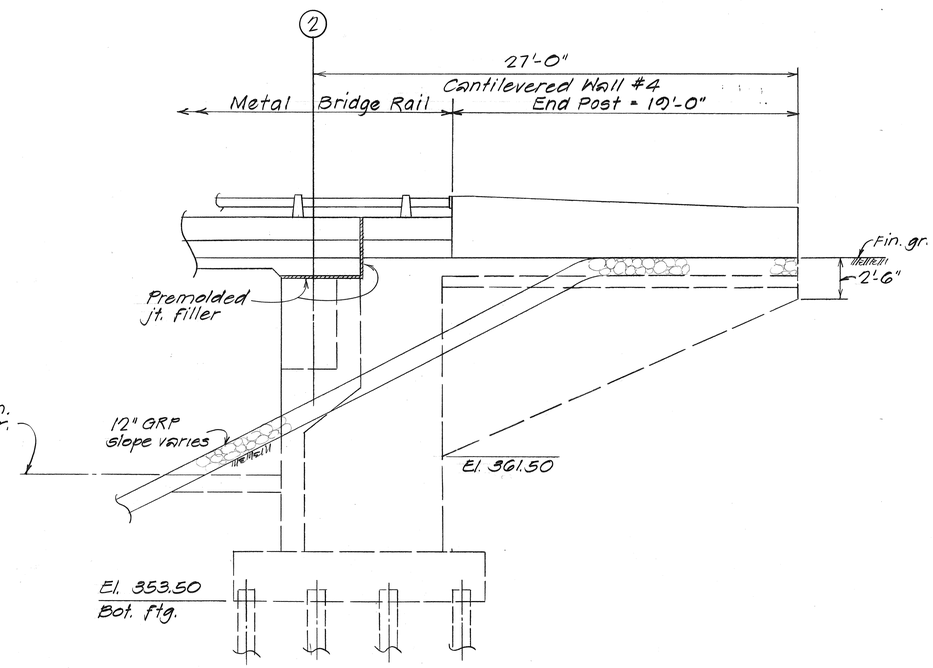

CANTILEVERED WALL #4

Scale: 1/4" = 1'-0"

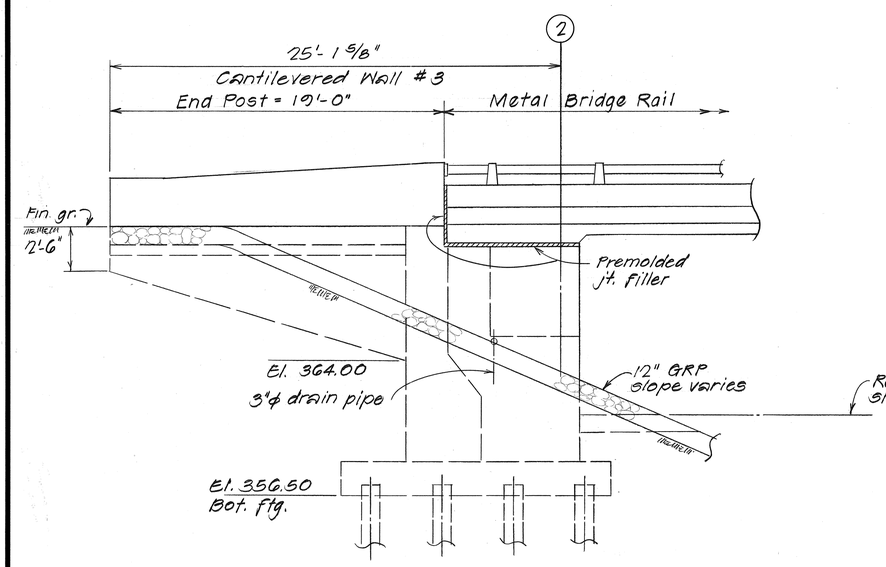

CANTILEVERED WALL #3

Scale: 1/4" = 1'-0"

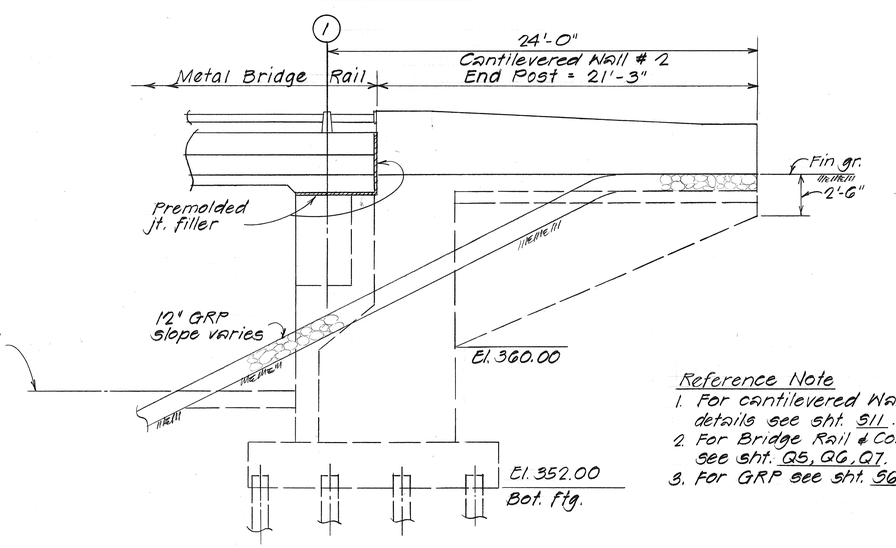

CANTILEVERED WALL #2

Scale: 1/4" = 1'-0"

Reference Note

1. For cantilevered Wall reinf. & details see sht. S11.
2. For Bridge Rail & Conc. End Post see sht. Q5, Q6, Q7.
3. For GRP see sht. S6 & S7.

SURVEY PLOTTED BY		DATE
DRAWN BY	H.E.	
TRACED BY	H.E.	
DESIGNED BY	R.E.O.	
QUANTITIES BY	H.E. & L.M.A.	
CHECKED BY	R.E.O. & G.T.	

ORIGINAL PLAN

NOTE BOOK No.

STATE OF HAWAII
DEPARTMENT OF TRANSPORTATION
HIGHWAYS DIVISION

HULEIA STREAM BRIDGE

CANTILEVERED WALL #1, #2, #3, & #4

KAUMUALII HWY.
PROJ. NO. BR-F-050-1(7)

Scale: As Noted Date: Aug. 1987

SHEET No. S10 OF 22 SHEETS

FED. ROAD DIST. NO.	STATE	FED. AID PROJ. NO.	FISCAL YEAR	SHEET NO.	TOTAL SHEETS
HAWAII	HAW.	BR-F-050-1(7)	1988	35	75

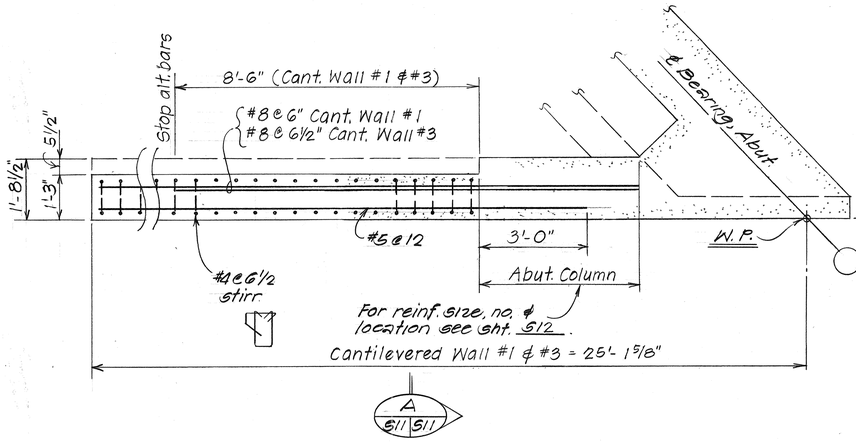

CANTILEVERED WALL #1 & #3

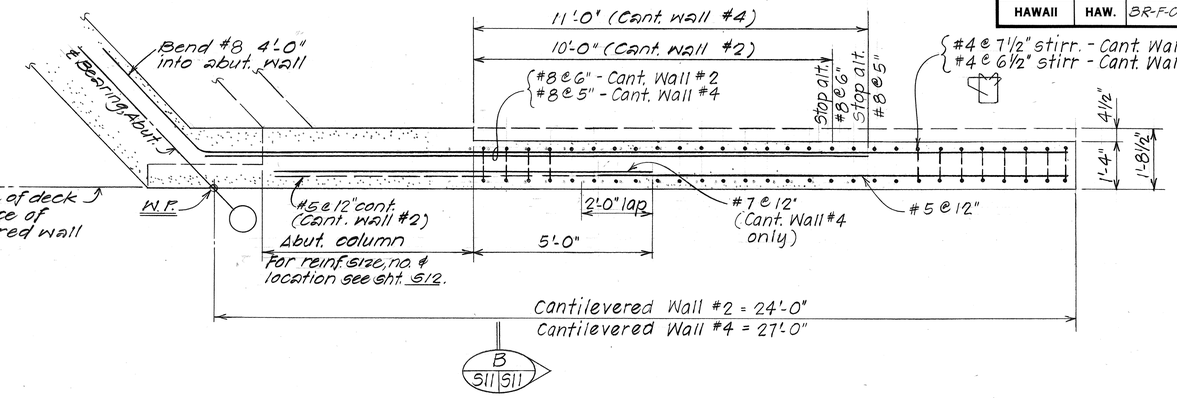

CANTILEVERED WALL #2 & #4

TYPICAL REINFORCING PLAN - CANTILEVERED WALL

Scale: ½" = 1'-0"

Reference Note:
1- Refer to sht. S12 for abutment column reinf. & ties schedule.
2- Refer to sht. S10 for cantilevered wall #1, 2, #3, & #4.

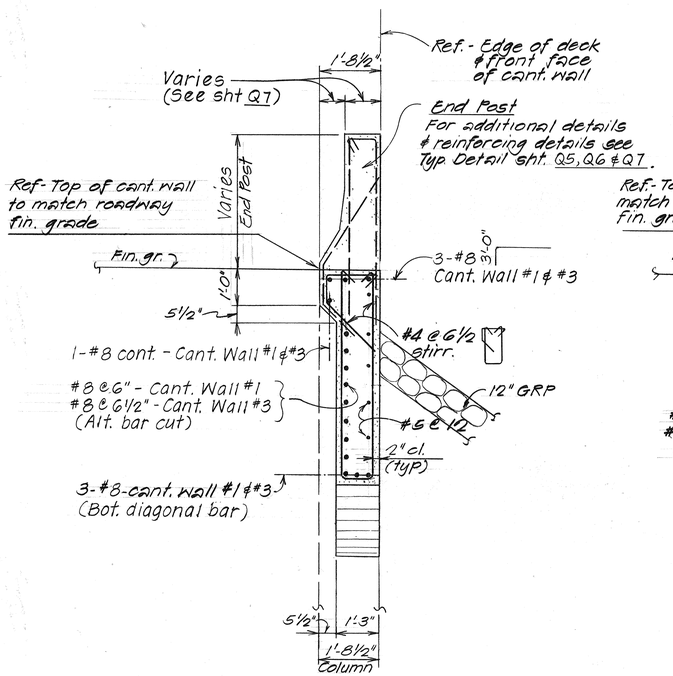

SECTION A (S11 S11)

Scale: ½" = 1'-0"

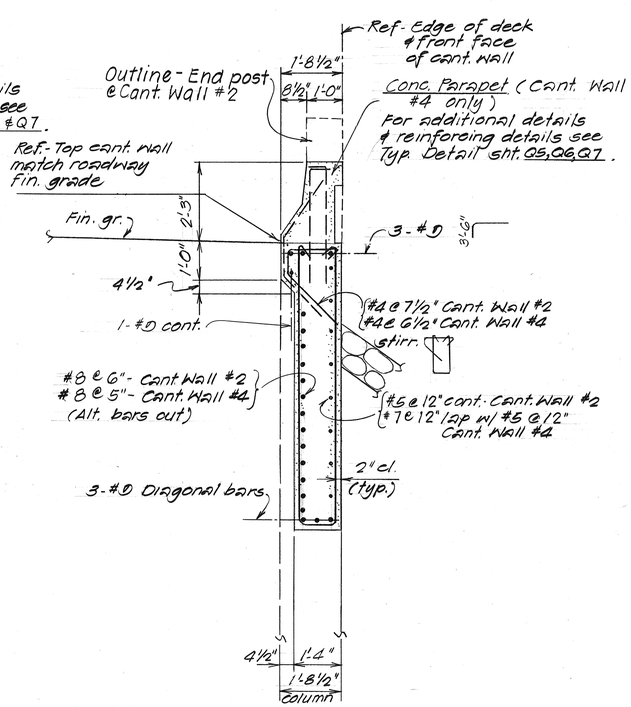

SECTION B (S11 S11)

Scale: ½" = 1'-0"

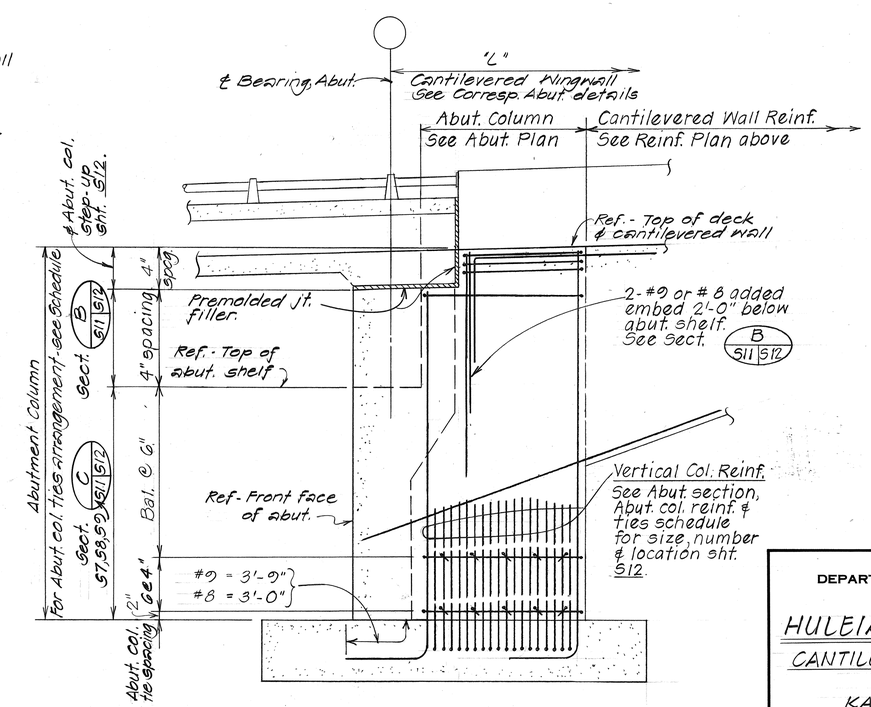

TYPICAL ELEVATION - ABUTMENT COLUMN

Not to Scale

ORIGINAL PLAN		DATE
	SURVEY PLOTTED BY	
	DRAWN BY	1/87
	TRACED BY H.E.	1/87
	DESIGNED BY D.C.O.	1/87
NOTE BOOK	QUANTITIES BY H.E. & L.M.A.	
No.	CHECKED BY D.C.O. & G.T.	

STATE OF HAWAII
DEPARTMENT OF TRANSPORTATION
HIGHWAYS DIVISION

HULEIA STREAM BRIDGE

CANTILEVERED WALL DETAILS

KAUMUALII HWY.
PROJ. NO. BR-F-050-1(7)

Scale: As Noted Date: Aug. 1987

SHEET No. S11 OF 22 SHEETS

FED. ROAD DIST. NO.	STATE	FED. AID PROJ. NO.	FISCAL YEAR	SHEET NO.	TOTAL SHEETS
HAWAII	HAW.	BR-F-050-1(7)	1988	36	75

ABUTMENT COLUMN REINFORCING & TIES SCHEDULE

ABUTMENT COLUMN "A" OR "C"

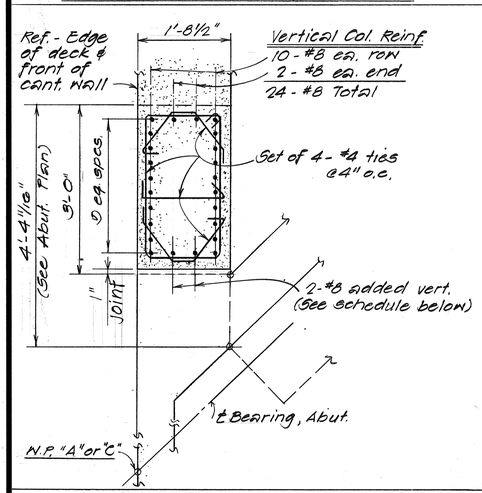

ABUTMENT COLUMN "B"

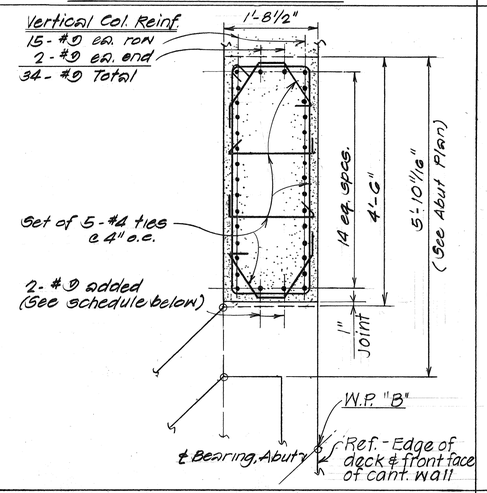

ABUTMENT COLUMN "D"

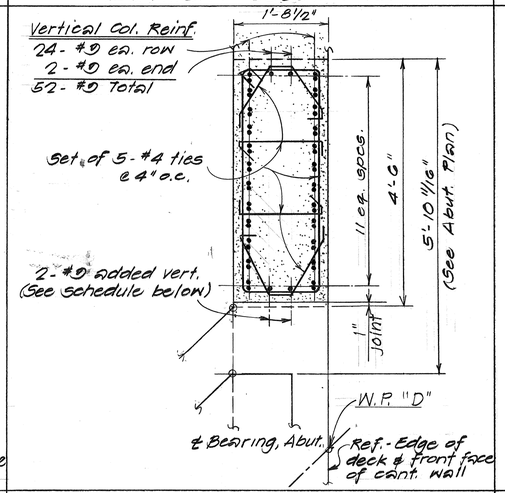

AT ABUTMENT COLUMN STEP-UP

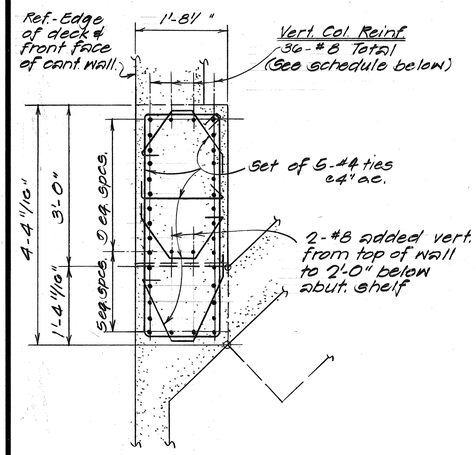

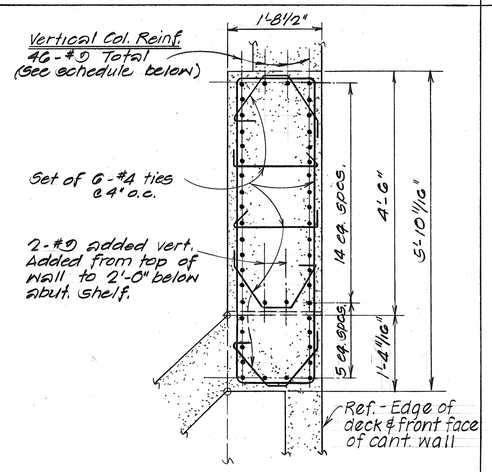

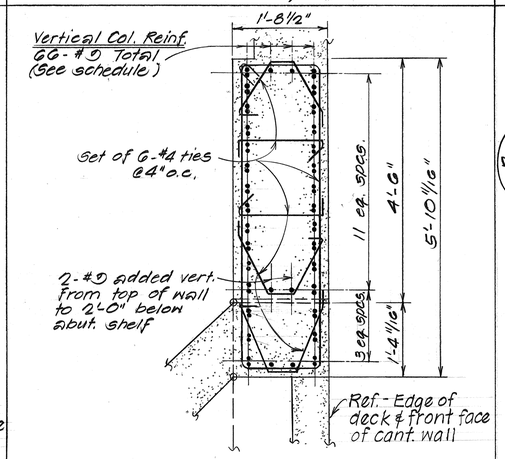

AT SECTION B 511/512

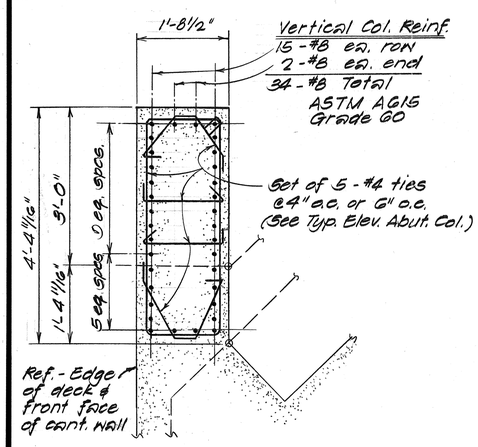

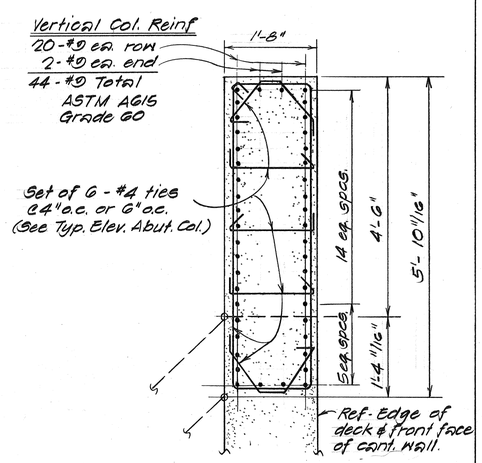

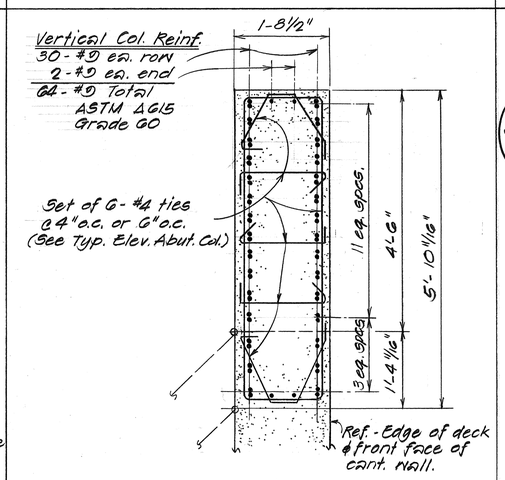

AT SECTION C 511/512

Reference Note:

1. Refer to sht. 57, 58 for Abutment Plan.
2. Refer to sht. 511 for Typical Abutment Column Elevation & Cantilevered Wall.
3. Alternate hook ends of column ties @ each layer.

ORIGINAL PLAN		DATE
	SURVEY PLOTTED BY	
	DRAWN BY H.E.	1/87
	TRACED BY H.E.	1/87
NOTE BOOK	DESIGNED BY D.C.O.	1/87
	QUANTITIES BY H.E. & D.C.O.	1/87
No.	CHECKED BY D.C.O. & G.T.	1/87

STATE OF HAWAII
DEPARTMENT OF TRANSPORTATION
HIGHWAYS DIVISION

HULEIA STREAM BRIDGE

ABUTMENT COLUMN REINFORCEMENT & TIES SCHEDULE

KAUMUALII HWY.
PROJ. NO. BR-F-050-1(7)

Scale: 3/4" = 1'-0" Date: Aug. 1987

SHEET No. 512 OF 22 SHEETS

FED. ROAD DIST. NO.	STATE	FED. AID PROJ. NO.	FISCAL YEAR	SHEET NO.	TOTAL SHEETS
HAWAII	HAW.	BR-F-050-1(7)	1988	37	75

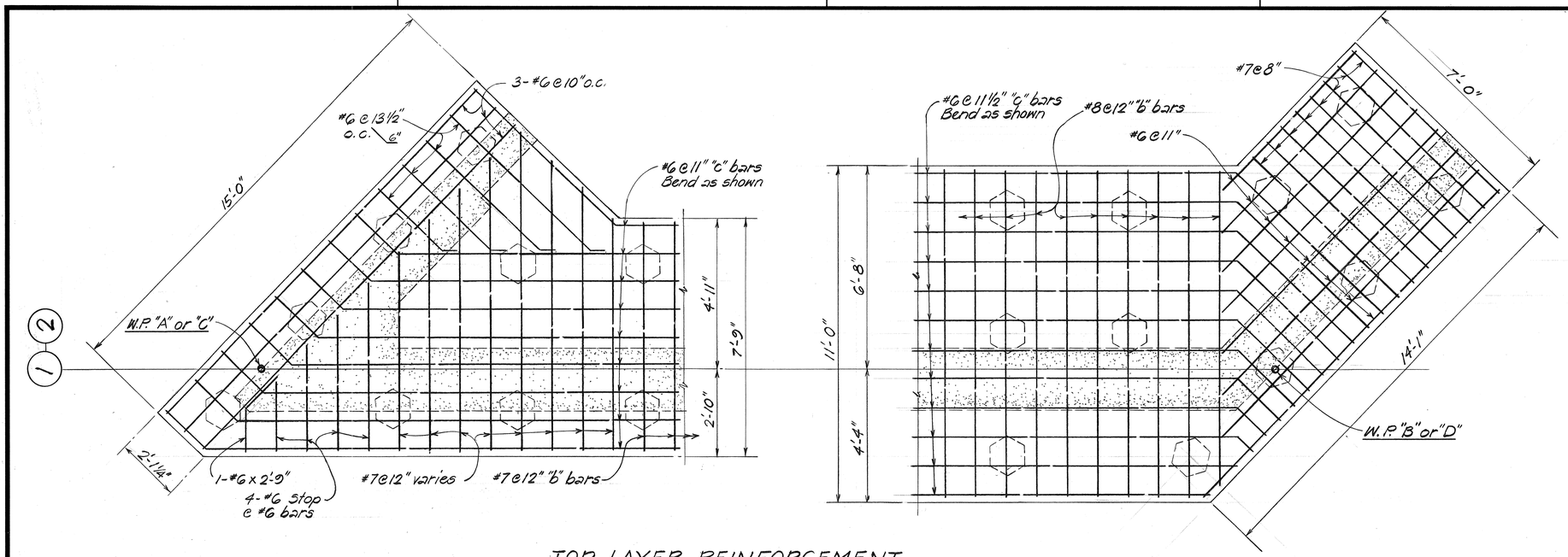

TOP LAYER REINFORCEMENT

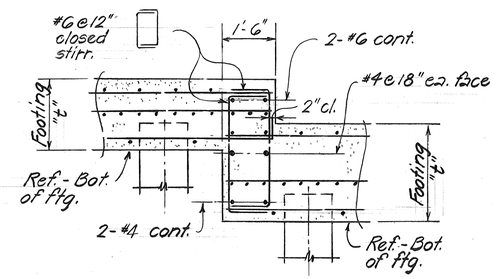

TYPICAL ABUT. FOOTING STEP-UP DETAIL (A) S7 | S13

Scale: ½" = 1'-0" SB

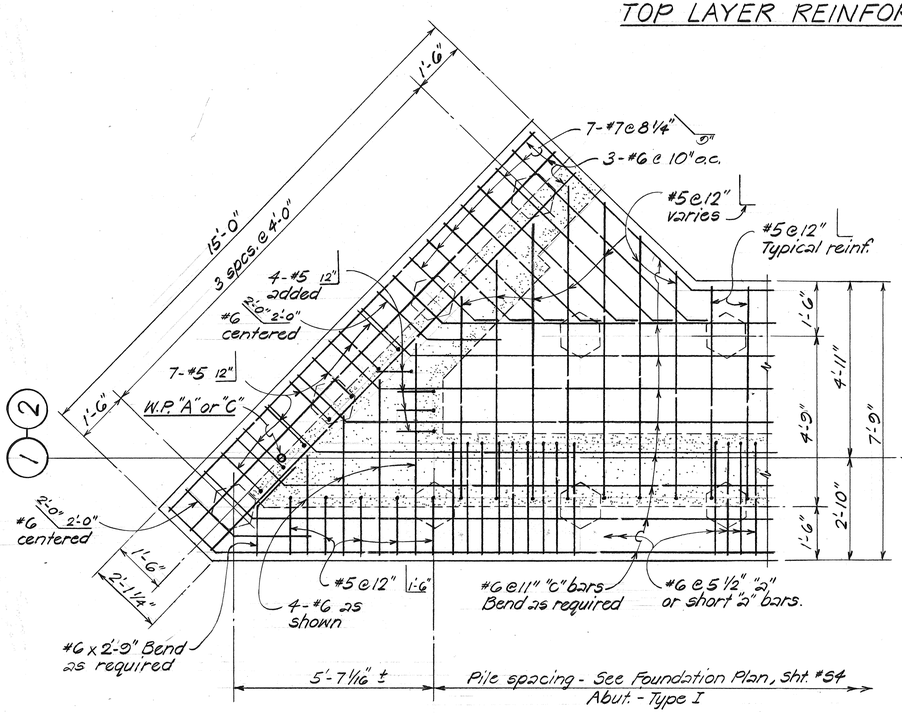

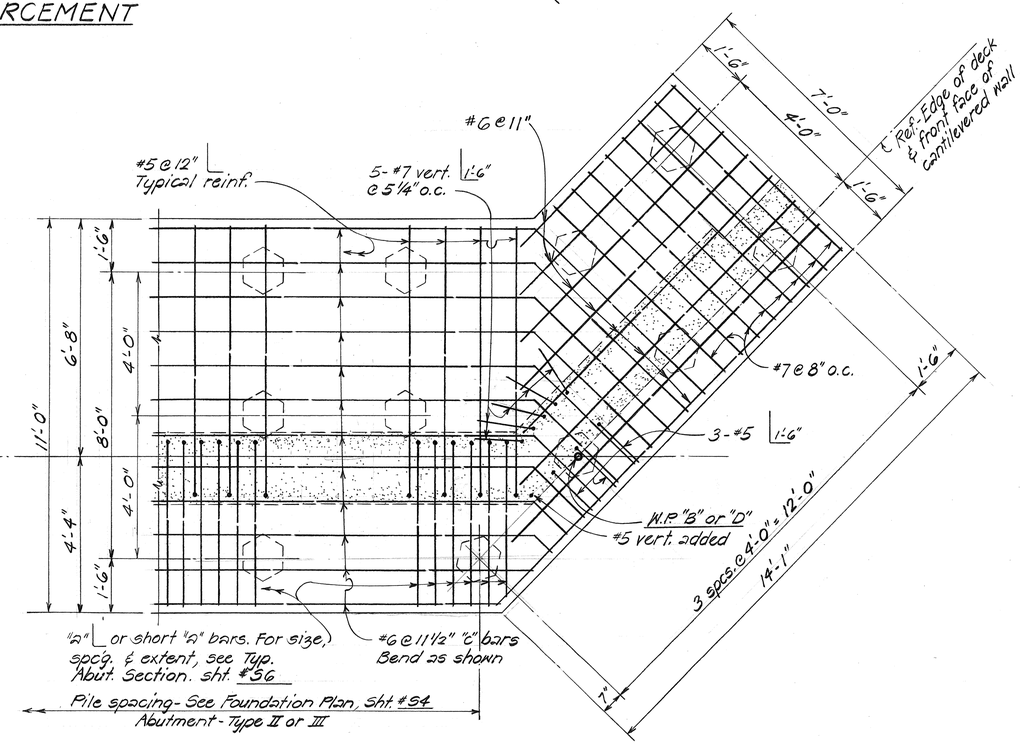

BOTTOM LAYER REINFORCEMENT

PART PLAN - ABUTMENT (1) & (2) FOOTING REINFORCEMENT

Scale: ½" = 1'-0"

STATE OF HAWAII
DEPARTMENT OF TRANSPORTATION
HIGHWAYS DIVISION

HULEIA STREAM BRIDGE

ABUTMENT FOOTING REINFORCEMENT & STEP - UP DETAIL

KAUMUALII HWY.
PROJ. NO. BR-F-050-1(7)

Scale: As Noted Date: Aug. 1987

SHEET No. S13 OF 22 SHEETS

ORIGINAL PLAN | SURVEY PLOTTED BY | DRAWN BY | TRACED BY | DESIGNED BY | QUANTITIES BY | CHECKED BY | DATE | NOTE BOOK | No.

FED. ROAD DIST. NO.	STATE	FED. AID PROJ. NO.	FISCAL YEAR	SHEET NO.	TOTAL SHEETS
HAWAII	HAW.	BR-F-050-1(7)	1988	310	75

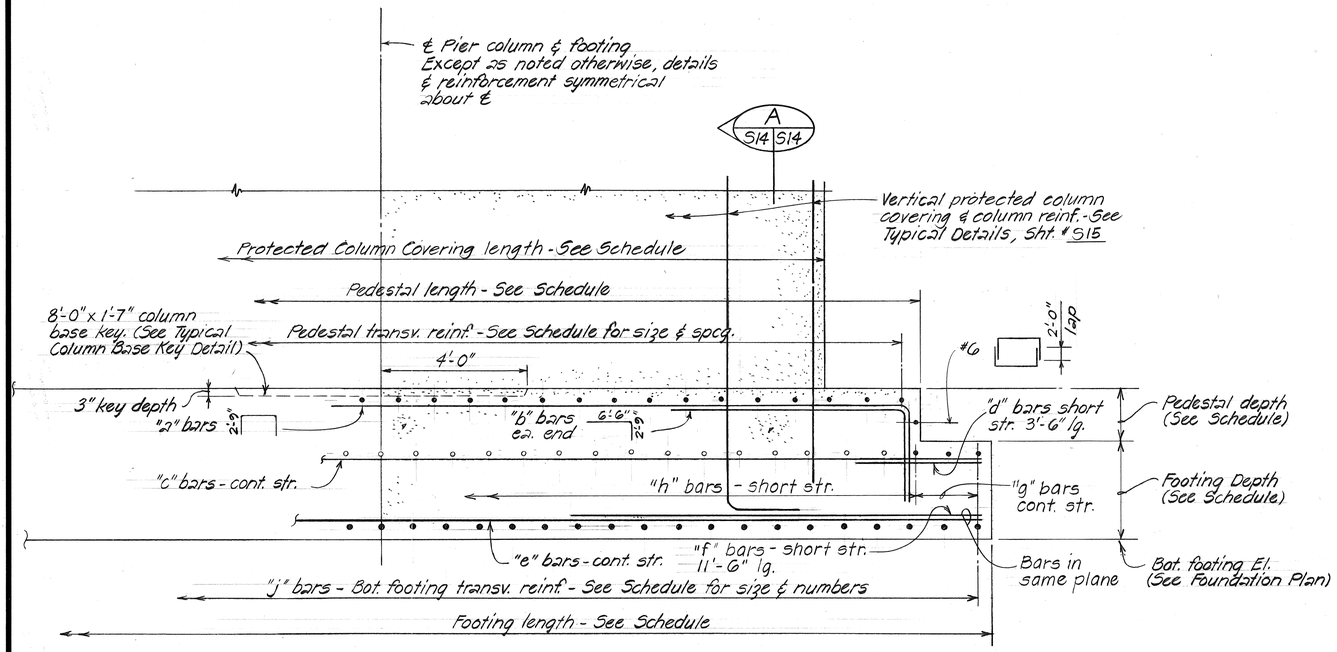

ELEVATION - PIER FOOTING

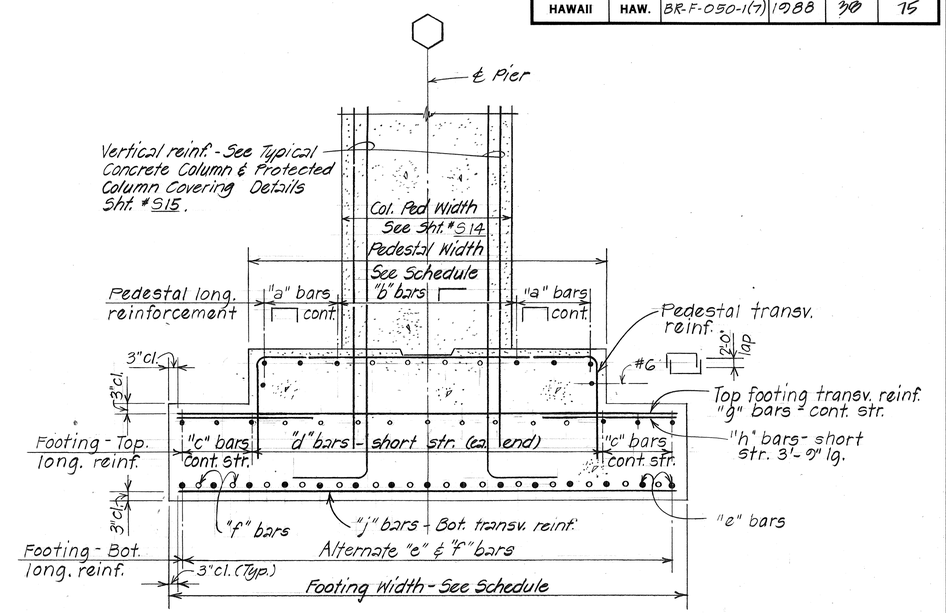

SECTION A S14 S14

TYPICAL PIER FOOTING DETAIL

Scale: 1/2" = 1'-0"

REFERENCE NOTES

1. Refer to Sht. # S15 for pier column dimensions and reinf. details.
2. All footing reinf. shall be ASTM A615 Grade 60.
3. All footing and pedestal concrete shall be 5000 psi.

PIER FOOTING - DIMENSION & REINFORCING SCHEDULE

ITEM / PIER	DIMENSION						REINFORCING STEEL								
	PEDESTAL			FOOTING			PEDESTAL			FOOTING					
							LONG. REINF.		TRANS. REINF.	TOP LONG. REINF.	BOT. LONG. REINF.	TOP TRANSV. REINF.		BOT. TRANSV. REINF.	
	LENGTH	WIDTH	DEPTH	LENGTH	WIDTH	DEPTH	"a" bars ea. side	"b" bars	2'-9"	"c" bars ea. side	"d" bars short str.	"e" bars cont. str.	"f" bars short str.	"g" bars cont. str.	"h" bars short str.	"j" bars cont. str.
1 2 3	30'-0"	10'-0"	1'-6"	34'-0"	14'-6"	2'-0"	#6 @ 12"	#6 @ 12"	#6 @ 12"	3-#6 @ 12"	#6 @ 12"	15-#11	14-#11	#6 @ 12"	#6 @ 12"	37-#11

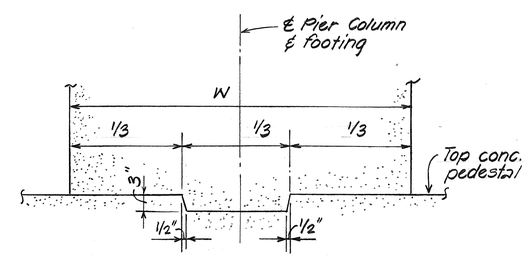

TYPICAL COLUMN BASE KEY DETAIL

Not to Scale

ORIGINAL PLAN		DATE
	SURVEY PLOTTED BY	
	DRAWN BY T.K.M.	1/87
NOTE BOOK	TRACED BY	1/87
	DESIGNED BY S.A.	1/87
No.	QUANTITIES BY T.K.M.	1/87
	CHECKED BY D.C.O. & G.T.	1/87

STATE OF HAWAII
DEPARTMENT OF TRANSPORTATION
HIGHWAYS DIVISION

HULEIA STREAM BRIDGE

PIER 1, 2 & 3 FOOTING DETAILS & SCHEDULE

KAUMUALII HWY.
PROJ. NO. BR-F-050-1(7)

Scale: As Noted Date: Aug. 1987

SHEET No. 514 OF 22 SHEETS

FED. ROAD DIST. NO.	STATE	FED. AID PROJ. NO.	FISCAL YEAR	SHEET NO.	TOTAL SHEETS
HAWAII	HAW.	BR-F-050-1(7)	1988	39	75

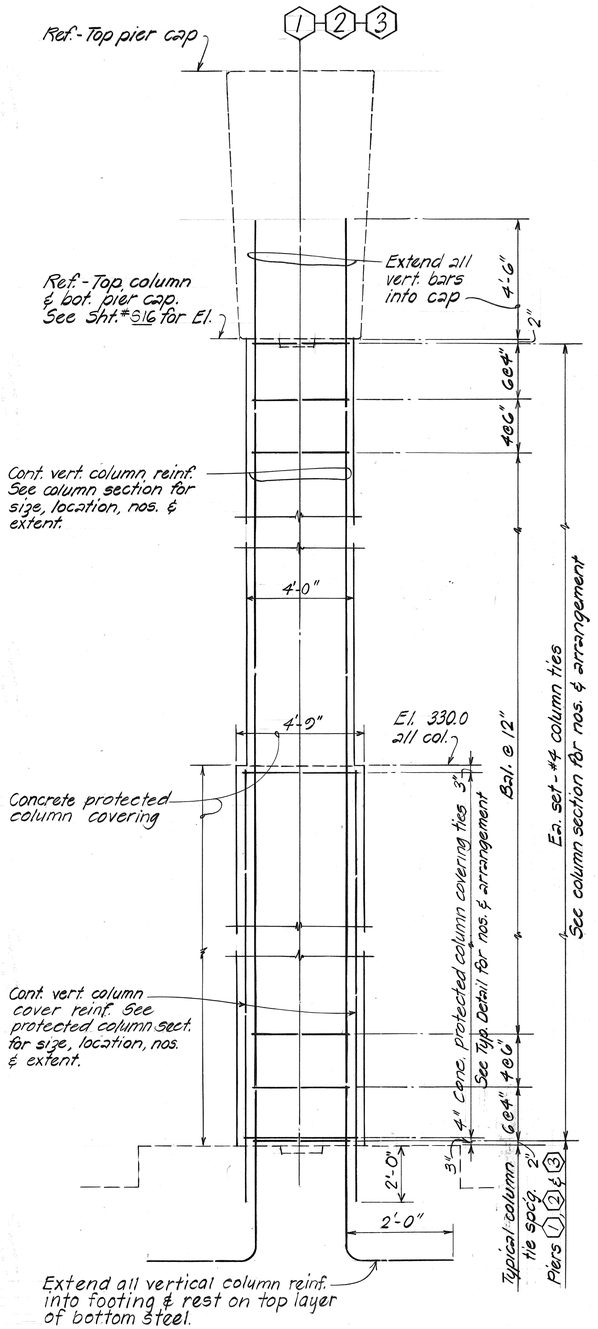

TYPICAL COLUMN DETAIL

Scale: 3/8" = 1'-0"

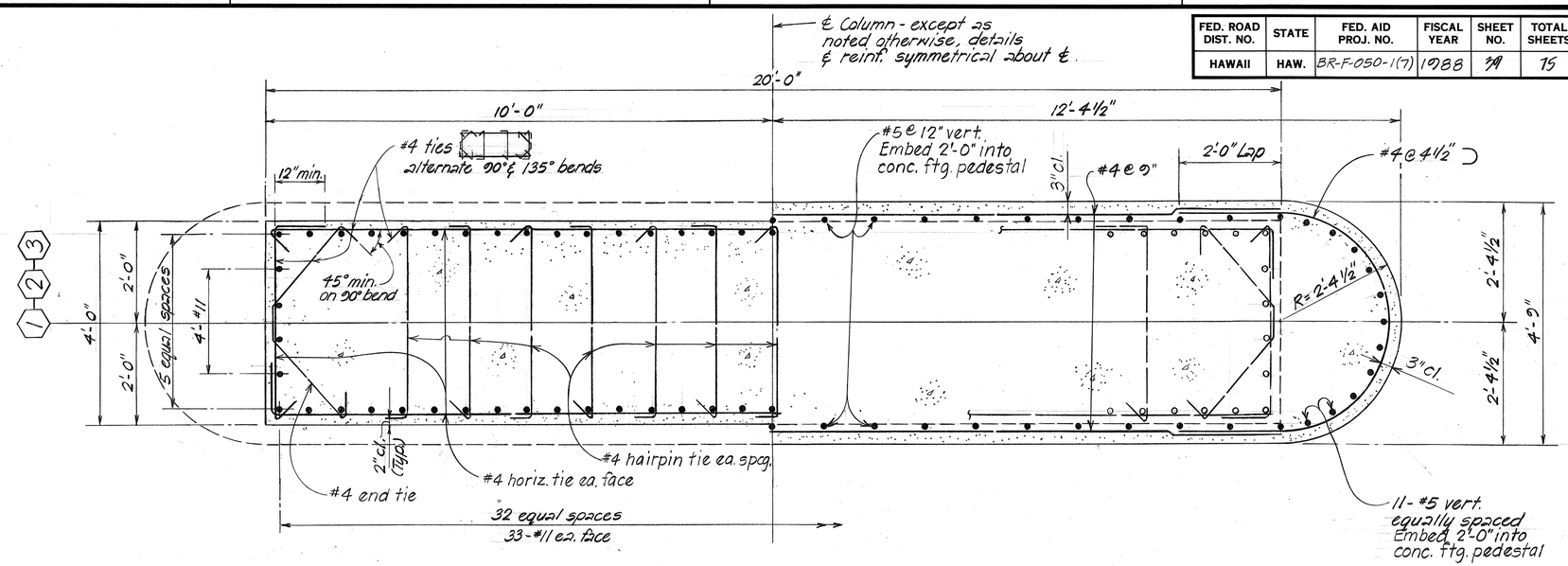

HALF COLUMN SECTION

HALF CONCRETE PROTECTED COLUMN COVERING SECTION

TYPICAL CONCRETE PIER COLUMN & CONCRETE PROTECTED COLUMN COVERING SECTION

Scale: 3/4" = 1'-0"

NOTE:

1. Refer to sht.#516 for pier cap dimensions & reinf. details.
2. All vertical column reinf. to be ASTM A615 Grade 60.

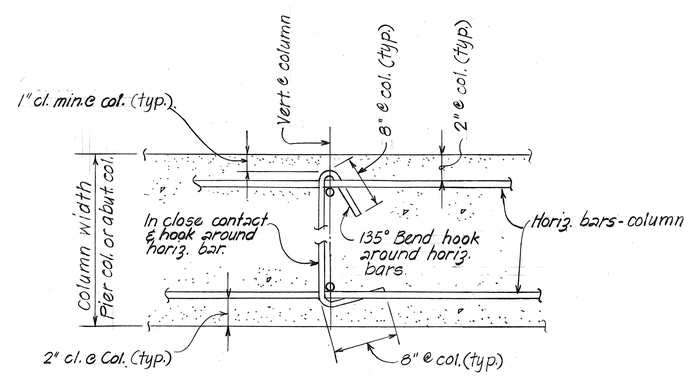

TYP. COLUMN TIE BAR DETAIL

Not to Scale

ORIGINAL PLAN		DATE
SURVEY PLOTTED BY		
DRAWN BY	K.M.	1/87
TRACED BY	K.M.	1/87
DESIGNED BY	S.A.	1/87
QUANTITIES BY	T.K.M.	1/87
CHECKED BY	D.C.O. & G.T.	1/87
NOTE BOOK No.		

STATE OF HAWAII
DEPARTMENT OF TRANSPORTATION
HIGHWAYS DIVISION

HULEIA STREAM BRIDGE

PIER COLUMN DETAILS

KAUMUALII HWY.
PROJ. NO. BR-F-050-1(7)

Scale: As Noted Date: Aug. 1987

SHEET No. 515 OF 22 SHEETS

FED. ROAD DIST. NO.	STATE	FED. AID PROJ. NO.	FISCAL YEAR	SHEET NO.	TOTAL SHEETS
HAWAII	HAW.	BR-F-050-1(7)	1988	40	75

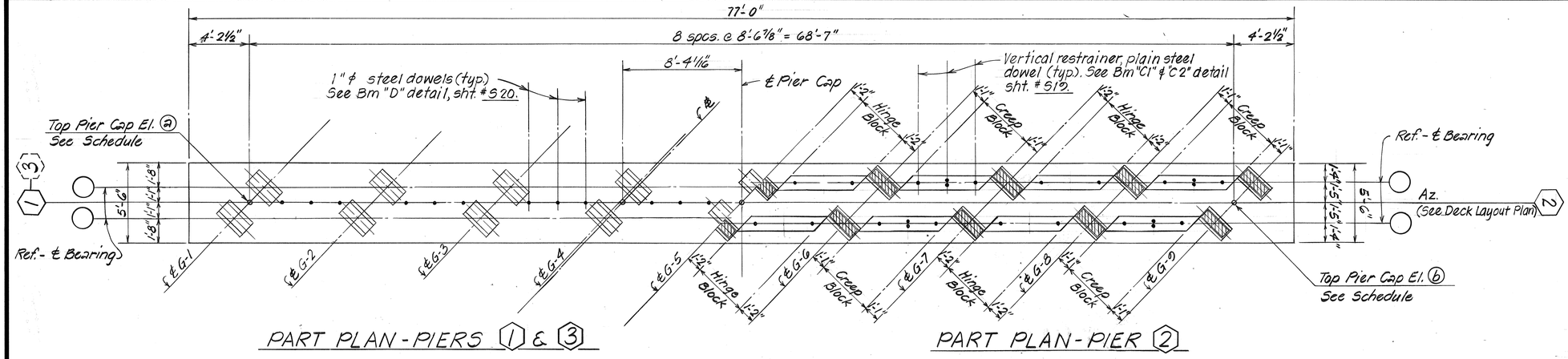

PART PLAN - PIERS 1 & 3

PART PLAN - PIER 2

TYPICAL PIER CAP PLAN

Scale: 1/4" = 1'-0"

TOP PIER CAP & TOP COLUMN ELEVATION SCHEDULE (AT ℄ PIER)				
PIER	El. ⓐ	El. ⓑ	El. ⓒ	El. ⓓ
1	362.88	362.57	352.79	352.66
2	362.83	362.91	352.85	352.89
3	363.89	364.35	354.03	354.21

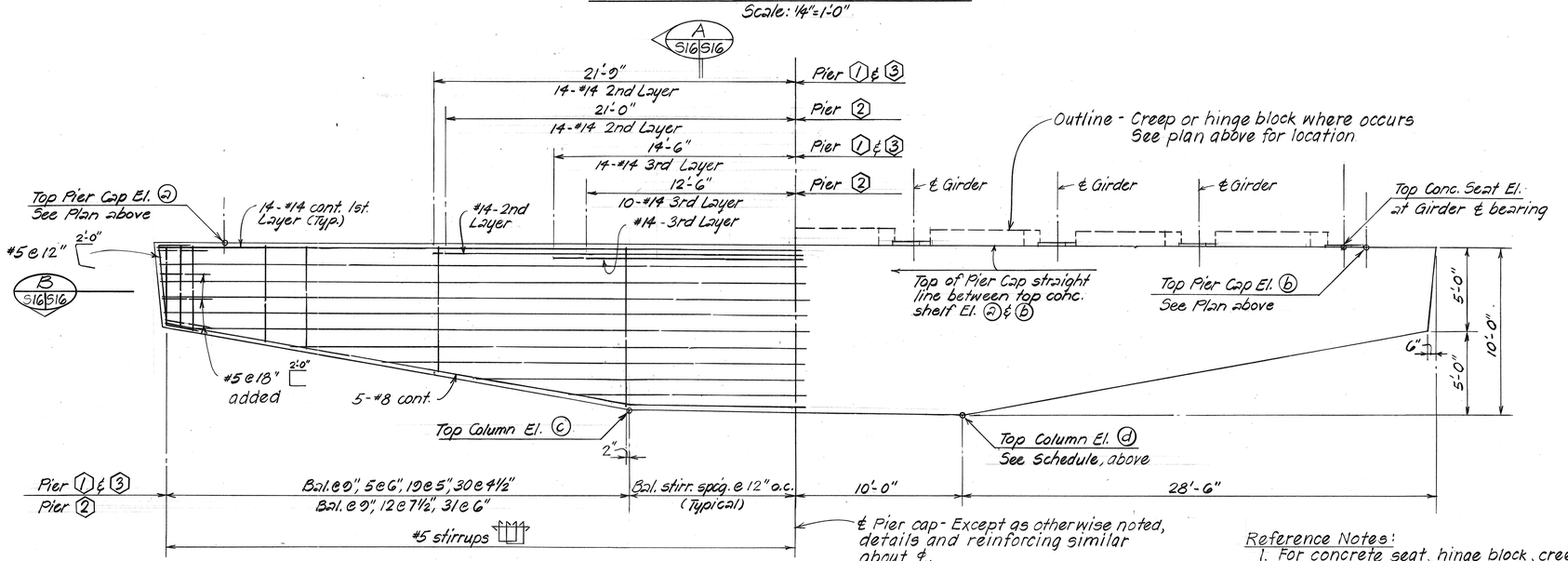

PIER REINFORCEMENT

PIER DIMENSION

TYPICAL PIER CAP ELEVATION

Scale: 1/4" = 1'-0"

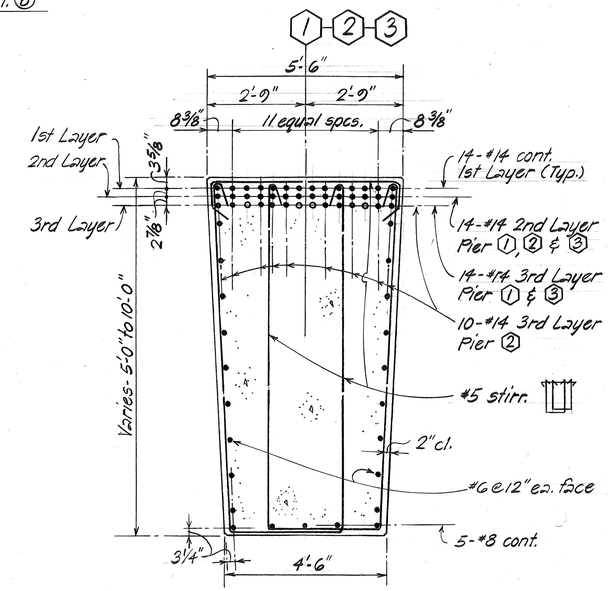

NOTE:
All #14 bars in pier cap to be ASTM A615 Grade 60.

TYPICAL SECTION A S16 S16

Scale: 1/2" = 1'-0"

Reference Notes:

1. For concrete seat, hinge block, creep block & elastomeric bearing pad details, see sht. #Q3.
2. For top concrete seat elev. @ girder ℄ bearing and elastomeric bearing pad size, see sht. #Q2.
3. For vertical restrainer & plain steel dowels, see Beam "C1", "C2" & "D" sht. #S19, #S20, #Q3.

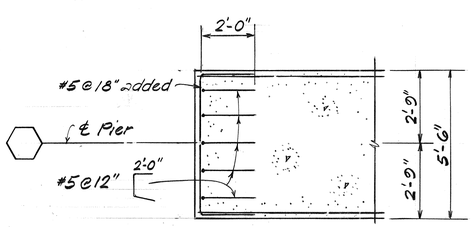

TYPICAL SECTION B S16 S16

Scale: 3/8" = 1'-0"

ORIGINAL PLAN		DATE
	SURVEY PLOTTED BY	
	DRAWN BY T.K.M.	1/87
	TRACED BY	1/87
NOTE BOOK	DESIGNED BY D.C.O.	1/87
	QUANTITIES BY T.K.M.	1/87
No.	CHECKED BY D.C.O. & G.T.	1/87

STATE OF HAWAII
DEPARTMENT OF TRANSPORTATION
HIGHWAYS DIVISION

HULEIA STREAM BRIDGE

PIER CAP DETAILS

KAUMUALII HWY.
PROJ. NO. BR-F-050-1(7)

Scale: As Noted Date: Aug. 1987

SHEET No. S16 OF 22 SHEETS

FED. ROAD DIST. NO.	STATE	FED. AID PROJ. NO.	FISCAL YEAR	SHEET NO.	TOTAL SHEETS
HAWAII	HAW.	BR-F-050-1(7)	1988	41	75

NOTE:

1. TSS- Denotes extent of Top Slab Strip (TSS-) between girders each bay. Refer to Typ. Deck Slab Sections & corresponding Bar Placement Diagram for size and numbers on sht. #S18.
2. Locate Beam "B" as indicated on Plan.
3. Girder dimension L = horizontal measurement between girder ℄ bearing at each end of the girder. The Contractor shall determine total length of girder.

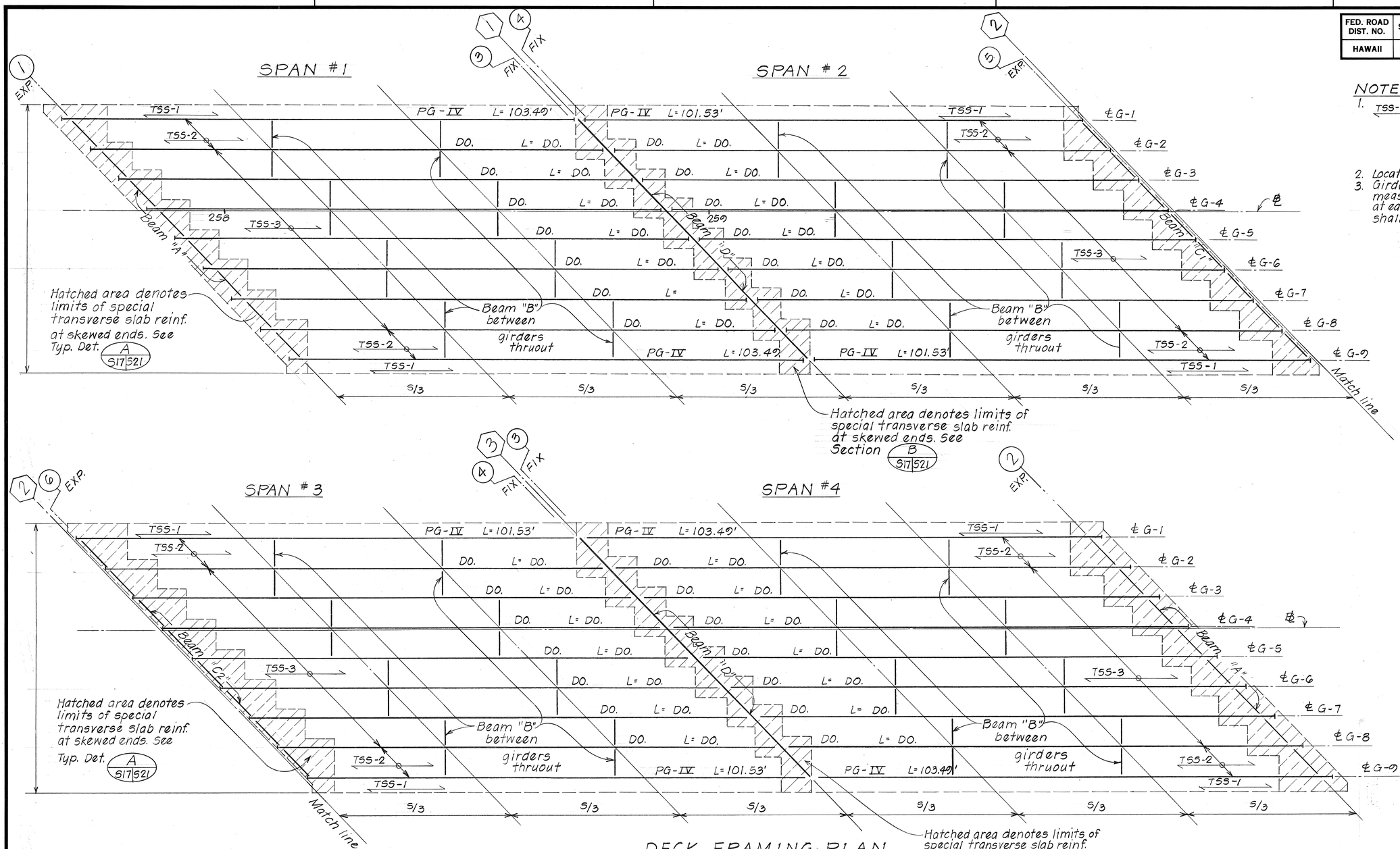

DECK FRAMING PLAN

Scale: 1" = 10'-0"

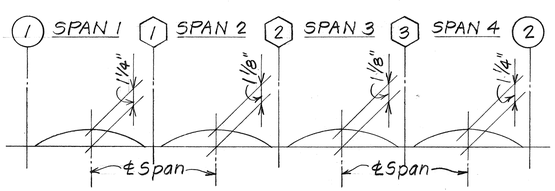

SLAB CAMBER DIAGRAM

STATE OF HAWAII
DEPARTMENT OF TRANSPORTATION
HIGHWAYS DIVISION

HULEIA STREAM BRIDGE

DECK FRAMING PLAN
SLAB CAMBER DIAGRAM
KAUMUALII HWY.
PROJ. NO. BR-F-050-1(7)

Scale: As Noted Date: Aug. 1987

SHEET No. S17 OF 22 SHEETS

ORIGINAL PLAN		DATE
	SURVEY PLOTTED BY	
	DRAWN BY L.M.A.	1/87
	TRACED BY	1/87
	DESIGNED BY D.C.O.	1/87
NOTE BOOK	QUANTITIES BY L.M.A. & H.E.	1/87
No.	CHECKED BY D.C.O. & G.H.	1/87

FED. ROAD DIST. NO.	STATE	FED. AID PROJ. NO.	FISCAL YEAR	SHEET NO.	TOTAL SHEETS
HAWAII	HAW.	BR-F-050-1(7)	1988	42	75

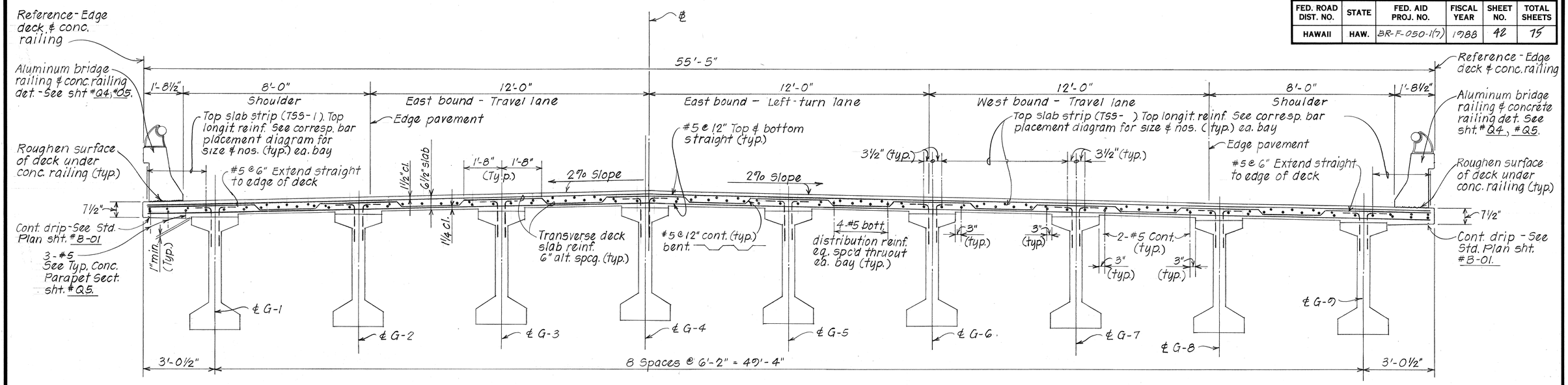

TYPICAL NORMAL DECK SECTION

Scale: ½" = 1'-0"

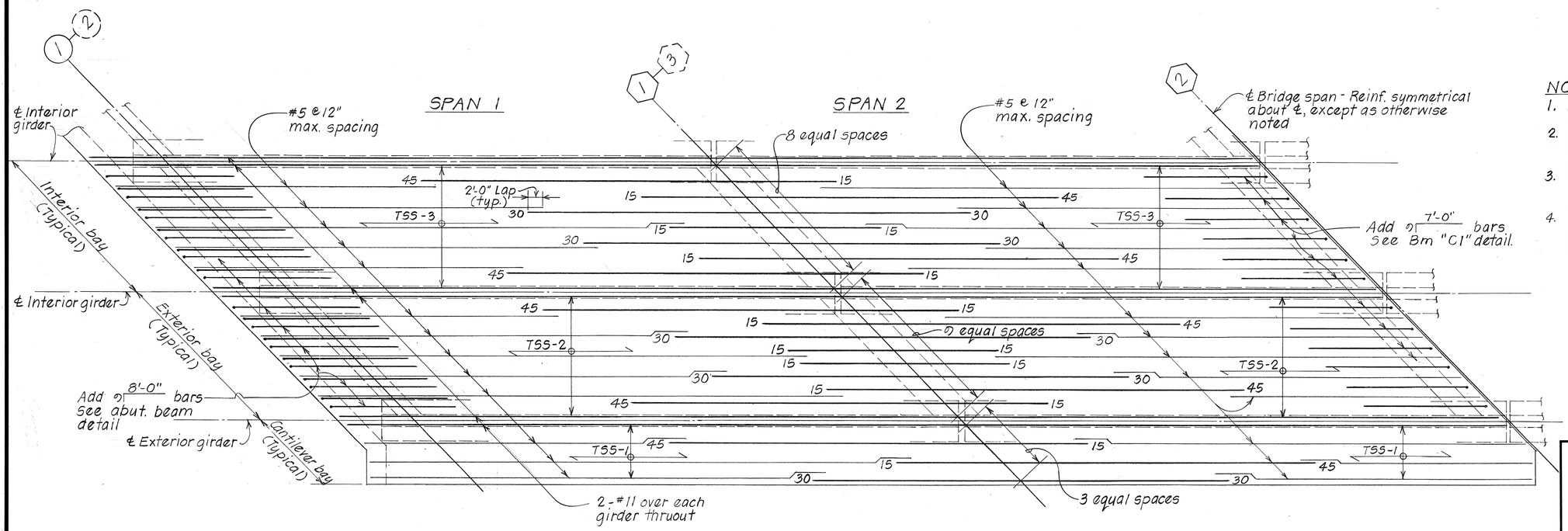

TYPICAL ARRANGEMENT OF REINFORCEMENT - TOP SLAB STRIP TSS-1 THRU TSS-3 INCLUSIVE

Scale - Horizontal: 1/8" = 1'-0"
Vertical: 3/8" = 1'-0"

3/32"

NOTE:

1. All reinforcement #11 except as noted otherwise.
2. Number at end of bars denotes dimension in feet from the adjacent pier line numeral.
3. For additional slab reinforcement see Normal Section & corresponding details.
4. All #5 @ 12" bars shall be extended and lapped 2'-0" min. with the adjacent #11 bars as shown.

		DATE
SURVEY PLOTTED BY		
DRAWN BY	J.A.	1/87
TRACED BY		
DESIGNED BY	D.C.O.	1/87
QUANTITIES BY	L.M.A. & H.J.C.	1/87
CHECKED BY	D.C.O. & S.T.	1/87

ORIGINAL PLAN

NOTE BOOK

No.

STATE OF HAWAII
DEPARTMENT OF TRANSPORTATION
HIGHWAYS DIVISION

HULEIA STREAM BRIDGE

NORMAL DECK SECTION

DECK REINF. DIAGRAM - TSS1 THRU TSS3

KAUMUALII HWY.

PROJ. NO. BR-F-050-1(7)

Scale: As Noted Date: Aug. 1987

SHEET No. 518 OF 22 SHEETS

FED. ROAD DIST. NO.	STATE	FED. AID PROJ. NO.	FISCAL YEAR	SHEET NO.	TOTAL SHEETS
HAWAII	HAW.	BR-F-050-1(7)	1988	43	75

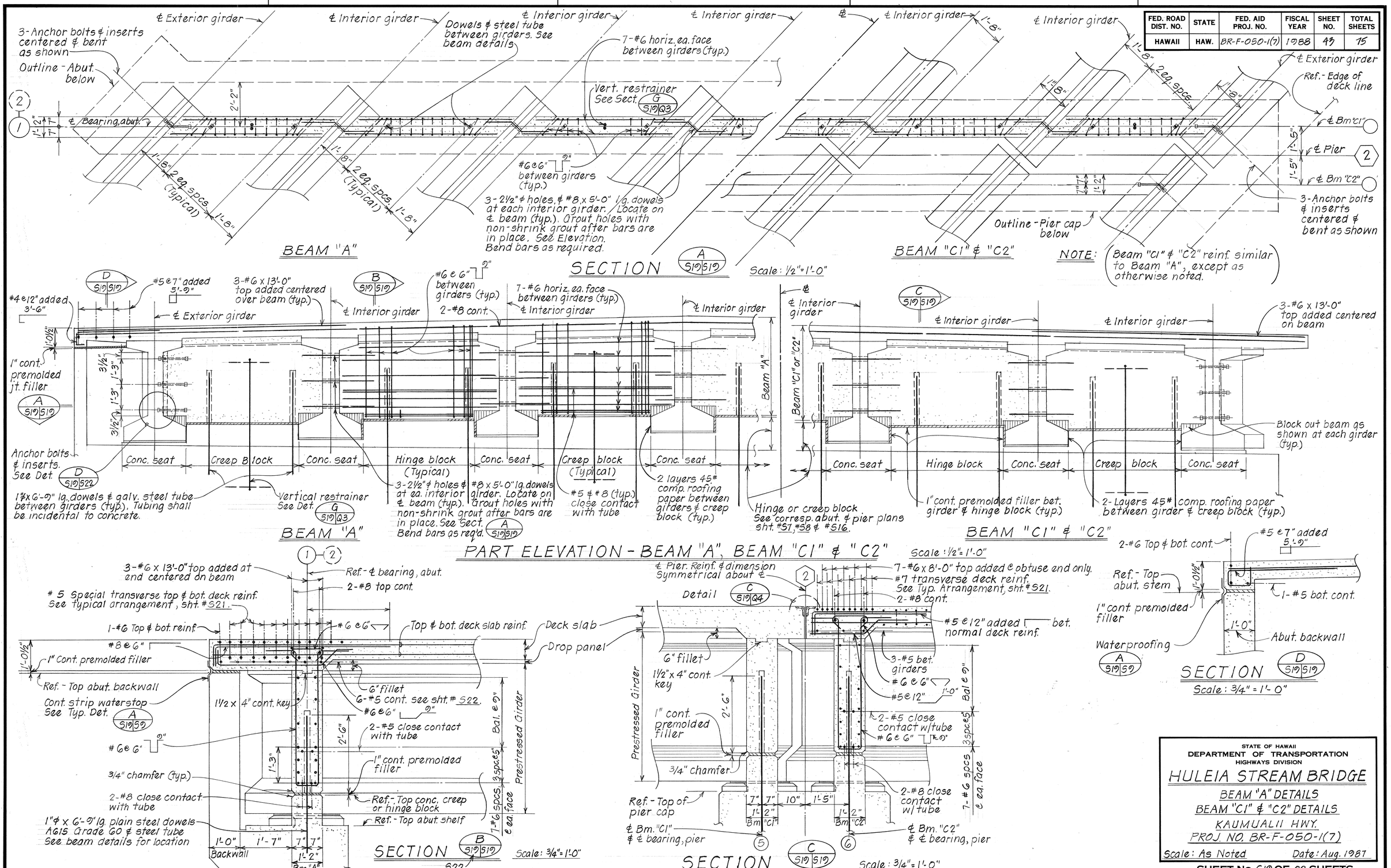

		DATE
SURVEY PLOTTED BY		
DRAWN BY	L.M.A.	1/87
TRACED BY	L.M.A.	1/87
DESIGNED BY	D.L.O.	1/87
QUANTITIES BY	L.M.A. & H.L.F.	1/87
CHECKED BY	D.L.O. & G.H.	

ORIGINAL PLAN

NOTE BOOK No.

STATE OF HAWAII
DEPARTMENT OF TRANSPORTATION
HIGHWAYS DIVISION

HULEIA STREAM BRIDGE

BEAM "A" DETAILS
BEAM "C1" & "C2" DETAILS

KAUMUALII HWY.
PROJ. NO. BR-F-050-1(7)

Scale: As Noted — Date: Aug. 1987

SHEET No. S19 OF 22 SHEETS

FED. ROAD DIST. NO.	STATE	FED. AID PROJ. NO.	FISCAL YEAR	SHEET NO.	TOTAL SHEETS
HAWAII	HAW.	BR-F-050-1(7)	1988	44	75

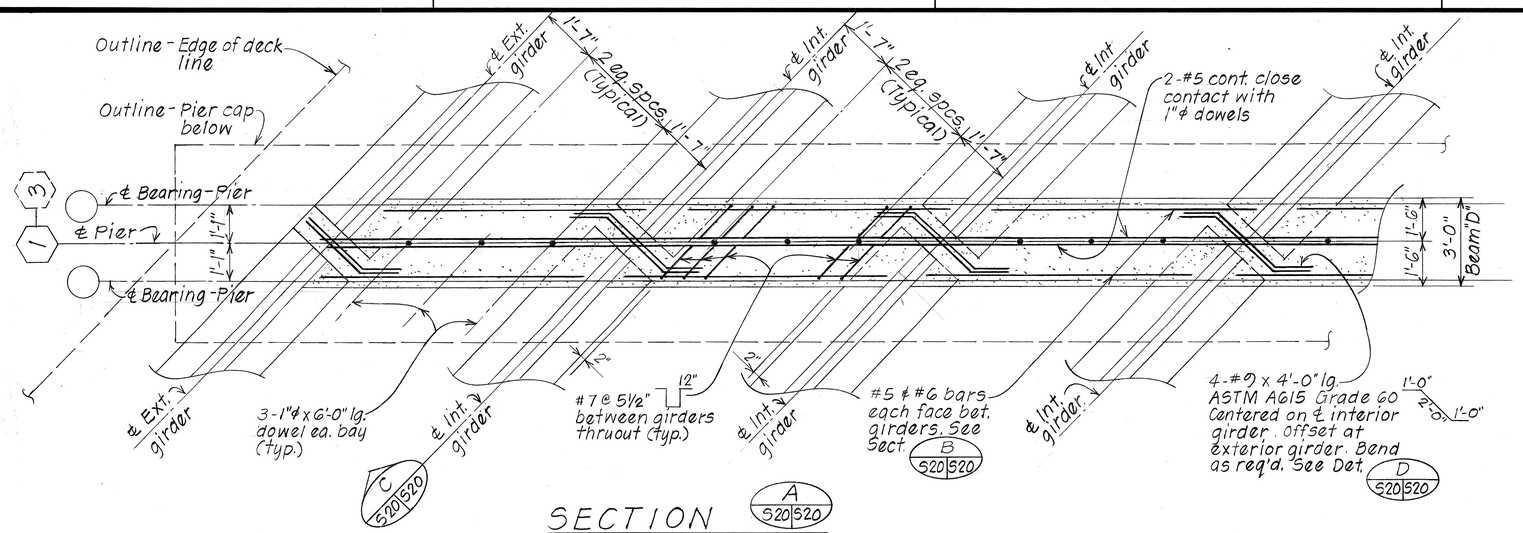

SECTION A S20/S20

Scale: 1/2" = 1'-0"

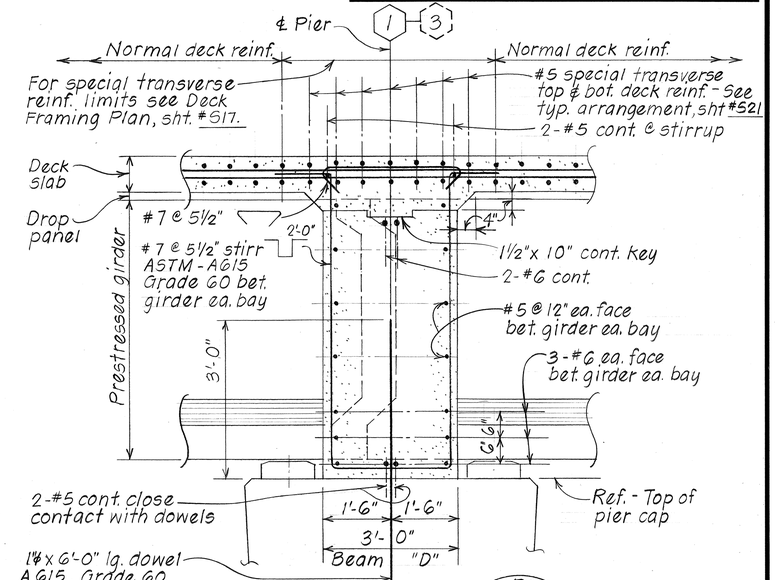

SECTION B S20/S20

Scale: 3/4" = 1'-0"

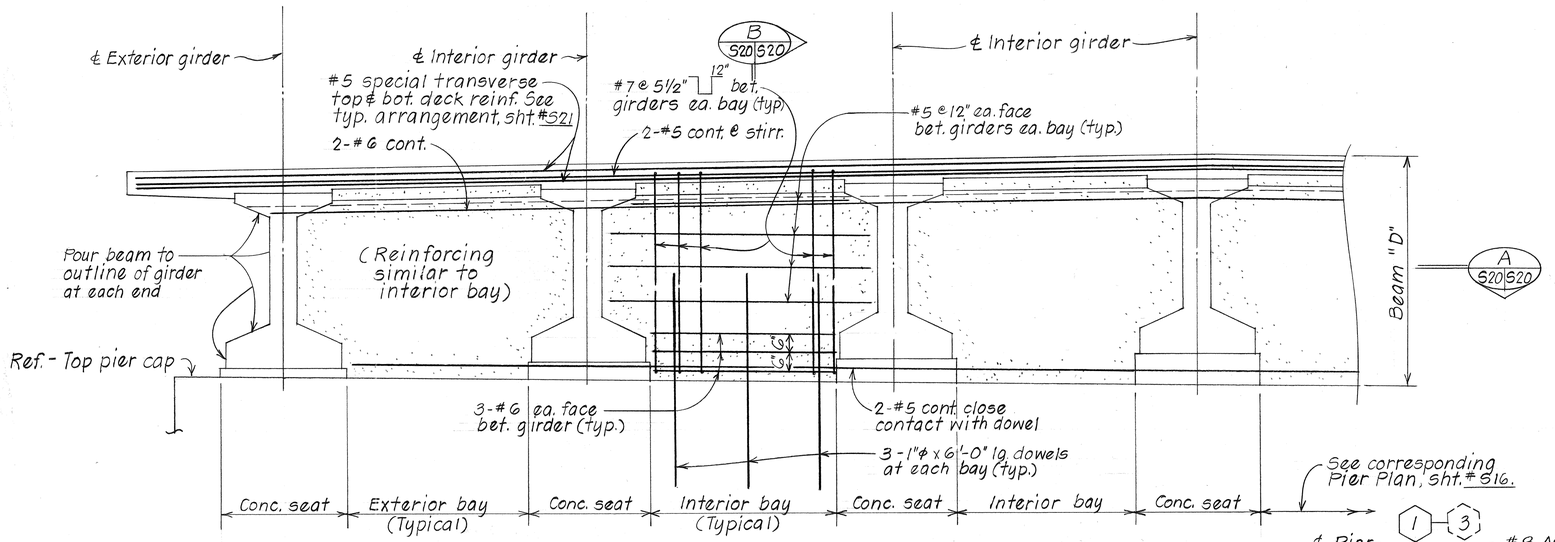

PART ELEVATION - BEAM "D"

Scale: 1/2" = 1'-0"

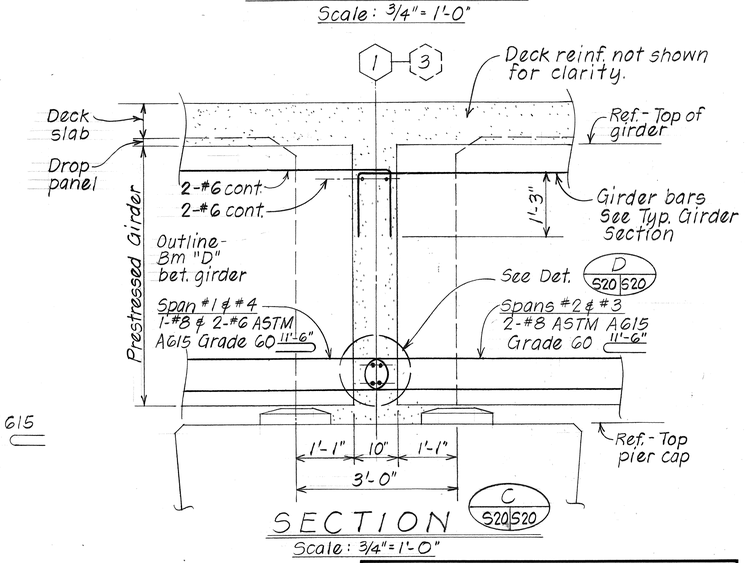

SECTION C S20/S20

Scale: 3/4" = 1'-0"

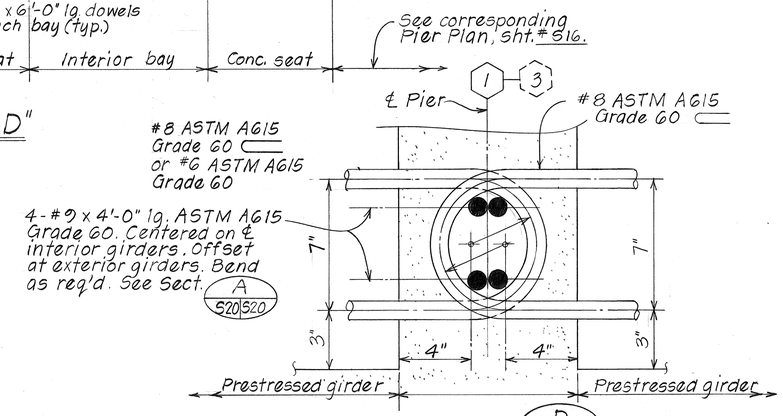

DETAIL D S20/S20

Scale: 3" = 1'-0"

ORIGINAL PLAN		DATE
	SURVEY PLOTTED BY	
	DRAWN BY L.M.A.	1/87
	TRACED BY L.M.A.	1/87
	DESIGNED BY D.C.O.	1/87
NOTE BOOK	QUANTITIES BY L.M.A. & H.F.	1/87
No.	CHECKED BY D.C.O. & G.T.	1/87

STATE OF HAWAII
DEPARTMENT OF TRANSPORTATION
HIGHWAYS DIVISION

HULEIA STREAM BRIDGE

BEAM "D" DETAILS

KAUMUALII HWY.
PROJ. NO. BR-F-050-1(7)

Scale: As Noted — Date: Aug. 1987

SHEET No. S20 OF 22 SHEETS

FED. ROAD DIST. NO.	STATE	FED. AID PROJ. NO.	FISCAL YEAR	SHEET NO.	TOTAL SHEETS
HAWAII	HAW.	BR-F-050-1(7)	1988	45	75

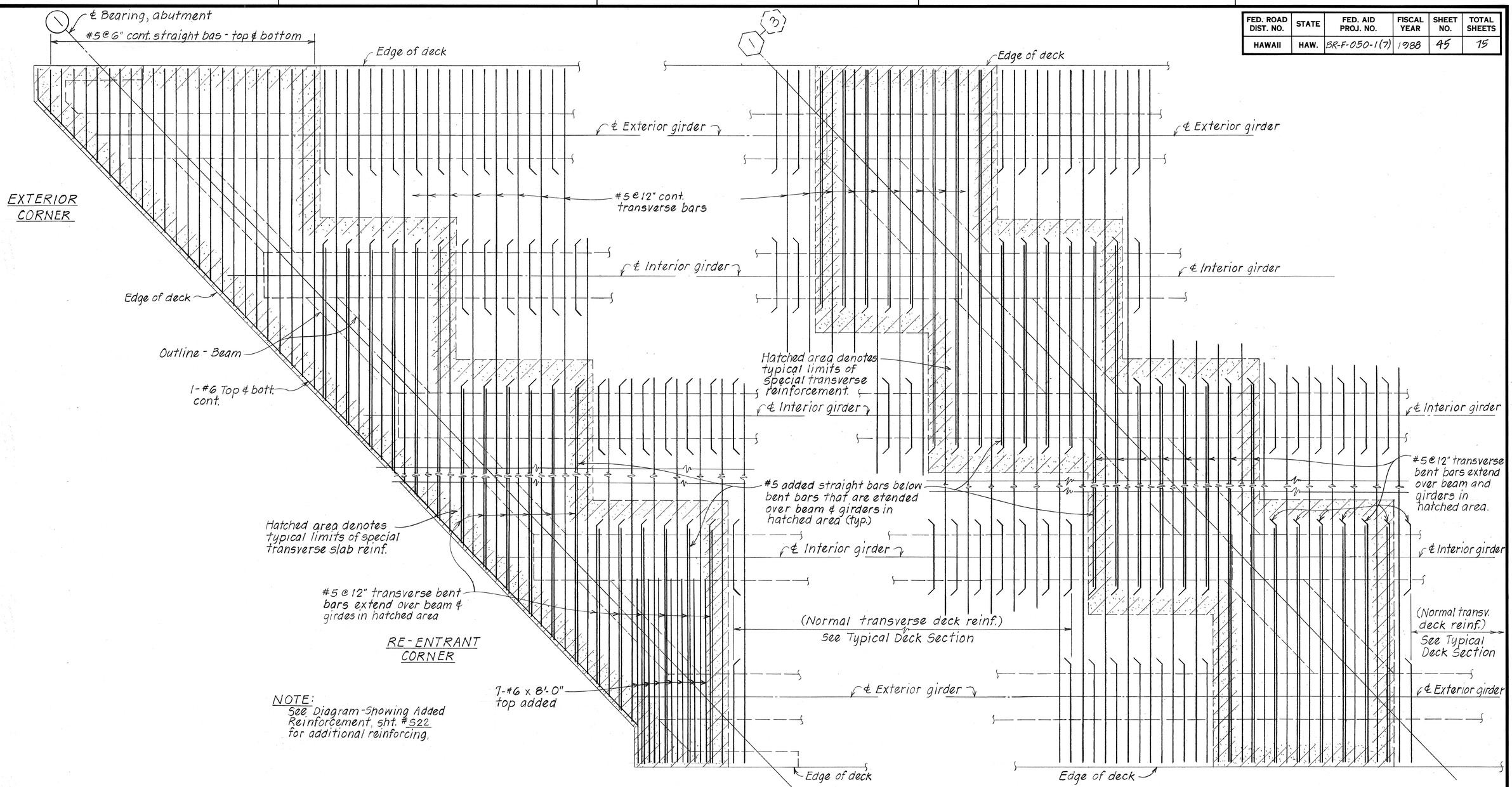

(DIAGRAM - SHOWING TRANSVERSE DECK REINFORCEMENT)

A S17 S21 ABUTMENT 1 - AS SHOWN

ABUTMENT 2 & PIER 2 - SIMILAR EXCEPT AS OTHERWISE NOTED

(DIAGRAM - SHOWING TRANSVERSE DECK REINFORCEMENT)

B S17 S21 AT PIER 1 & 3

PART PLAN - SPECIAL DECK REINFORCEMENT AT ABUTMENTS & PIERS

Scale: 1/2" = 1'-0"

ORIGINAL PLAN		DATE
	SURVEY PLOTTED BY	
	DRAWN BY L.M.A.	1/87
	TRACED BY	
	DESIGNED BY O.C.C.	1/87
NOTE BOOK	QUANTITIES BY L.M.A., E.H.F.	1/87
No.	CHECKED BY O.C.C. & G.T.	

STATE OF HAWAII
DEPARTMENT OF TRANSPORTATION
HIGHWAYS DIVISION

HULEIA STREAM BRIDGE

PART PLAN-SPECIAL DECK REINF.

KAUMUALII HWY.
PROJ. NO. BR-F-050-1(7)

Scale: As Noted Date: Aug. 1987

SHEET No. S21 OF 22 SHEETS

FED. ROAD DIST. NO.	STATE	FED. AID PROJ. NO.	FISCAL YEAR	SHEET NO.	TOTAL SHEETS
HAWAII	HAW.	BR-F-050-1(7)	1988	46	75

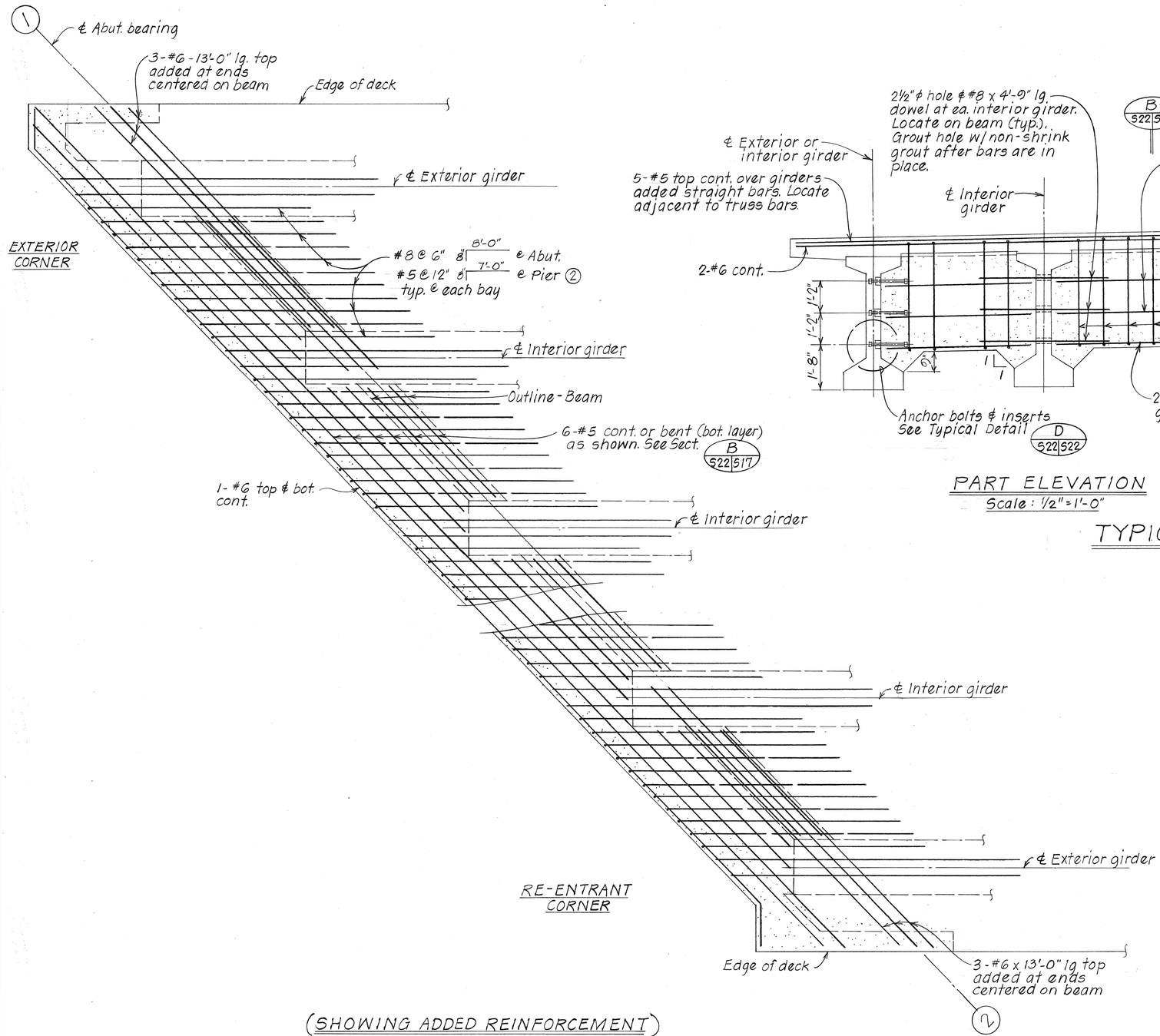

(SHOWING ADDED REINFORCEMENT)

PART PLAN - SPECIAL DECK REINFORCEMENT AT ABUTMENTS & PIER 2

Scale: 1/2" = 1'-0"

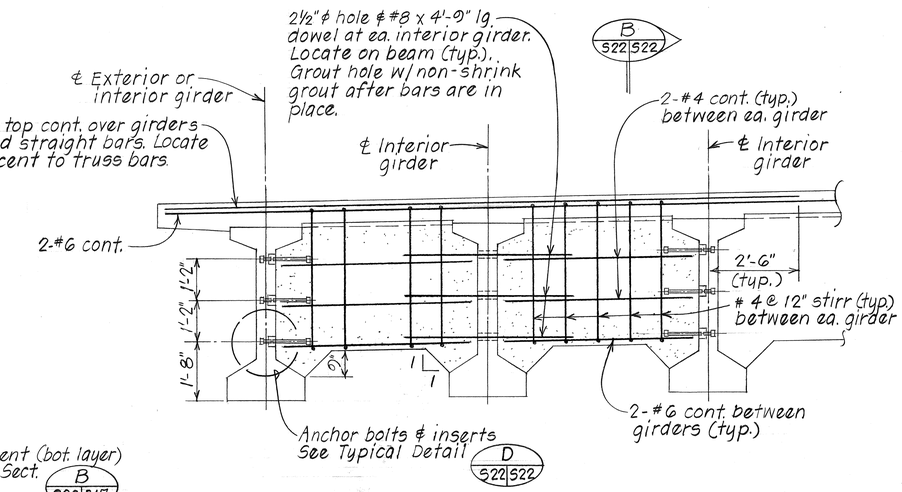

PART ELEVATION

Scale: 1/2" = 1'-0"

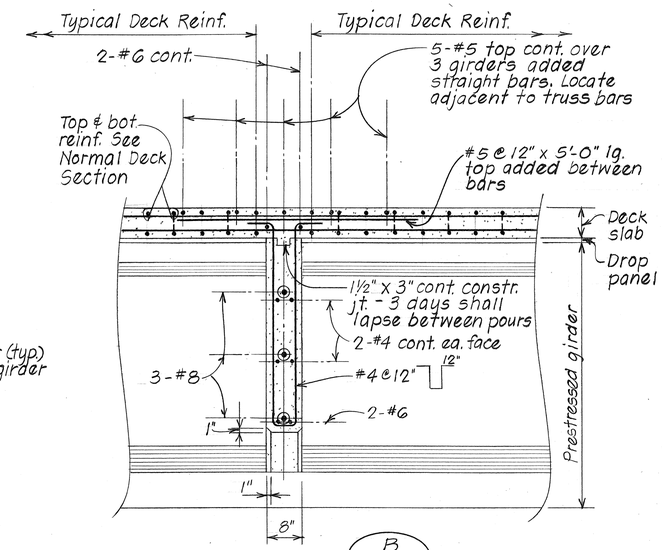

SECTION

Scale: 3/4" = 1'-0"

TYPICAL BEAM "B" DETAIL

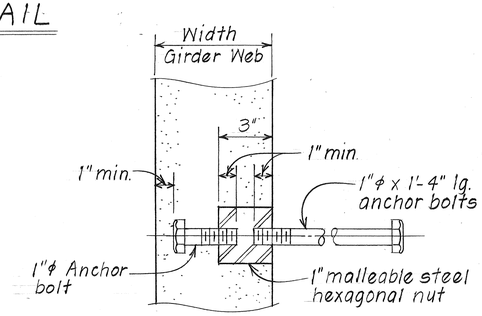

NOTE: Anchor bolts & inserts incidental to concrete & will not be paid for separately.

TYPICAL INSERT DETAIL D S22 S22

Scale: 3" = 1'-0"

S19

ORIGINAL PLAN		DATE
	SURVEY PLOTTED BY	
	DRAWN BY	J.M.A. 1/87
	TRACED BY	
	DESIGNED BY	D.C.O. 1/87
NOTE BOOK	QUANTITIES BY	L.M.A. & J.E. 1/87
No.	CHECKED BY	D.C.O. & G.T.

STATE OF HAWAII
DEPARTMENT OF TRANSPORTATION
HIGHWAYS DIVISION

HULEIA STREAM BRIDGE

PART PLAN-SPECIAL DECK REINF.
BEAM "B" DETAILS
KAUMUALII HWY.
PROJ. NO. BR-F-050-1(7)

Scale: As Noted Date: Aug. 1987

SHEET No. S22 OF 22 SHEETS

FED. ROAD DIST. NO.	STATE	FED. AID PROJ. NO.	FISCAL YEAR	SHEET NO.	TOTAL SHEETS
HAWAII	HAW.	BR-F-050-1(7)	1988	47	75

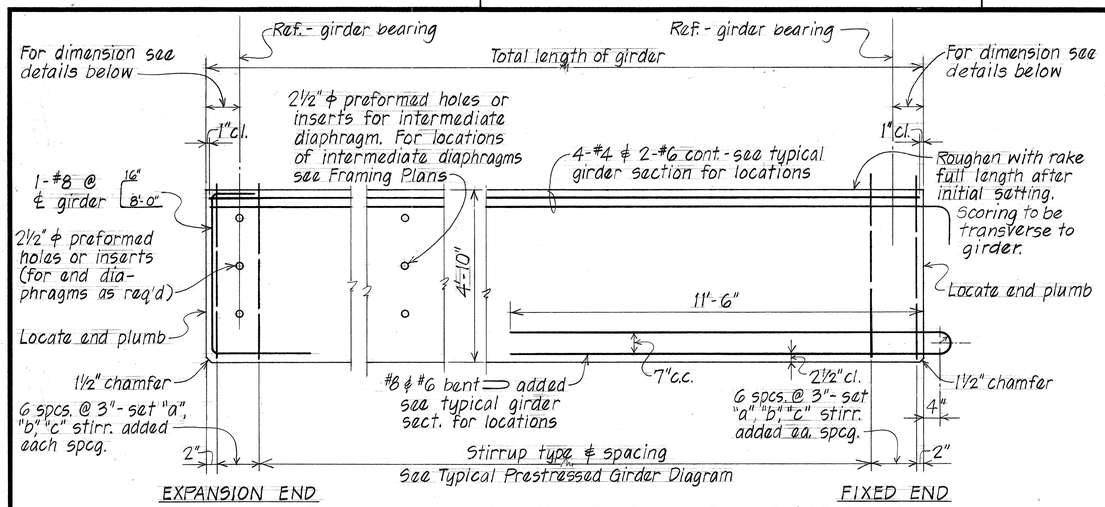

ELEVATION – TYPE PG-IV GIRDER END DETAILS

No Scale

BUNDLING OF PRESTRESSING REINFORCEMENT

1. Strands may be bundled in groups as shown.
2. The minimum distance "S" between groups or individual strands: 2" for ½" strands.
3. "S" is measured between centers of adjacent strands.

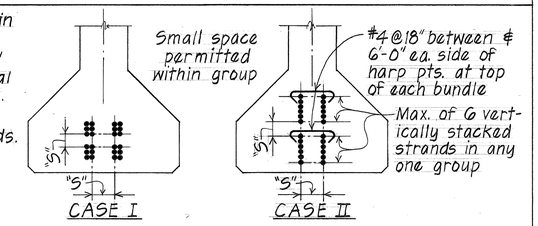

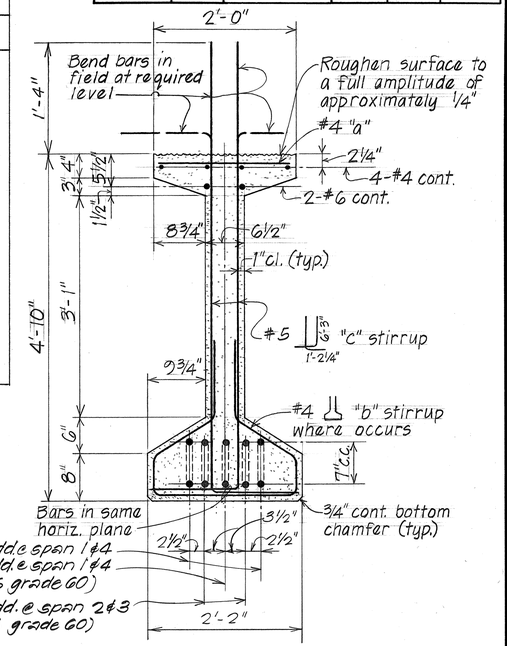

@ fixed end support only
- 2-#6 bent ⟹ add.e span 1 #4
- 1-#8 bent ⟹ add.e span 1 #4
  (ASTM A615 grade 60)
- 2-#8 bent ⟹ add. @ span 2 & 3
  (ASTM A615 grade 60)

TYPICAL PRESTRESSED CONCRETE GIRDER TYPE PG-IV

No Scale

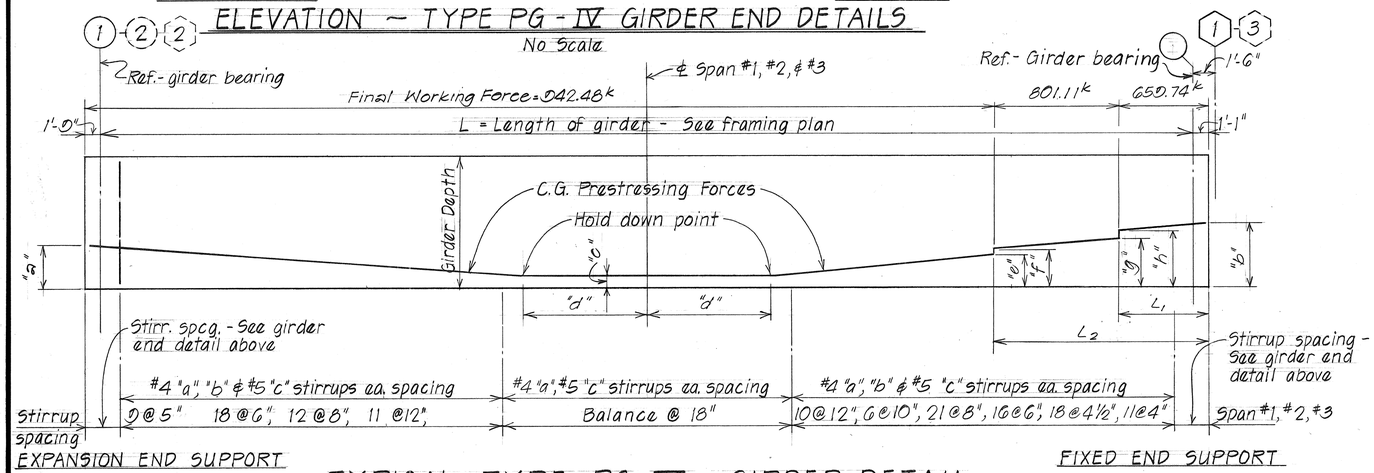

TYPICAL TYPE PG-IV GIRDER DETAIL

No Scale

GENERAL NOTES

1. All strand patterns shall be approved by the Engineer.
2. Forms must be removed and the beams inspected before strands are cut.
3. For additional holes and inserts in prestressed girders for beam connections refer to corresponding beam details. See sht. #519, #520 & #522.
4. For additional prestressed girder details not covered by these drawings refer to corresponding detail plans.
5. The calculated camber includes the effect of the intial prestress force and weight of the girder upon removal from the prestressing bed. Calculated camber values shown do not account for any camber growth of the girder. The actual camber at time of deck pour shall not exceed the calculad camber by more than 100%. Calculated midspan camber = 1 9/16 inches. Contractor shall submit record of cambers to the Engineer. This record shall include cambers at time of detensioning, delivery, and deck pour.

PRESTRESSED CONCRETE GIRDERS:

f'_c = 6,000 psi @ 28 days
f_{ci} = 4,350 psi @ transfer

PRESTRESSED STRANDS:

A. ½" ϕ 270 ksi, 7 wire stressed-relieved strands (ASTM A416)
Total losses other than friction = 45,000 psi

B. Allowable stresses in strands shall be in accordance with Design Specifications (See General Structure Notes)

GIRDER DIMENSION SCHEDULE

GIRDER TYPE	DIMENSION									
	"a"	"b"	"c"	"d"	"e"	"f"	"g"	"h"	L_1	L_2
TYPE PG-IV	18 15/16"	25 3/8"	5 7/16"	10'-3"	15 1/8"	17 3/8"	20"	23 1/8"	5'-0"	12'-0"

ORIGINAL PLAN	SURVEY PLOTTED BY	DATE
	DRAWN BY	"
	TRACED BY	"
NOTE BOOK	DESIGNED BY	"
	QUANTITIES BY	"
No.	CHECKED BY	"

STATE OF HAWAII
DEPARTMENT OF TRANSPORTATION
LAND TRANSPORTATION FACILITIES DIVISION

TYPICAL DETAILS

TYP. PRESTRESSED CONC. GIRDER DETAILS
TYPE PG-IV

KAUMUALII HIGHWAY
PROJ. NO. BR-F-050-1(7)

Scale: As Noted Date: Aug. 1987

SHEET No. Q1 OF 7 SHEETS

FED. ROAD DIST. NO.	STATE	FED. AID PROJ. NO.	FISCAL YEAR	SHEET NO.	TOTAL SHEETS
HAWAII	HAW.	BR-F-050-1(7)	1988	48	75

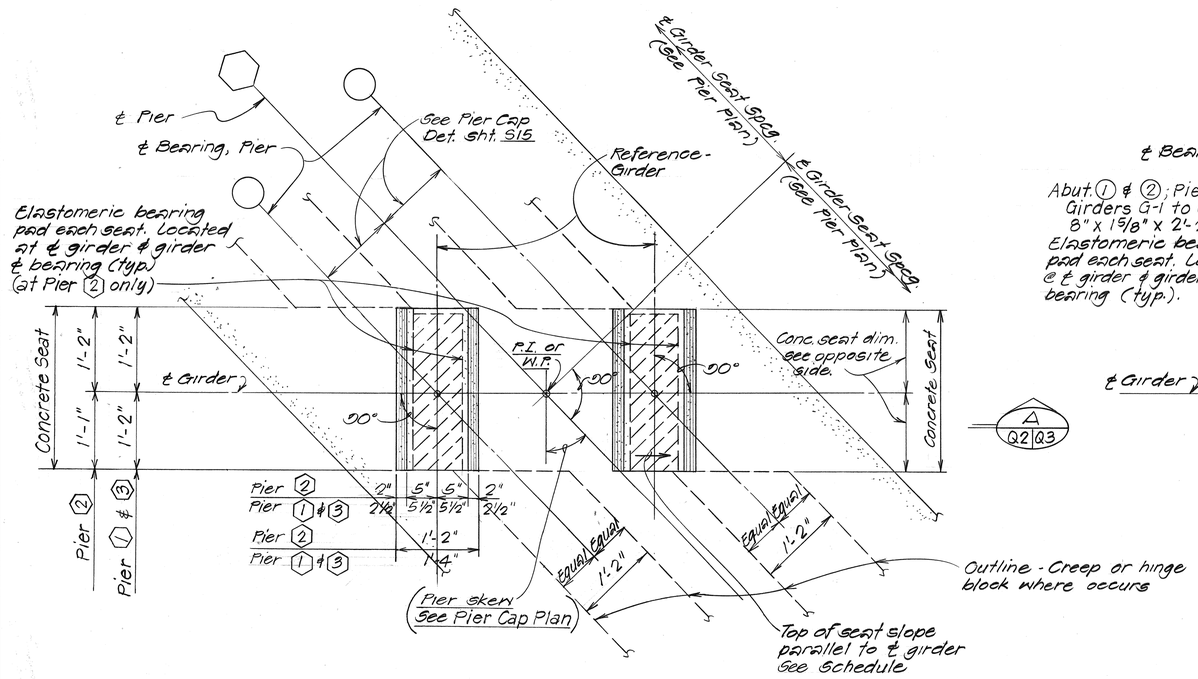

AT PIER CAP

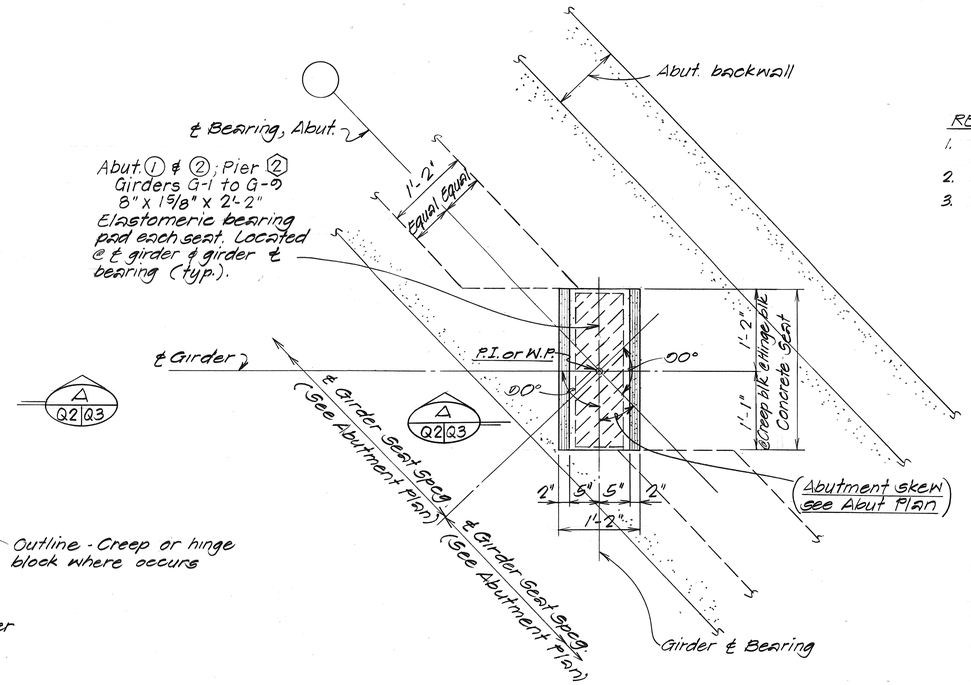

AT ABUTMENT

REFERENCE NOTE:

1. Refer to sht. Q3 for concrete seat, hinge & creep block details.
2. Refer to sht. S7 & S8 for abutment details.
3. Refer to sht. S16 for pier cap details.

NOTE:
All abut. bearing seat elevations are based on steel laminated elastomeric bearing pads. If fabric laminations are used in lieu of the steel, appropriate revisions shall be made to the bearing seat elevations to reflect the reduction in thickness of the bearing pads. Any such revision shall be approved by the Engineer.

PART PLAN - TYPICAL GIRDER CONCRETE SEAT

Scale: 1" = 1'-0"

TOP CONCRETE SEAT ELEVATION & SLOPE SCHEDULE (AT GIRDER & BEARING)

LOCATION / GIRDER NO.	ABUTMENT BEARING 1	DIRECTION	TOP SEAT SLOPE		1: 3	1: 4	DIRECTION	TOP SEAT SLOPE		2: 5	2: 6	DIRECTION	TOP SEAT SLOPE		3: 4	3: 3	DIRECTION	TOP SEAT SLOPE		ABUTMENT BEARING 2
G-1	363.65	-	1/16:12	-	363.01	363.00	+	0:12	+	362.96	362.98	+	1/8:12	+	364.01	364.05	+	3/16:12	+	365.70
G-2	363.79	-	Do	-	363.20	363.19	+	Do.	+	363.19	363.22	+	Do.	+	364.30	364.34	+	Do.	+	366.04
G-3	363.85	-	Do.	-	363.30	363.30	+	Do.	+	363.35	363.37	+	Do.	+	364.50	364.54	+	3/16:12	+	366.29
G-4	363.91	-	Do.	-	363.41	363.41	+	0:12	+	363.51	363.53	+	1/8:12	+	364.71	364.75	+	7/32:12	+	366.55
G-5	363.74	-	1/16:12	-	363.29	363.29	+	1/32:12	+	363.43	363.46	+	5/32:12	+	364.68	364.72	+	Do.	+	366.57
G-6	363.56	-	1/32:12	-	363.16	363.16	+	Do.	+	363.35	363.38	+	Do	+	364.65	364.69	+	Do.	+	366.58
G-7	363.38	-	Do.	-	363.03	363.03	+	Do.	+	363.27	363.30	+	Do	+	364.62	364.66	+	Do	+	366.60
G-8	363.21	-	Do.	-	362.90	362.91	+	Do.	+	363.19	363.22	+	Do	+	364.59	364.63	+	7/32:12	+	366.62
G-9	362.95	-	1/32:12	-	362.70	362.70	+	1/32:12	+	363.03	363.07	+	5/32:12	+	364.48	364.52	+	1/4:12	+	366.56

SURVEY PLOTTED BY
DRAWN BY
TRACED BY
DESIGNED BY
QUANTITIES BY
CHECKED BY
DATE
ORIGINAL PLAN
NOTE BOOK
No.

STATE OF HAWAII
DEPARTMENT OF TRANSPORTATION
HIGHWAYS DIVISION

TYPICAL DETAILS
PLAN - GIRDER CONCRETE SEAT & MISCELLANEOUS SCHEDULES
KAUMUALII HIGHWAY
PROJ. NO. BR-F-050-1(7)

Scale: As Noted Date: Aug. 1987

SHEET No. Q2 OF 7 SHEETS

FED. ROAD DIST. NO.	STATE	FED. AID PROJ. NO.	FISCAL YEAR	SHEET NO.	TOTAL SHEETS
HAWAII	HAW.	BR-F-050-1(7)	1988	49	75

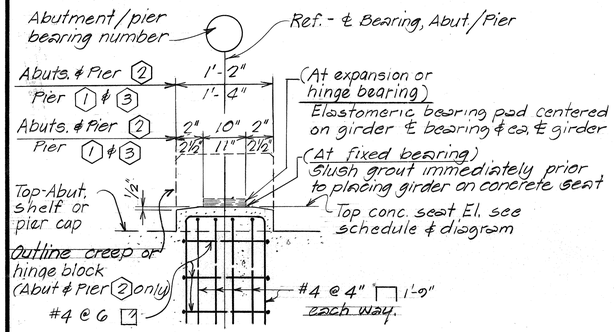

SHOWING REINFORCEMENT AND DIMENSIONS

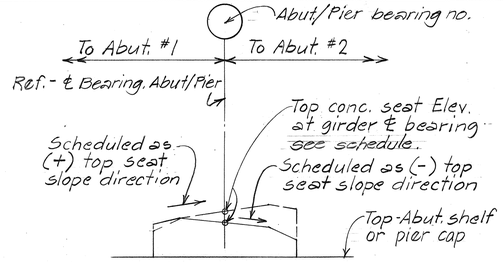

Note: Top seat slope direction normal to bearing line.

DIAGRAM - TOP OF SEAT SLOPE CONDITIONS

TYPICAL SEAT SECTION (A Q3|Q3)

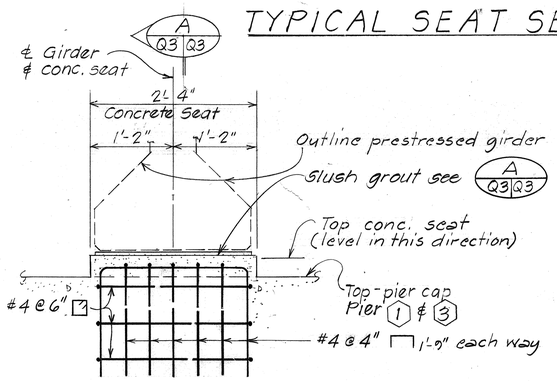

SEAT ELEVATION (AT FIXED BEARING)

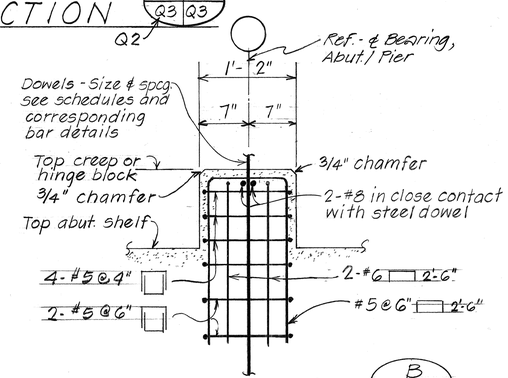

TYPICAL SECTION (B Q3|Q3)
(AT HINGE OR CREEP BLOCK)
Scale: 1" = 1'-0"

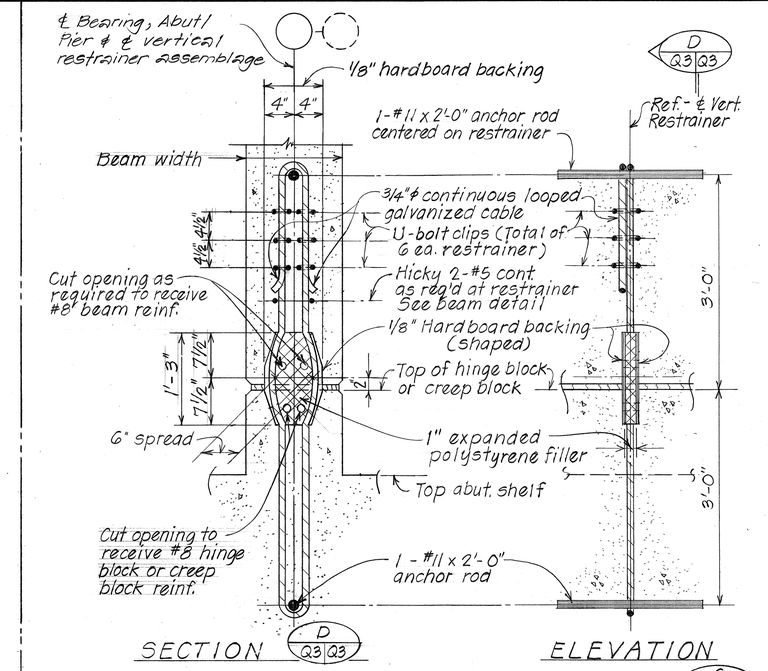

TYPICAL VERTICAL RESTRAINER DETAILS (G 519|Q3)
Scale: 1" = 1'-0"

NOTE:
1. Restrainer assemblage incidental to concrete & will not be paid for separately.
2. Restrainer assemblage shall be securely held in place while placing concrete.

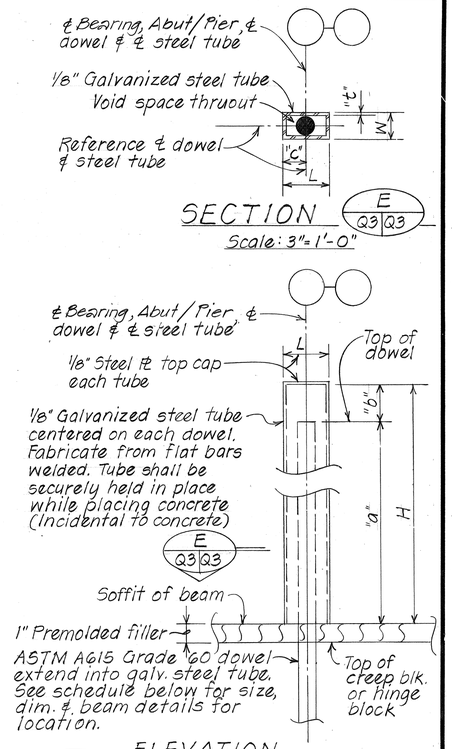

(F Q3|Q3) TYPICAL DETAIL

EXPANSION END HINGE DOWEL AND METAL TUBE Scale: 3" = 1'-0"

SCHEDULE - EXP. HINGE DOWELS & METAL TUBE SIZE & DIMENSION

ITEM / LOCATION	DOWELS			METAL TUBE				
	SIZE	a	b	L	W	H	t	
ABUT. (1)	1"ϕ x 6'-0"	2'-6"	1"	2¾"	1⅜"	2'-7"	⅛"	1⅜"
ABUT. (2)	1"ϕ x 6'-0"	2'-6"	1"	2¾"	1⅜"	2'-7"	⅛"	1⅜"
PIER (1)	1"ϕ x 6'-0"	3'-0"	—	—	—	—	—	—
PIER (2)	1"ϕ x 6'-0"	2'-6"	1"	2¾"	1⅜"	2'-7"	⅛"	1⅜"
PIER (3)	1"ϕ x 6'-0"	3'-0"	—	—	—	—	—	—

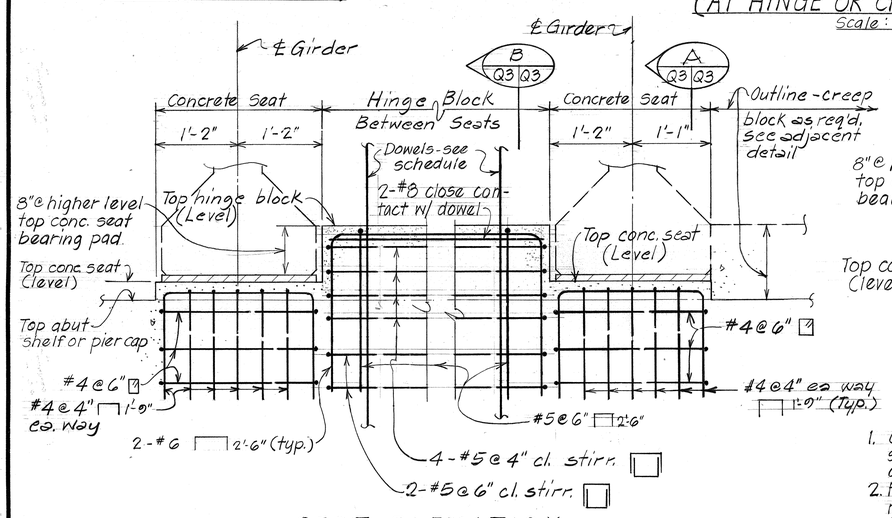

SEAT ELEVATION (AT HINGE BLOCK)

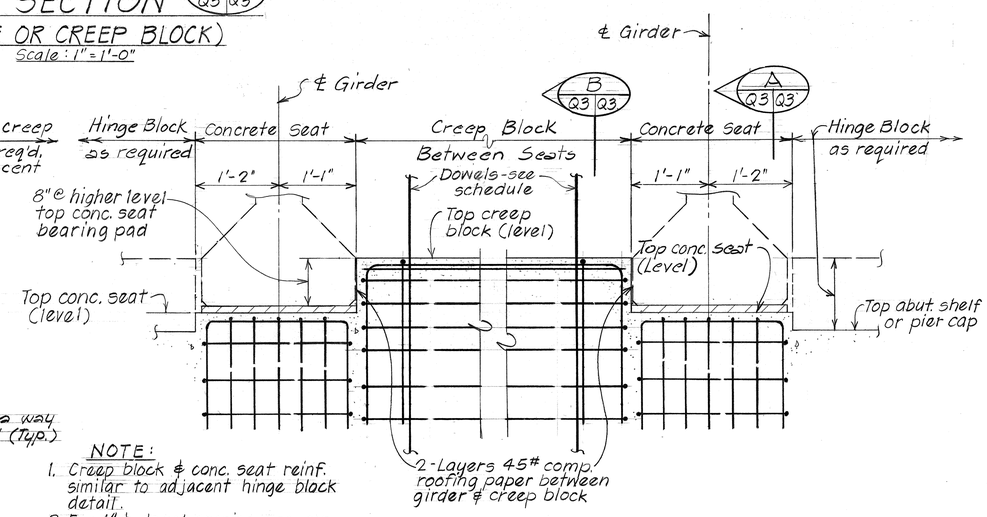

NOTE:
1. Creep block & conc. seat reinf. similar to adjacent hinge block detail.
2. For 1"ϕ dowel spacing see corresponding beam details.

SEAT ELEVATION (AT CREEP BLOCK)

TYPICAL-CONCRETE SEATS, HINGE & CREEP BLOCKS DETAILS
Scale: 1" = 1'-0"

ORIGINAL PLAN	SURVEY PLOTTED BY	DATE
	DRAWN BY	
	TRACED BY	
NOTE BOOK	DESIGNED BY	
	QUANTITIES BY	
No.	CHECKED BY	

STATE OF HAWAII
DEPARTMENT OF TRANSPORTATION
LAND TRANSPORTATION FACILITIES DIVISION

TYPICAL DETAILS
CONCRETE SEATS
HINGE BLOCK, CREEP BLOCK
VERTICAL RESTRAINER
KAUMUALII HIGHWAY
PROJ. NO. BR-F-050-1(7)

Scale: As Noted Date: Aug. 1987

SHEET No. Q3 OF 7 SHEETS

FED. ROAD DIST. NO.	STATE	FED. AID PROJ. NO.	FISCAL YEAR	SHEET NO.	TOTAL SHEETS
HAWAII	HAW.	BR-F-050-1(7)	1988	50	15

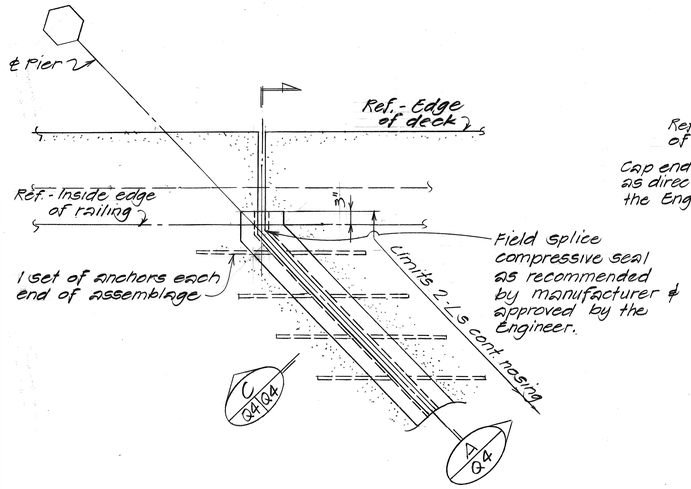

AT SKEW

PART PLAN Scale: 3/4" = 1'-0"

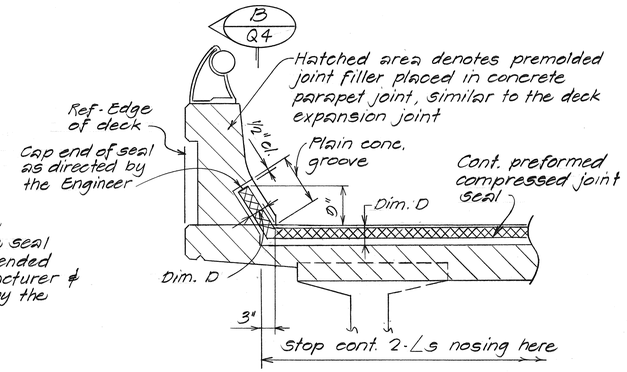

AT SKEW

SECTION A Q4

Scale: 3/4" = 1'-0"

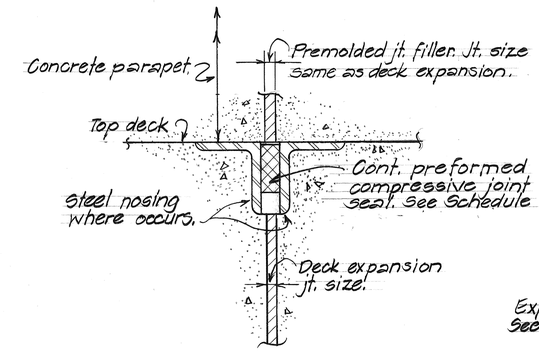

SECTION B Q4

No Scale

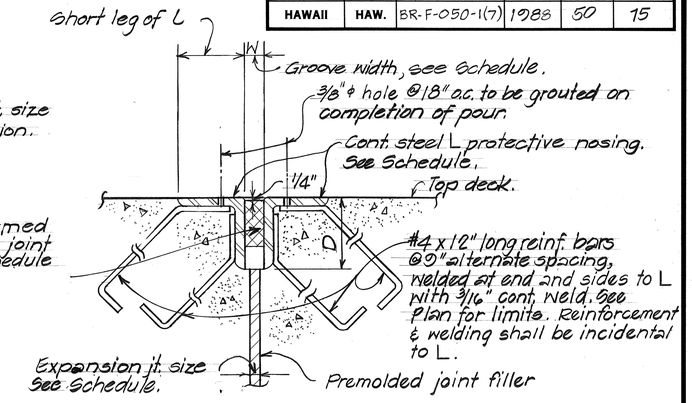

AT STEEL ANGLE PROTECTIVE NOSING

SECTION C Q4 Q4

No Scale

S10

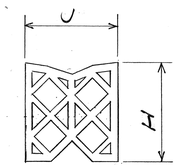

JOINT SEAL

NOTE:

1. Steel angle protective nosing assemblage shall be hot-dipped galvanized after fabrication.
2. Preformed compressive joint seal and all other components of the protective nosing assemblage, including the steel angles, shall be incidental to concrete & will not be paid for separately.
3. Preformed compressive seal shall be the structural type used in bridge decks.

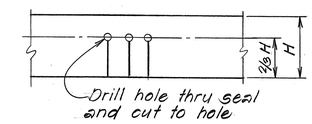

UPTURN

DETAIL OF SEAL AT BEND

TYPICAL TRANSVERSE DECK EXPANSION JOINT DETAIL

DECK EXPANSION JOINT & SEALER SCHEDULE						
LOCATION	DECK EXP. JOINT SIZE	Groove Dim.		Steel Angle Protective Nosing	JOINT SEALER (Dimensions & Tolerances)	
		W	D		J	H
PIERS (2)	1/2"	1 1/2"	6"	6 x 3 1/2 x 1/2	$3^{+1/4}_{-0}$	3 18/32 ± 3/16
PIER ⬡						

NOTE:

Transverse deck construction joint shall be used at these locations. The portion of the pour indicated between construction joints over the pier shall not be poured until the pours for the adjacent positive moment areas have been completed.

Transverse deck construction joints may be eliminated if permitted by the Engineer in writing. If the construction joints are eliminated, water reducing and retarding admixture conforming to AASHTO Designation: M194, Type D, shall be added to the deck concrete over the pier within the indicated lines. The type of the admixture shall be such that the amount of dosage used will produce the retardation required. The type and dosage of the admixture, and the method of pour shall be approved by the Engineer.

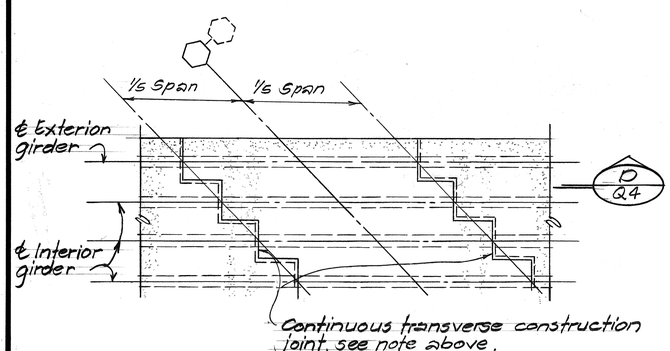

PART PLAN

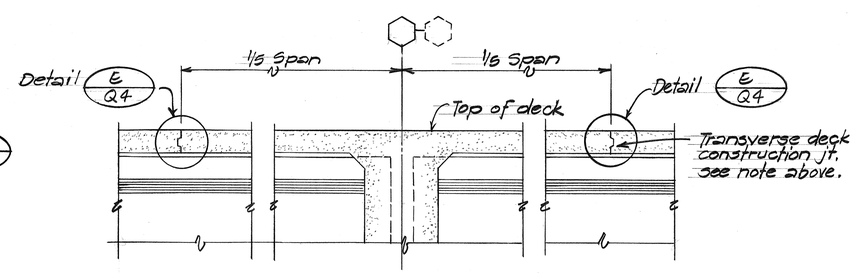

DETAIL D Q4

(CONTINUOUS SLAB OVER PIER)

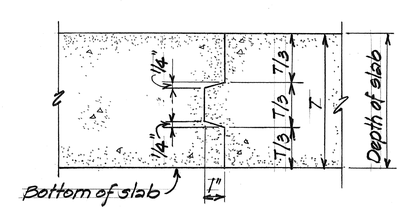

DETAIL E Q4

TYPICAL TRANSVERSE DECK CONSTRUCTION JOINT DETAIL

STATE OF HAWAII
DEPARTMENT OF TRANSPORTATION
HIGHWAYS DIVISION

TYPICAL DETAILS

TRANSVERSE DECK EXPANSION AND CONSTRUCTION JT. DETAILS

KAUMUALII HIGHWAY
PROJ. NO. BR-F-050-1(7)

Scale: As Shown Date: Aug. 1987

SHEET No. Q4 OF 7 SHEETS

ORIGINAL PLAN | SURVEY PLOTTED BY | DRAWN BY | TRACED BY | DESIGNED BY | QUANTITIES BY | CHECKED BY | NOTE BOOK | No. | DATE

FED. ROAD DIST. NO.	STATE	FED. AID PROJ. NO.	FISCAL YEAR	SHEET NO.	TOTAL SHEETS
HAWAII	HAW.	BR-F-050-1(7)	1988	51	75

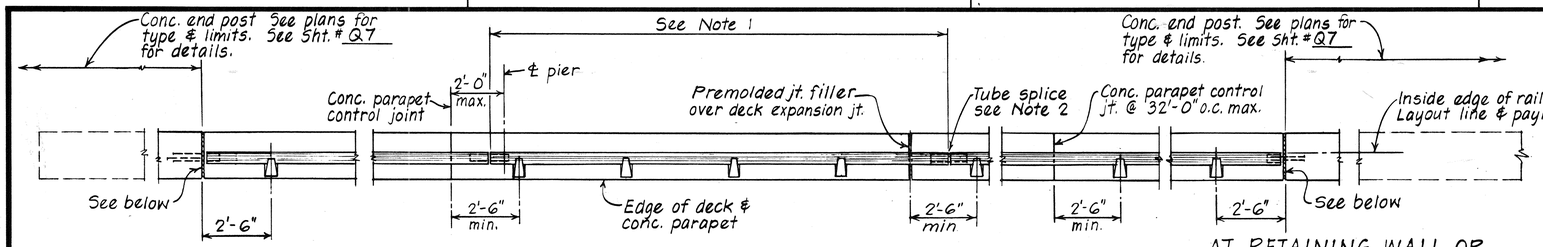

AT BRIDGE END POST — INTERMEDIATE — AT RETAINING WALL OR WING WALL END POST

RAILING PLAN

Scale: 3/8" = 1'-0"

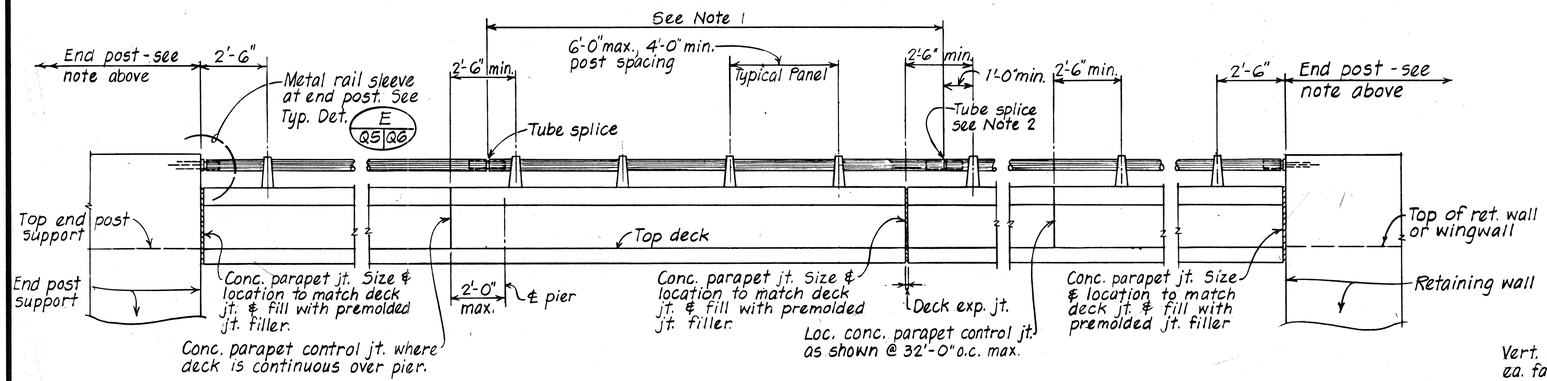

AT BRIDGE END POST — INTERMEDIATE — AT RETAINING WALL OR WING WALL END POST

EXTERIOR RAILING ELEVATION

Scale: 3/8" = 1'-0"

NOTES:

1. Tubing shall be continuous over not less than 4 posts unless otherwise noted.
2. All rails shall be spliced in the panel spanning deck expansion joints. Increase joint width between tube to 1½" and increase sleeve length by 1". (See Tube Splice Detail) sht. # Q6
3. Rail post shall be normal to grade.
4. No more than one tube splice per panel shall be permitted except as otherwise noted.
5. ⅛" thick, full size elastomeric pads shall be placed between every post base and concrete surface.
6. Delete non-applicable provisions and details.

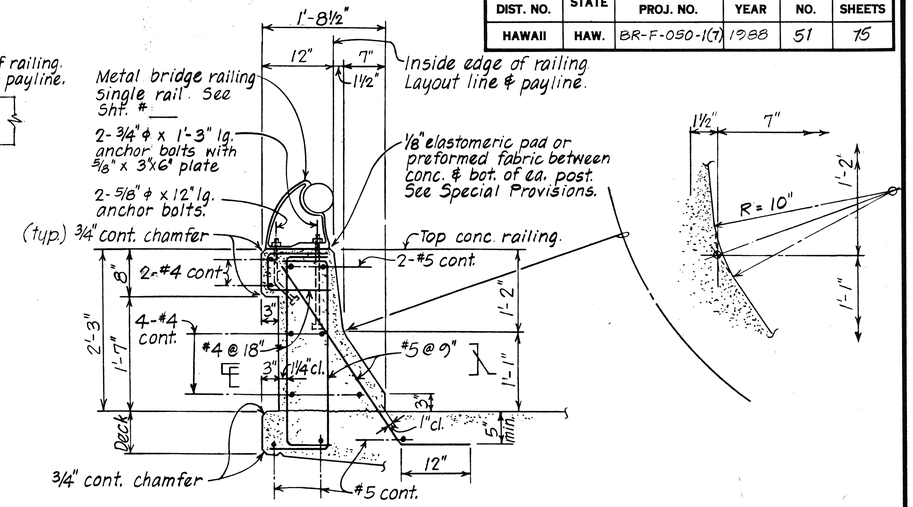

TYPICAL CONCRETE PARAPET SECTION

Scale: 1" = 1'-0"

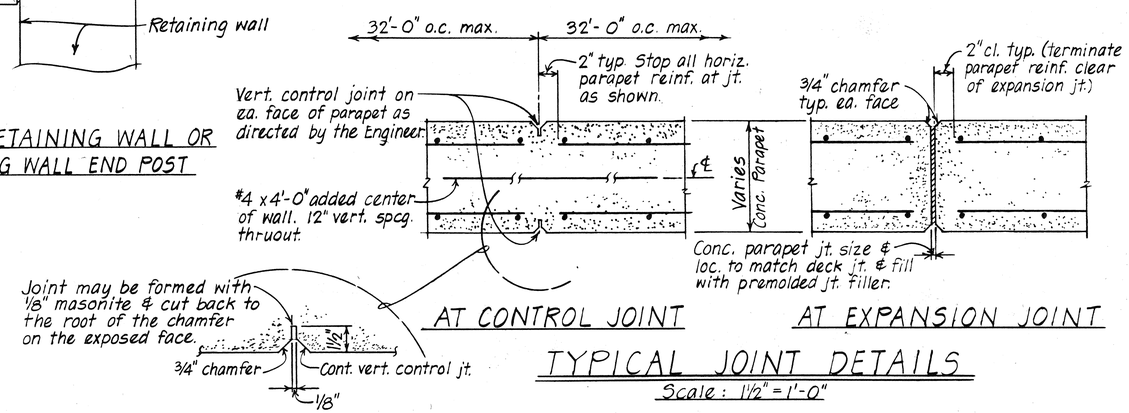

AT CONTROL JOINT — AT EXPANSION JOINT

TYPICAL JOINT DETAILS

Scale: 1½" = 1'-0"

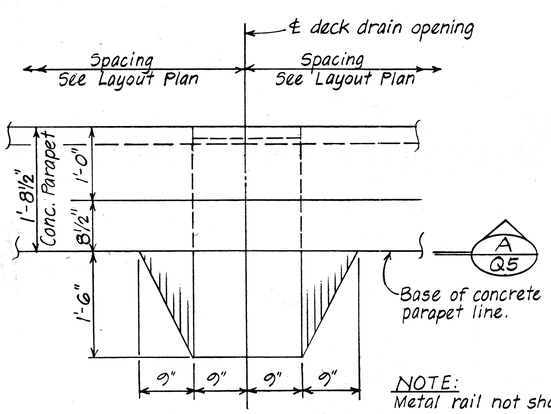

NOTE: Metal rail not shown.

TYPICAL PLAN

DECK DRAIN DETAIL AT RAIL

Scale: 1" = 1'-0"

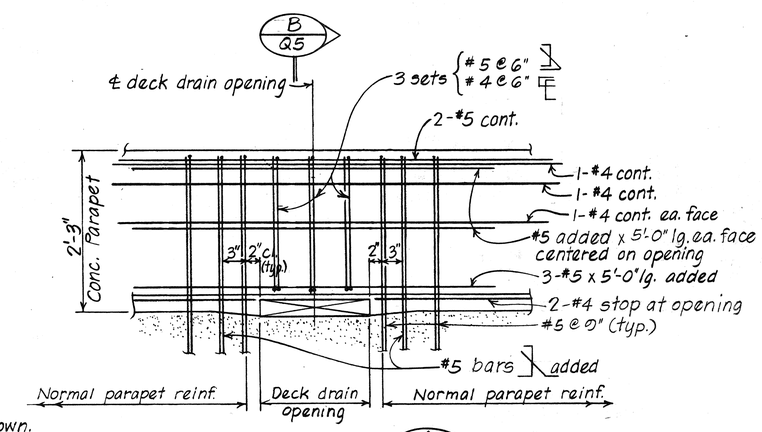

ELEVATION A Q5

Scale: 1" = 1'-0"

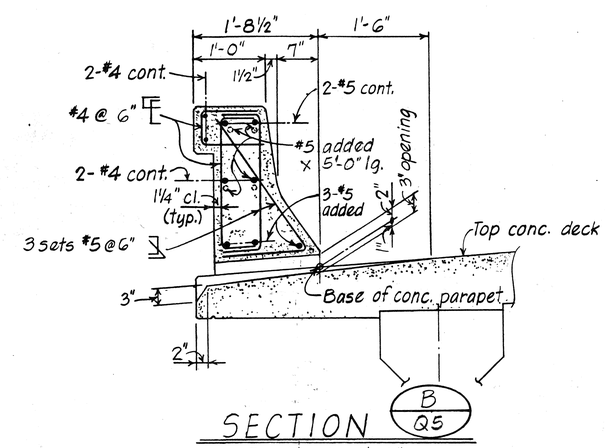

SECTION B Q5

Scale: 1" = 1'-0"

ORIGINAL PLAN		DATE
	SURVEY PLOTTED BY	
	DRAWN BY N.K.	
	TRACED BY N.K.	
NOTE BOOK	DESIGNED BY D.C.O.	
	QUANTITIES BY	
No.	CHECKED BY	

STATE OF HAWAII
DEPARTMENT OF TRANSPORTATION
HIGHWAYS DIVISION

TYPICAL DETAILS
CONCRETE BRIDGE RAILING
TYPE - ONE RAIL ON PARAPET

Proj. No. BR-F-050-1(7)

Scale: As Noted — Date: Aug. 1987

SHEET No. Q5 OF 7 SHEETS

FED. ROAD DIST. NO.	STATE	FED. AID PROJ. NO.	FISCAL YEAR	SHEET NO.	TOTAL SHEETS
HAWAII	HAW.	BR-F-050-1(7)	1988	52	75

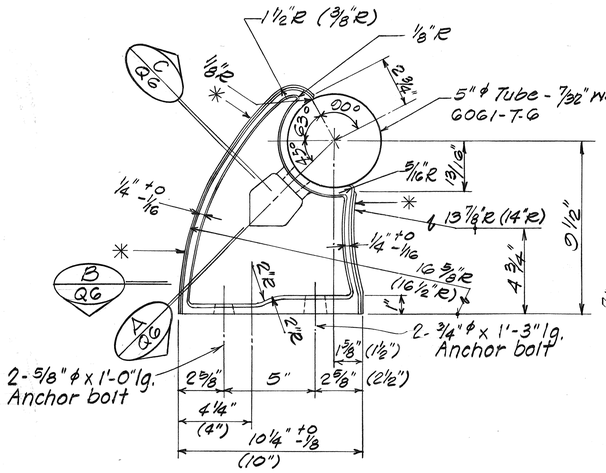

SIDE ELEVATION

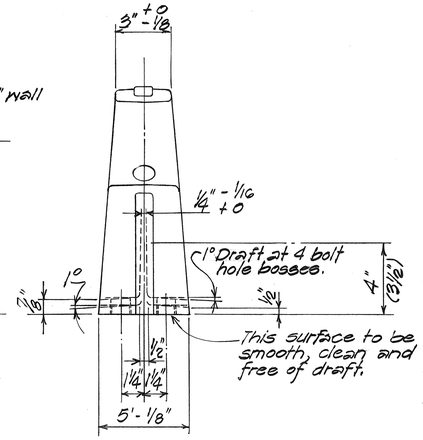

END ELEVATION

NOTE:

* Casting to be supplied with a standard scratch brush finish on entire gating rib surface and as indicated by an asterisk (*). Finish shall be approved by the Engineer.
Casting to be neatly trimmed and any protruding flash to be broken off.
Unless otherwise specified, draft angles to be 3° corner radii to be ± 3/32"R, fillet radii to be 3/8"R, casting tol. to be ± 1/16", wall thickness to be ± 1/32".
Dimensions may be as shown or as shown in parenthesis ( ).

TYPICAL RAIL POST DETAILS

Scale: 3" = 1'-0"

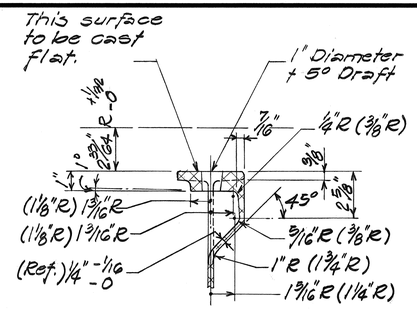

SECTION A Q6

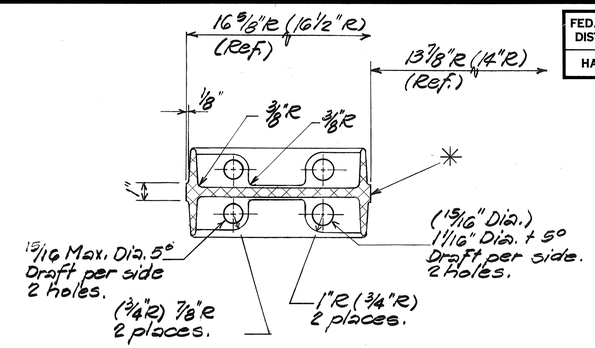

SECTION B Q6

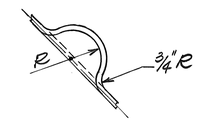

SECTION C Q6

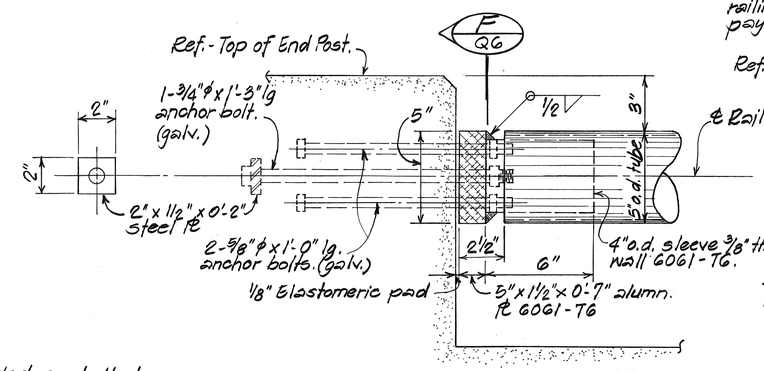

TYPICAL DETAIL E Q5 Q6 Q7

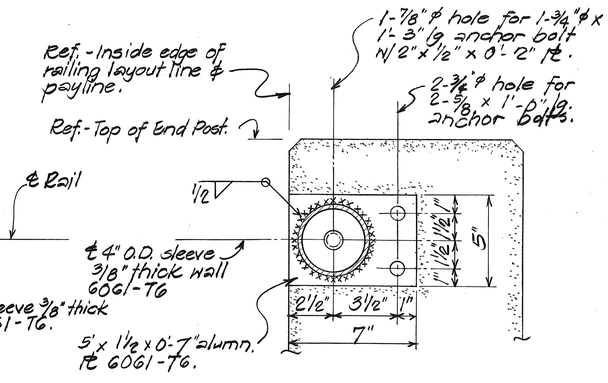

SECTION F Q6

METAL RAIL SLEEVE AT END POST

Scale: 3" = 1'-0"

NOTE:

Toggle Bolt - Cadmium plating on steel - Type NS 0.0005" thick ASTM - A165 (all parts).

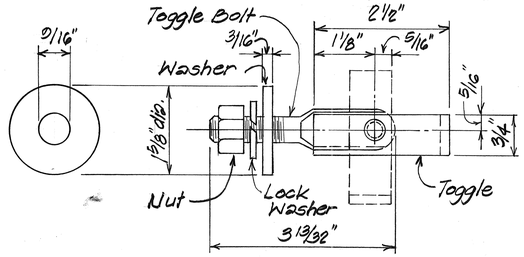

WASHER

SIDE ELEVATION ASSEMBLAGE

Special rivet - material 1038 O.R. steel, heat treated ASTM A195

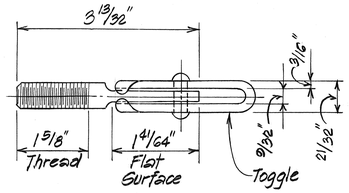

TOP PLAN

1/2" ϕ STEEL TOGGLE BOLT DETAIL

NOTE:

Anchor bolts shall be embedded such that the thread are excluded from the shear plane & approximately 2 threads are exposed above the nut.

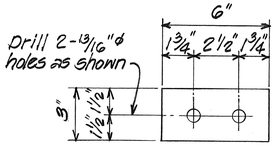

PLAN

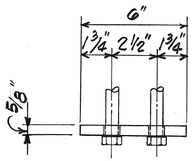

ELEVATION

ANCHOR ℞ DETAIL

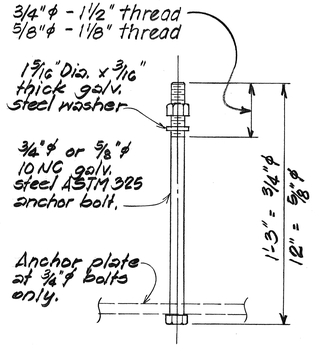

ANCHOR BOLT

TYPICAL RAIL POST STEEL ANCHOR BOLT ASSEMBLY

Scale: 3" = 1'-0"

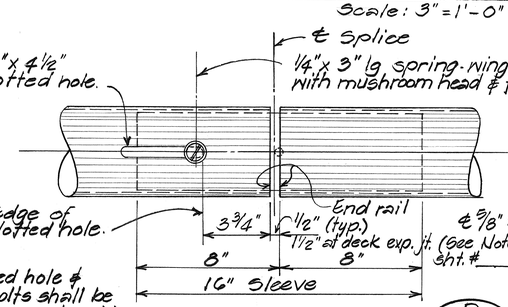

NOTE:

Slotted hole & toggle bolts shall be located on under side of tube.

REFLECTED VIEW

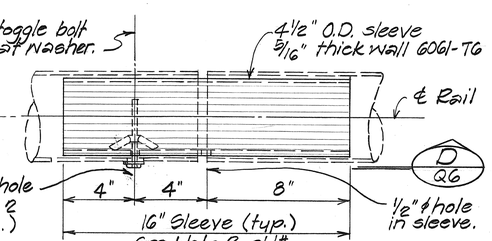

SLEEVE (FRONT VIEW ELEV.)

TUBE SPLICE DETAIL

Scale: 3" = 1'-0"

STATE OF HAWAII
DEPARTMENT OF TRANSPORTATION
HIGHWAYS DIVISION

TYPICAL DETAILS
ALUMINUM BRIDGE RAILING
TYPE - ONE RAIL ON PARAPET
KAUMUALII HIGHWAY
PROJ. NO. BR-F-050-1(7)

Scale: As Shown Date: Aug. 1987

SHEET No. Q6 OF 7 SHEETS

ORIGINAL PLAN	SURVEY PLOTTED BY	SY
	DRAWN BY	
	TRACED BY	
NOTE BOOK	DESIGNED BY	
	QUANTITIES BY	GT, LA
No.	CHECKED BY	
	DATE	3/85

Steel Anchor Bolt Assembly

FED. ROAD DIST. NO.	STATE	FED. AID PROJ. NO.	FISCAL YEAR	SHEET NO.	TOTAL SHEETS
HAWAII	HAW.	BR-F-050-1(7)	1988	53	75

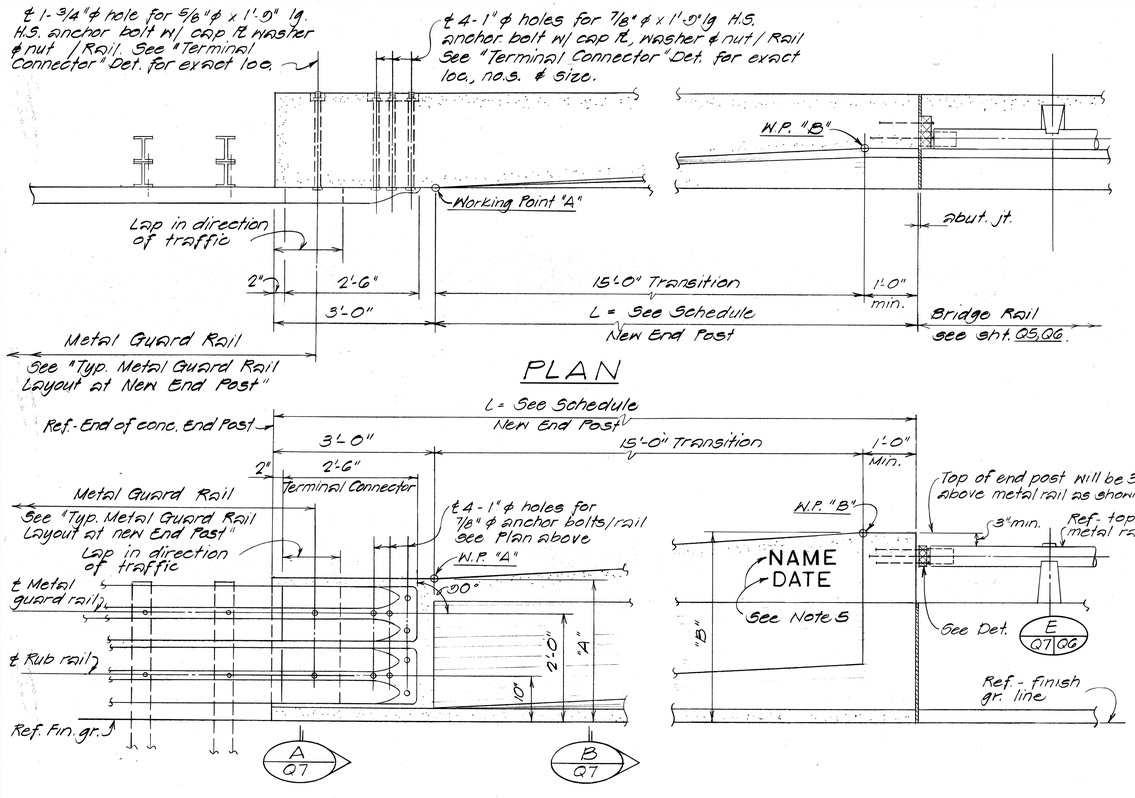

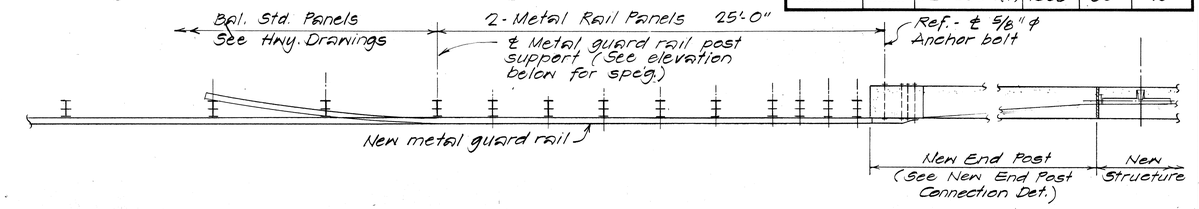

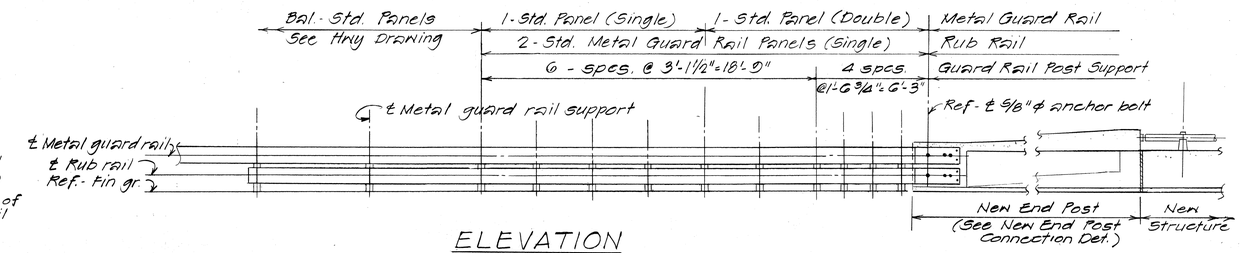

TYPICAL METAL GUARD RAIL LAYOUT AT NEW END POST

Scale: 1/4" = 1'-0"

NOTES:

1. All anchor bolts shall be high strength bolts conforming to the requirements of ASTM A325 & Galv.
2. "Terminal Connector" including anchor bolts, nuts and washers, shall be galvanized.
3. "Terminal Connector" shall be fabricated from 10 gage steel conforming to the requirements of AASHTO M180.
4. First 25'-0" of guard rail and rub rail adjoining "Terminal Connector" shall be galvanized steel.
5. Place name & date of structure as shown. For location, see "Layout Plan" on contract drawing. Date will be year structure is completed. For letter size and detail see Standard Plans B-01.

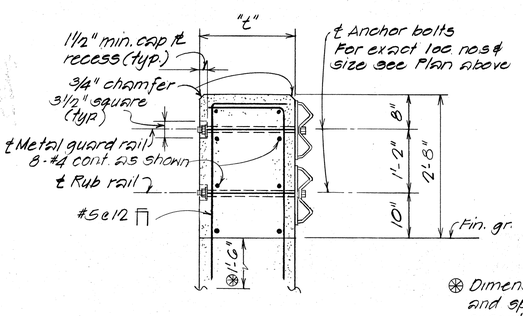

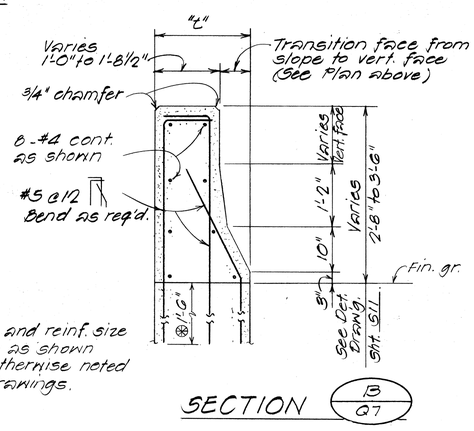

⊛ Dimensions and reinf. size and spacing as shown except as otherwise noted on detail drawings.

END POST DIMENSION SCHEDULE				
STRUCTURE	⊛ "L"	"t"	"A"	"B"
Huleia Stream Bridge	19'-0"	1'-8 1/2"	2'-8"	3'-6"

TYPICAL END POST CONNECTION DETAIL

Scale: 3/4" = 1'-0"

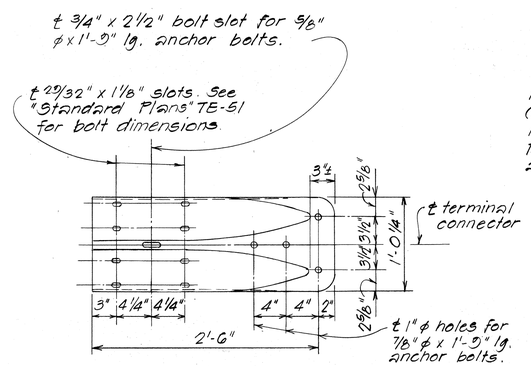

TERMINAL CONNECTOR DETAIL

N.T.S.

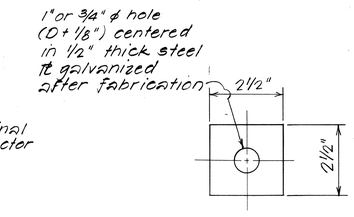

TYPICAL CAP ℞ DETAIL

N.T.S.

STATE OF HAWAII
DEPARTMENT OF TRANSPORTATION
HIGHWAYS DIVISION

TYPICAL DETAILS

METAL GUARD RAIL CONNECTION AT CONCRETE END POST

PROJ. NO BR-F-050-1(7)

Scale: As Shown Date: Aug. 1987

SHEET No. Q7 OF 7 SHEETS

ORIGINAL PLAN	SURVEY PLOTTED BY	DATE
	DRAWN BY	
	TRACED BY	
NOTE BOOK	DESIGNED BY	
	QUANTITIES BY	
No.	CHECKED BY	