FED. ROAD DIST. NO.	STATE	FED. AID PROJ. NO.	FISCAL YEAR	SHEET NO.	TOTAL SHEETS
HAWAII	HAW.	R05-050-1(3)	1979	5	19

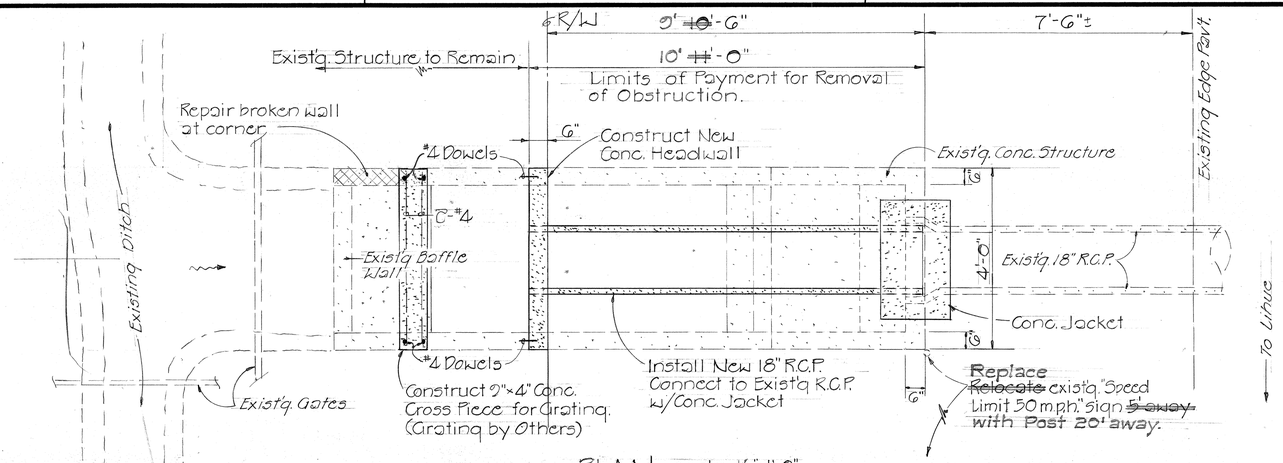

PLAN scale: 1/2"=1'-0"

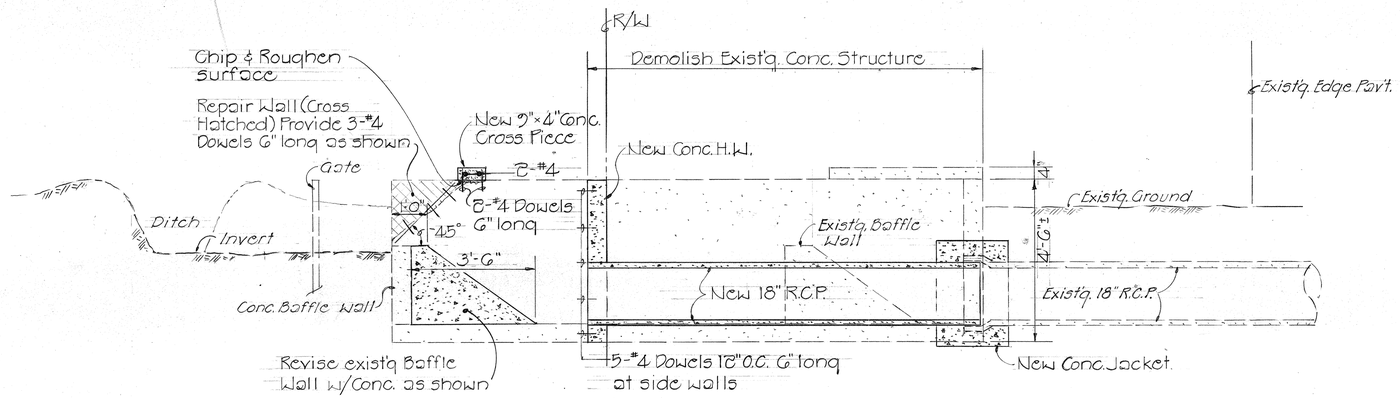

LONGITUDINAL SECTION scale: 1/2"=1'-0"

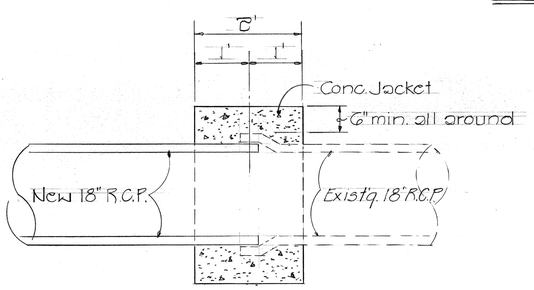

DETAIL ~ CONC. JACKET

scale: 3/4"=1'-0"

CONSTRUCTION NOTES:

1- The Contractor shall coordinate his work with the Lihue Plantation Co. so as not to disrupt the Plantations normal schedule of operations of the structure.

2- A suitable concrete bonding material shall be applied to all existing concrete surfaces coming in contact with new concrete, and existing concrete surfaces shall be cleaned prior to application of bonding material.

EST. QUANT.

Class B Conc. other than at Bridges	=	~~1.5~~ 1.47 C.Y.
Reinforcing Steel other than at Bridges	=	~~11~~ 8 Lb.
18-inch R.C.P., Class III	=	~~18~~ 16 L.F.
Removal of Obstruction	=	Lump Sum
Reset Regulatory Sign	=	~~1~~ 0 Ea.

DEMOLISHING & RECONSTRUCTION OF EXISTING STRUCTURE & INSTALLATION OF NEW 18" R.C.P. ~ STA. 193+84± - VICINITY HULEIA RD.

ORIGINAL PLAN		
	SURVEY PLOTTED BY	DATE
	DRAWN BY	"
	TRACED BY	"
NOTE BOOK	DESIGNED BY	"
	QUANTITIES BY	"
No.	CHECKED BY	"

STATE OF HAWAII
DEPARTMENT OF TRANSPORTATION
LAND TRANSPORTATION FACILITIES DIVISION
KAUMUALII HWY., SAFETY IMPROVEMENTS FROM PUHI RD. TOWARDS MALUHIA RD.
PROJ. No. R05-050-1(3)
DEMOLISHING & RECONSTRUCTION OF EXISTING STRUCTURE & INSTALLATION OF NEW 18" REINFORCED CONC. PIPE
Scale: As Shown July 1978
SHEET No. 1 OF 15 SHEETS

FED. ROAD DIST. NO.	STATE	FED. AID PROJ. NO.	FISCAL YEAR	SHEET NO.	TOTAL SHEETS
HAWAII	HAW.	(205-050-1(3))	1979	6	12

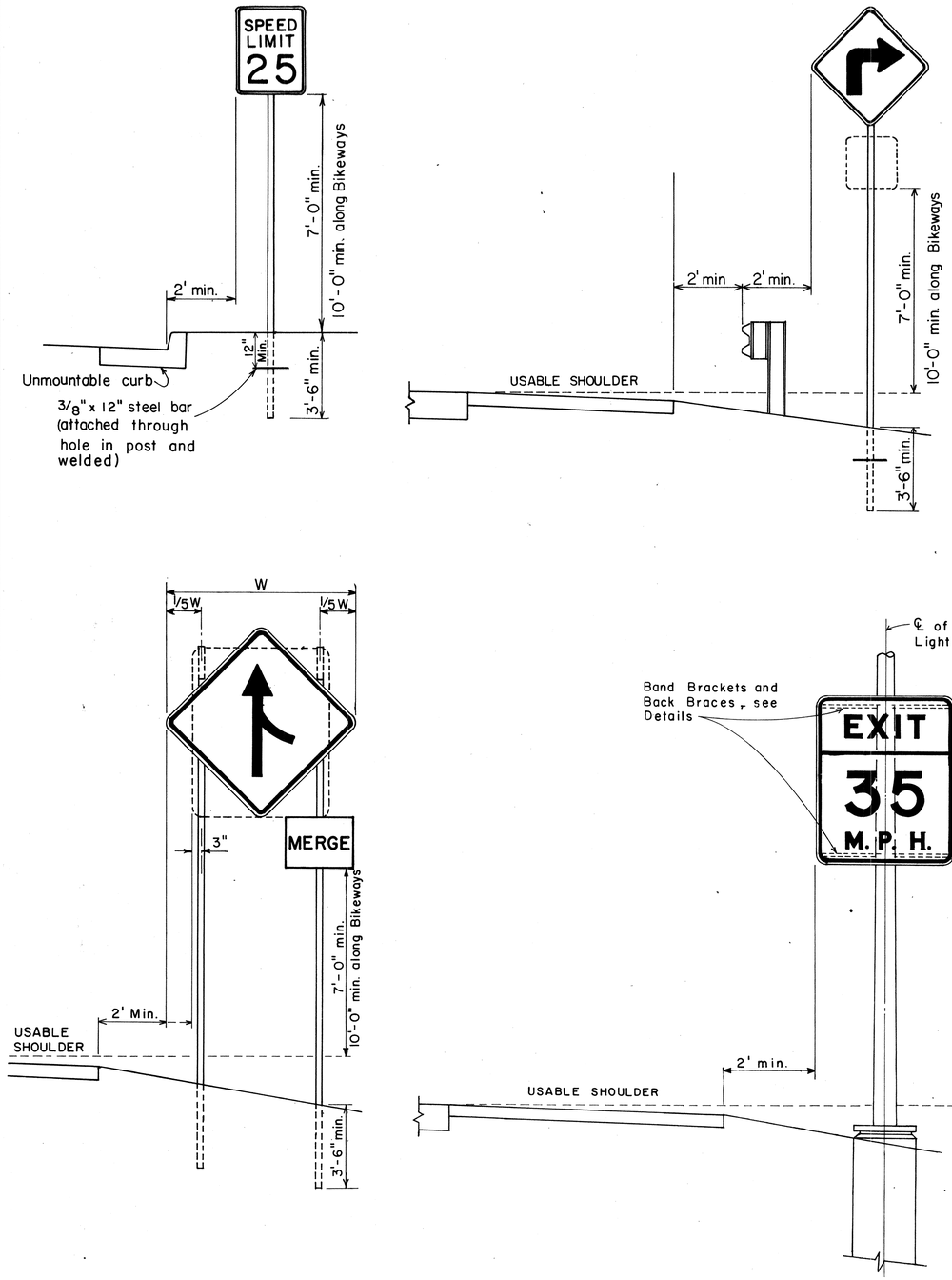

HEIGHT AND LATERAL LOCATION OF SIGNS
TYPICAL INSTALLATION

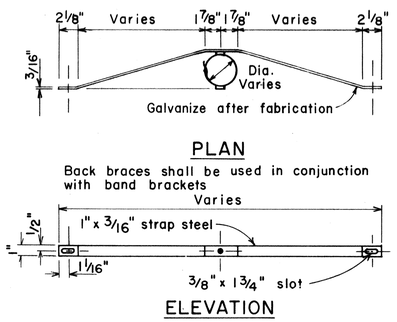

BACK BRACE DETAILS FOR BALANCED SIGN INSTALLATION

GENERAL NOTES

1. Signs 48" and wider or larger than 10 sq. ft. in area shall be mounted on two sign posts.
2. All signs larger than 10 sq. ft. in area or 48" inches and wider, and mounted on other than two posts supports (i.e., on highway lighting poles) shall have at least two sets of band brackets and back braces.
3. All signs 28 sq. ft. in area or larger and mounted on other than two posts supports (i.e., on highway lighting poles) shall have at least three sets of band brackets and back braces.
4. Signs shall be attached to post with 5/16" galv. bolts with nuts and 7/8" x 0.06" stainless steel washers with neoprene rubber gasket.
5. Sign posts shall extend 3 1/2" above sign where required for City and County street name signs.
6. (R) or (L) indicates right or left and shall be as shown on the plans.

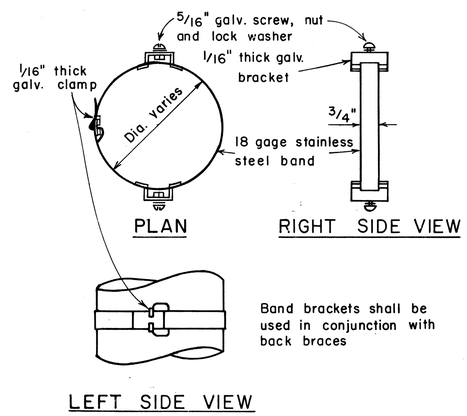

TYPICAL BAND BRACKET FOR MOUNTING TRAFFIC SIGNS

ORIGINAL PLAN	SURVEY PLOTTED BY	DATE
	SURVEYED BY	"
	TRACED BY	"
NOTE BOOK	DESIGNED BY	"
	QUANTITIES BY	"
No.	CHECKED BY	"

APPROVAL RECOMMENDED:
Eiichi Tanaka — TRAFFIC ENGINEER — 11/10/77 DATE

APPROVED:
Herbert Z. Takeichi — ASSISTANT CHIEF, ENGINEERING — 11/15/77 DATE

NO.	REVISION	APPROVED BY	DATE
1	Supercedes Sht. DT-100 approved 12/30/69	H.T.	11/15/77

STATE OF HAWAII
DEPARTMENT OF TRANSPORTATION
LAND TRANSPORTATION FACILITIES DIVISION

STANDARD DETAILS
MISCELLANEOUS SIGN DETAILS

Not to scale — June, 1977

SHEET No. 2 OF 15 SHEETS DT 100

FED. ROAD DIST. NO.	STATE	FED. AID PROJ. NO.	FISCAL YEAR	SHEET NO.	TOTAL SHEETS
HAWAII	HAW.	R05-050-1(3)	1979	7	10

STOP
R1-1 30"x 30"
R1-1-A 36"x 36"

4-WAY
R1-3 12"x 6"
R1-3-A 18"x 9"

YIELD
R1-2 36"x36"x36"
R1-2-A 48"x48"x48"

SPEED LIMIT 50
R2-1(50) 24"x 30"
R2-1(50)-A 48"x 60"

TRUCKS 40
R2-2(40) 24"x 24"
R2-2(40)-A 48"x 48"

SPEED LIMIT 50 MINIMUM 40
R2-4a(50/40) 24"x 48"
R2-4a(50/40)-A 48"x 96"

REDUCED SPEED 30 M.P.H.
R2-5b(30) 24"x 30"
R2-5b(30)-A 48"x 60"

NO RIGHT TURN
R3-1 24"x24" 24"x18"
R3-1-A 48"x48" 48"x36"

NO LEFT TURN
R3-2 24"x24" 24"x18"
R3-2-A 48"x48" 48"x36"

NO TURNS
R3-3 24"x 24"
R3-3-A 48"x 48"

NO U TURN
R3-4 24"x 24" 24"x18"
R3-4-A 48"x48" 48"x 36"

ONLY
R3-5(L) 30"x 36"
R3-5(L)-A 48"x60"

R3-6(L) 30"x 36"
R3-6(L)-A 48"x60"

RIGHT LANE MUST TURN RIGHT
R3-7(R) 30"x30"
R3-7(R)-A 48"x48"

ONLY
R3-8(L) 30"x30"
R3-8(L)-A 36"x36"
R3-8(L)-B 48"x48"

CENTER LANE LEFT TURN ONLY
R3-9 24"x 30"

DO NOT PASS
R4-1 24"x 30"

PASS WITH CARE
R4-2 24"x 30"

SLOWER TRAFFIC KEEP RIGHT
R4-3 24"x 30"
R4-3-A 48"x 60"

TRUCKS USE RIGHT LANE
R4-5 24"x 30"

TRUCK LANE 500 FEET
R4-6(500) 24"x30"

KEEP RIGHT
R4-7 24"x30" 24"x18"

KEEP LEFT
R4-8 24"x30" 24"x18"

DO NOT ENTER
R5-1 30"x 30"
R5-1-A 48"x 48"

NO TRUCKS
R5-2 24"x 24" 24"x 18"

COMMERCIAL VEHICLES EXCLUDED
R5-4 24"x 30"

NO BICYCLES
R5-6 24"x24" 24"x18"

WRONG WAY
R5-9 36"x 24"

ONE WAY
R6-1(R) 36"x12"

ONE WAY
R6-2(R) 18"x24"

NO PARKING ANY TIME
R7-1 12"x 18"
R7-1-A 24"x 30"

NO STOPPING OR STANDING
R7-4 12"x18"
R7-4-A 24"x30"

NO PARKING BUS STOP
R7-107(R) 12"x18"

2 HR PARKING 8:30 AM TO 5:30 PM
R7-108 12"x 18"

TOW-AWAY ZONE
R7-201 12"x 6"
R7-201-A 24"x12"

NO PARKING ON PAVEMENT
R8-1 24"x 30"

NO PARKING EXCEPT ON SHOULDER
R8-2 24"x 30"

NO PARKING
R8-3 24"x 30"

EMERGENCY PARKING ONLY
R8-4 30"x 24"
R8-4-A 48"x 36"

NO STOPPING ON PAVEMENT
R8-5 24"x 30"

NO STOPPING EXCEPT ON SHOULDER
R8-6 24"x 30"

EMERGENCY STOPPING ONLY
R8-7 30"x 24"
R8 7-A 48"x 36"

WALK ON LEFT FACING TRAFFIC
R9-1 18"x 24"

CROSS ONLY AT CROSS WALKS
R9-2 12"x 18"

NO PEDESTRIAN CROSSING
R9-3 12"x 18"

NO HITCH HIKING
R9-4 18"x 24"

CROSS ON GREEN LIGHT ONLY
R10-1 12"x 18"

CROSS ON WALK SIGNAL ONLY
R10-2 12"x 18"

PUSH BUTTON FOR GREEN LIGHT
R10-3 9"x 12"

PUSH BUTTON FOR WALK SIGNAL
R10-4 9"x 12"

LEFT ON ARROW ONLY
R10-5 24"x 30"

STOP HERE ON RED
R10-6 24"x 36"

DO NOT BLOCK INTERSECTION
R10-7 24"x 30"

USE LANE WITH GREEN ARROW
R10-8 24"x 30"

RIGHT TURN ON RED AFTER STOP
R10-9 24"x 30"

LEFT TURN SIGNAL
R10-10 24"x 30"

KEEP OFF MEDIAN
R11-1 24"x 30"

ROAD CLOSED
R11-2 48"x 30"

ROAD CLOSED 10 MILES AHEAD LOCAL TRAFFIC ONLY
R11-3(10) 60"x 30"

ROAD CLOSED TO THRU TRAFFIC
R11-4 60"x 30"

WEIGHT LIMIT 10 TONS
R12-1(10) 24"x30"

GENERAL NOTES

1. Sign details shall conform to the FHWA publications "Manual on Uniform Traffic Control Devices for Streets and Highways," 1971, and "Standard Highway Signs," 1972, and as amended.
2. All regulatory signs shall be reflectorized unless otherwise specified.
3. All regulatory signs shall have 3/8" bolt holes drilled at appropriate locations.
4. Numerals in ( ) indicates numerals to be inserted for sign message. (R) or (L) indicates right or left.

APPROVAL RECOMMENDED: Eiichi Tanaka 3/17/72
TRAFFIC ENGINEER DATE

APPROVED: Hubert Tatsuki 3-20-72
ASSISTANT CHIEF, ENGINEERING DATE

NO.	REVISION	APPROVED BY	DATE
1	Supersedes Sht. DT 101 Approved 12-30-69	H.T.	3/20/72
2	Revised General Note 1.	H.T.	10/16/74

STATE OF HAWAII
DEPARTMENT OF TRANSPORTATION
LAND TRANSPORTATION FACILITIES DIVISION

STANDARD DETAILS

REGULATORY SIGNS

NOT TO SCALE

ORIGINAL PLAN / NOTE BOOK / No. — SURVEY PLOTTED BY / DRAWN BY / TRACED BY / DESIGNED BY / QUANTITIES BY / CHECKED BY / DATE

K+E IMPERIAL TRACING CLOTH LA 3207

FED. ROAD DIST. NO.	STATE	FED. AID PROJ. NO.	FISCAL YEAR	SHEET NO.	TOTAL SHEETS
HAWAII	HAW.	R05-050-1(8)	1979	8	10

W1-1(R) 30"x30"
W1-1(R)-A 48"x48"

W1-2(R) 30"x30"
W1-2(R)-A 48"x48"

W1-3(R) 30"x30"
W1-3(R)-A 48"x48"

W1-4(R) 30"x30"
W1-4(R)-A 48"x48"

W1-5(R) 30"x30"
W1-5(R)-A 48"x48"

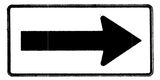

W1-6 48"x24"

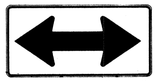

W1-7 48"x24"

W2-1 30"x30"
W2-1-A 48"x48"

W2-2 30"x30"
W2-2-A 48"x48"

W2-3(R) 30"x30"
W2-3(R)-A 48"x48"

W2-4 30"x30"
W2-4-A 48"x48"

W2-5 30"x30"
W2-5-A 48"x48"

W3-1 30"x30"
W3-1-A 36"x36"

W3-2 30"x30"
W3-2-A 36"x36"

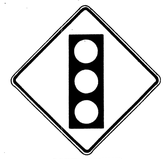

W3-3 36"x36"
24"x18"

W4-1(R) 30"x30"
24"x18"
W4-1(R)-A 48"x48"
24"x18"

W4-2(R) 36"x36"
W4-2(R)-A 48"x48"

W5-1 36"x36"

W5-2 30"x30"
W5-2-A 36"x36"

W5-3 36"x36"

W6-1 36"x36"
24"x18"

W6-2 36"x36"
24"x18"

W6-3 30"x30"
24"x18"
W6-3-A 36"x36"
24"x18"
W6-3-B 48"x48"
24"x18"

W7-1 30"x30"
24"x18"
W7-1-A 36"x36"
24"x18"

W7-2 24"x18"

W8-1 30"x30"
W8-1-A 36"x36"

W8-2 30"x30"
W8-2-A 36"x36"

W8-3 30"x30"
W8-3-A 36"x36"

W8-4 30"x30"
W8-4-A 36"x36"

W8-5 30"x30"
24"x18"
W8-5-A 36"x36"
24"x18"

W9-1(R) 30"x30"
W9-1(R)-A 36"x36"
W9-1(R)-B 48"x48"

W9-2(L) 36"x36"
W9-2(L)-A 48"x48"

W10-1 36" Diameter

W11-1 30"x30"
24"x18"
W11-1-A 36"x36"
24"x18"

W11-2 30"x30"
24"x18"
W11-2-A 36"x36"
24"x18"

W11-4 30"x30"
24"x18"
W11-4-A 36"x36"
24"x18"

W11-5 30"x30"
24"x18"
W11-5-A 36"x36"
24"x18"

W12-1 24"x24"
W12-1-A 36"x36"
W12-1-B 48"x48"

W12-2(12'-6") 36"x36"
24"x18"

W13-1(25) 18"x18"
W13-1(25)-A 24"x24"

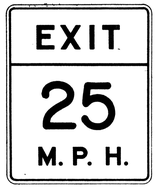

W13-2(25) 48"x60"

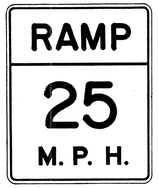

W13-3(25) 48"x60"

W14-1 30"x30"

W14-3 36"x48"x48"

GENERAL NOTES

1. Sign details shall conform to the FHWA publications "Manual on Uniform Traffic Control Devices for Streets and Highways," 1971, and "Standard Highway Signs," 1972, and as amended.
2. All warning signs shall be reflectorized unless otherwise specified.
3. All warning signs shall have 3/8" bolt holes drilled at appropriate locations.
4. Numerals in ( ) indicates numerals to be inserted for sign message. (R) or (L) indicates right or left.
5. Signs prefixed with "CW" on the plans shall indicate orange and black construction signs, and shall be reflectorized.

APPROVAL RECOMMENDED:
Eichi Tanaka 3/17/72
TRAFFIC ENGINEER DATE

APPROVED:
Walter Zadeski 3-20-72
ASSISTANT CHIEF, ENGINEERING DATE

NO.	REVISION	APPROVED BY	DATE
1	Supersedes Sht. DT 102 Approved 12-30-69	H.T.	3/20/72
2	Revised General Note 1	H.T.	10/16/74
3	Revised General Note 5	MF	9-16-75
4	Revised General Note 5	H.T.	9-14-76

STATE OF HAWAII
DEPARTMENT OF TRANSPORTATION
LAND TRANSPORTATION FACILITIES DIVISION

STANDARD DETAILS

WARNING SIGNS

NOT TO SCALE

ORIGINAL PLAN	SURVEY PLOTTED BY	DATE
	DRAWN BY	
	TRACED BY	
NOTE BOOK	DESIGNED BY	
	QUANTITIES BY	
No.	CHECKED BY	

FED. ROAD DIST. NO.	STATE	FED. AID PROJ. NO.	FISCAL YEAR	SHEET NO.	TOTAL SHEETS
HAWAII	HAW.	RDS-050-1(3)	1979	9	19

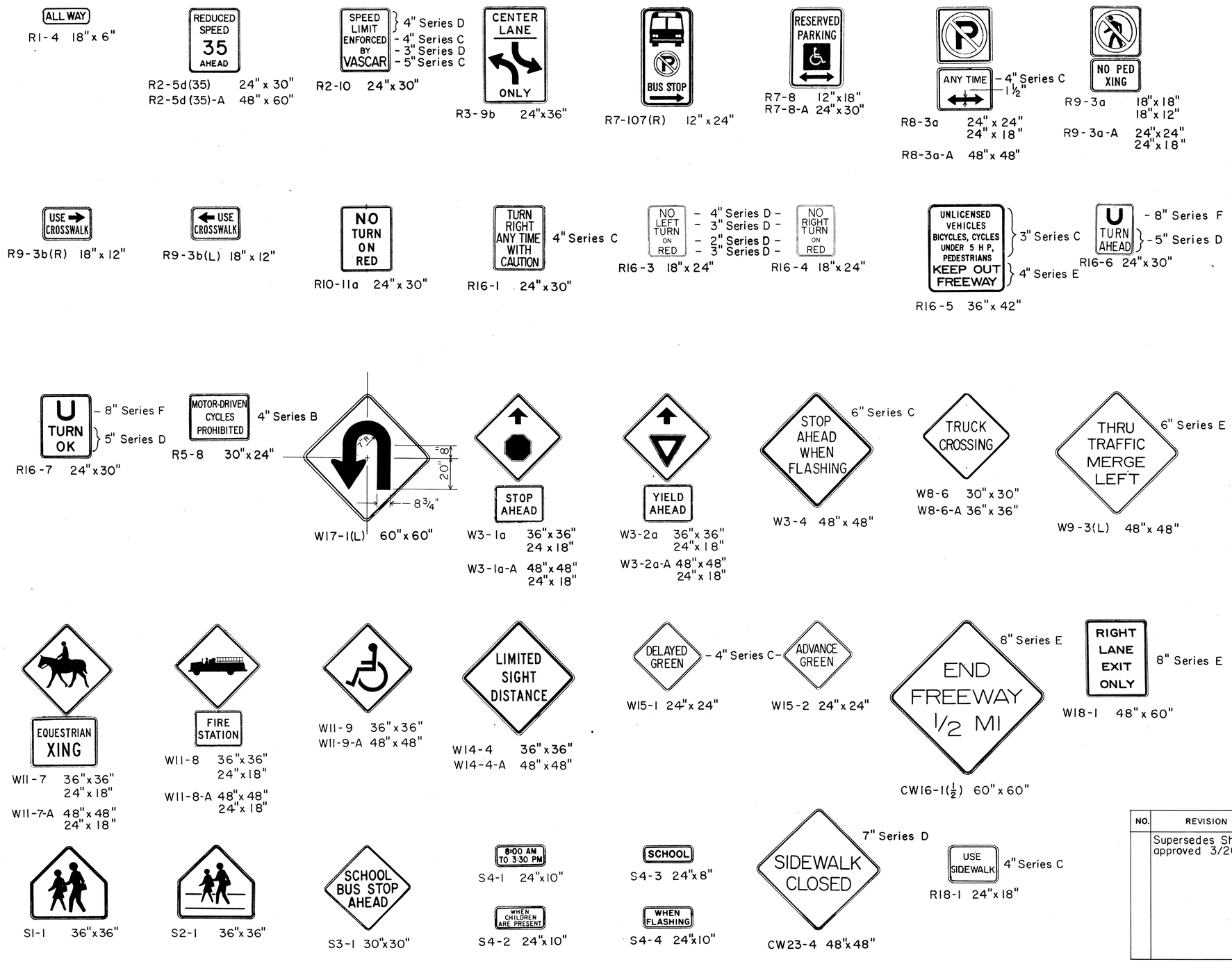

General Notes

1. Sign details shall conform to the latest editions of the following FHWA publications:
   a. "Standard Alphabets for Highway Signs," and as amended.
   b. "Standard Highway Signs," and as amended,
   c. "Manual on Uniform Traffic Control Devices for Streets and Highways," and as amended,
2. All signs shall be reflectorized with reflective sheeting, unless otherwise specified.
3. All signs shall have 3/8" bolt holes drilled at appropriate locations.
4. Numerals in ( ) indicate numerals to be inserted for sign message. (R) or (L) indicates right or left.
5. Signs prefixed with "CW" on the plans shall indicate orange and black construction signs, and shall be reflectorized with reflective sheeting.

APPROVAL RECOMMENDED:
Eiichi Tanaka — TRAFFIC ENGINEER — 5/2/78 DATE

APPROVED:
Herbert Y. Takeishi — ASSISTANT CHIEF, ENGINEERING — 5/3/78 DATE

NO.	REVISION	APPROVED BY	DATE
	Supersedes Sht. DT103 approved 3/20/72	H.T.	5/3/78

STATE OF HAWAII
DEPARTMENT OF TRANSPORTATION
LAND TRANSPORTATION FACILITIES DIVISION

STANDARD DETAILS

MISCELLANEOUS SIGNS

NOT TO SCALE — DATE: MAY, 1978

SHEET No. 5 OF 15 SHEETS DT 103

ORIGINAL PLAN — SURVEY PLOTTED BY — DRAWN BY — TRACED BY — DESIGNED BY — QUANTITIES BY — CHECKED BY — DATE — NOTE BOOK No.

FED. ROAD DIST. NO.	STATE	FED. AID PROJ. NO.	FISCAL YEAR	SHEET NO.	TOTAL SHEETS
HAWAII	HAW.	(205-050-1(8))	1979	10	10

CW20-1a 48"x48"

CW20-2d 48"x48"

CW20-3b 48"x48"

CW20-4d 48"x48"

CW20-5d(L) 48"x48"

CW20-7c 48"x48"

CW21-1 30"x30"

CW21-2 30"x30"

CW21-3 36"x36"

CW21-4 36"x36"

CW21-5 30"x30"

CW21-6 30"x30"

CW22-1b 48"x48"

CW22-2 42"x36"

CW22-3 42"x36"

CG20-1(5) 60"x36"

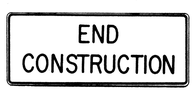

CG20-2 60"x24"

CM4-9(R) 30"x24"

CM4-10(R) 48"x18"

CG20-4 36"x18"

CW23-1 36"x36"

CW23-2b 48"x48"

CW23-3(R) 48"x48"

GENERAL NOTES

1. Sign details shall conform to the FHWA publications "Manual on Uniform Traffic Control Devices for Streets and Highways," 1971, and "Standard Highway Signs," 1972, and as amended.
2. All construction signs shall be reflectorized.
3. All construction signs shall have 3/8" bolt holes drilled at appropriate locations.
4. Numerals in ( ) indicates numerals to be inserted for sign message. (R) or (L) indicates right or left.
5. For "CW" series signs, suffixes a,b,c and d are as follows: a-1500 FT, b-1000 FT, c-500 FT and d-AHEAD.

APPROVAL RECOMMENDED:
Euichi Tanaka 3/21/72
TRAFFIC ENGINEER DATE

APPROVED:
Walter Zaleski 3/23/72
ASSISTANT CHIEF, ENGINEERING DATE

NO.	REVISION	APPROVED BY	DATE
1	Supersedes Sht. DT 104 Approved 12-30-69	H.T.	3/23/72
2	Revised General Note 1	H.T.	10/10/74
3	Revised General Note 2	MH	9-16-75
4	Revised General Note 2 and sign CG20-1(5)	H.P.	9-14-76

STATE OF HAWAII
DEPARTMENT OF TRANSPORTATION
LAND TRANSPORTATION FACILITIES DIVISION

STANDARD DETAILS

CONSTRUCTION SIGNS

NOT TO SCALE

SHEET No. 6 OF 15 SHEETS DT 104

ORIGINAL PLAN | SURVEY PLOTTED BY | DRAWN BY | TRACED BY | DESIGNED BY | QUANTITIES BY | CHECKED BY | DATE | NOTE BOOK No.

IMPERIAL LA 3207

FED. ROAD DIST. NO.	STATE	FED. AID PROJ. NO.	FISCAL YEAR	SHEET NO.	TOTAL SHEETS
HAWAII	HAW.	R05-050-1(8)	1979	11	19

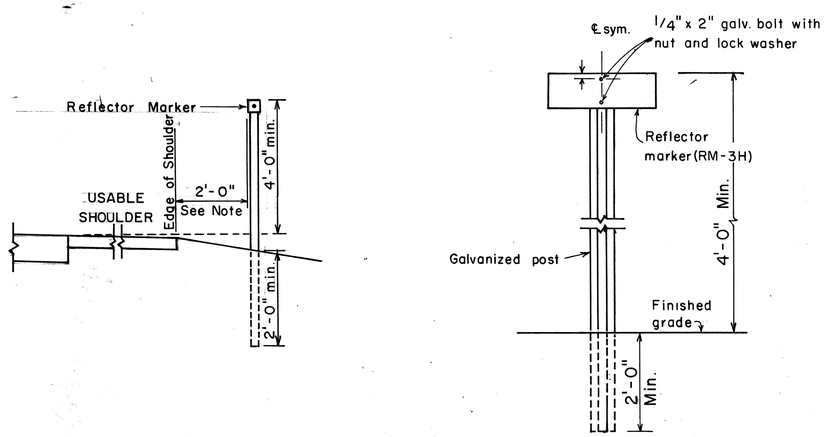

REFLECTOR MARKER MOUNTING DETAIL

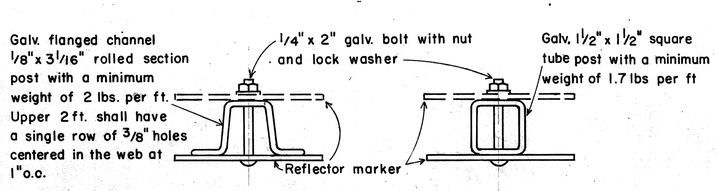

TYPICAL SECTION OF ROAD DELINEATOR

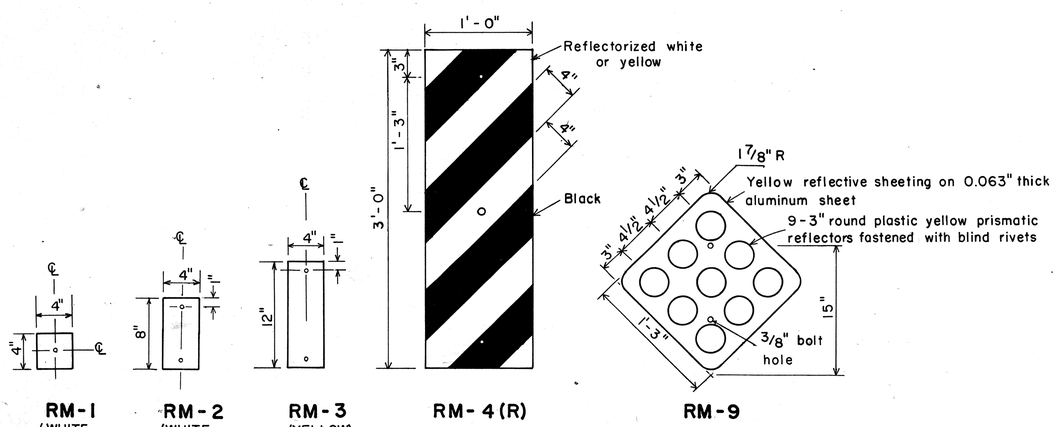

RM-1 (WHITE, YELLOW, OR RED) **RM-2** (WHITE, YELLOW, OR RED) **RM-3** (YELLOW) **RM-4 (R)** **RM-9**

REFLECTOR MARKERS

GENERAL NOTES:

1. Clearance markers (RM-3, RM-4) shall be installed with the edge of the marker in line with the inner edge of the obstruction.
2. (R) or (L) indicates right or left and shall be as shown on the plans.
3. Reflector markers RM-1 and RM-2 shall be:
   a) Yellow if placed along the left edge of divided roadways, one-way roadways, and ramps in the direction of travel.
   b) White if placed along the right edge of divided roadways, one-way roadways, and ramps in the direction of travel.
4. For reflector marker RM-9, reflective sheeting material may be used as an alternate.
5. For RM-4, the stripes shall slope downward at an angle of 45° in the direction of traffic.

APPROVAL RECOMMENDED:
Euichi Tanaka — 11/7/77
TRAFFIC ENGINEER — DATE

APPROVED:
Herbert Q. Takeishi — 11/15/77
ASSISTANT CHIEF, ENGINEERING — DATE

NO.	REVISION	APPROVED BY	DATE

STATE OF HAWAII
DEPARTMENT OF TRANSPORTATION
LAND TRANSPORTATION FACILITIES DIVISION

STANDARD DETAILS

MISCELLANEOUS REFLECTOR MARKERS

Not to scale — June, 1977

SHEET No. 7 OF 15 SHEETS DT 110

ORIGINAL PLAN		DATE
	SURVEY PLOTTED BY	
	DRAWN BY	
	TRACED BY	
	DESIGNED BY	
NOTE BOOK	QUANTITIES BY	
No.	CHECKED BY	

11

FED. ROAD DIST. NO.	STATE	FED. AID PROJ. NO.	FISCAL YEAR	SHEET NO.	TOTAL SHEETS
HAWAII	HAW.	R050-050-1(3)	1979	12	19

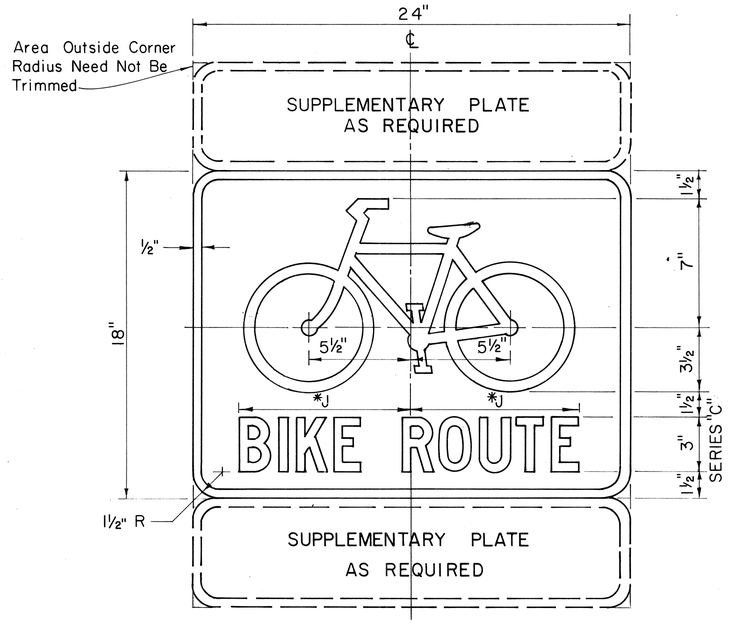

D11-1

BIKE ROUTE SIGN

Scale: 3" = 1'-0"

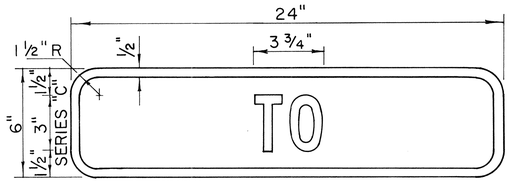

D11-2

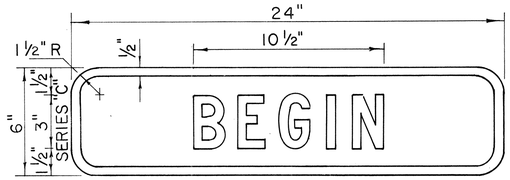

D11-3

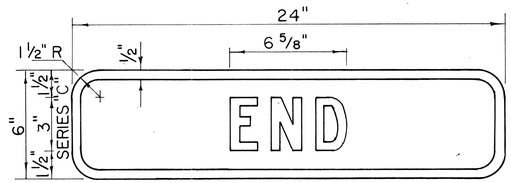

D11-4

GENERAL NOTES
BIKE ROUTE SIGN & SUPPLEMENTARY PLATES

1. Sign details shall conform to the latest edition of the following FHWA publications: "Manual on Uniform Traffic Control Devices for Streets and Highways", "Standard Highway Signs" and "Standard Alphabets for Highway Signs" and as amended.
2. Legend and borders shall be white (reflectorized) on a green (reflectorized) background.
3. Drill 3/8" ϕ bolt holes (for mounting) at appropriate locations.
4. When Supplementary Plates (D11-2 to D11-6 only) are required with Bike Route Sign (D11-1 or Alternate), the Sign Assembly shall be mounted on a single metal plate (24" x 24" or 24" x 30") and shall be arranged as shown on the plans.

*5. Alternate sign messages shall be denoted by the following:

D11-1a: Bike Lane
D11-1b: Bike Path
D11-1c: Bikeway

Dimension "J" varies. Visually center Alternate message.

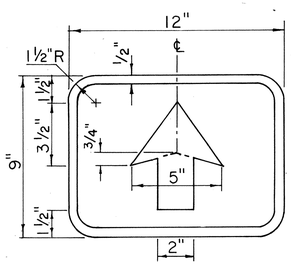

D11-7

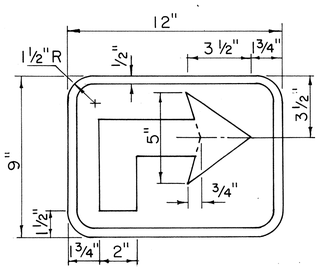

D11-8(R)

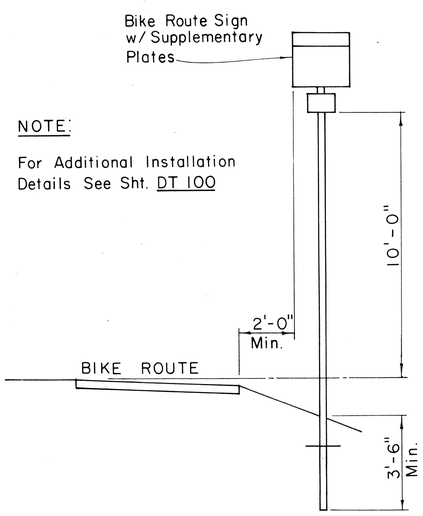

NOTE:

For Additional Installation Details See Sht. DT 100

TYPICAL INSTALLATION

Scale: 3/8" = 1'-0"

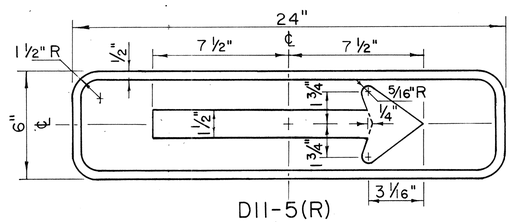

D11-5(R)

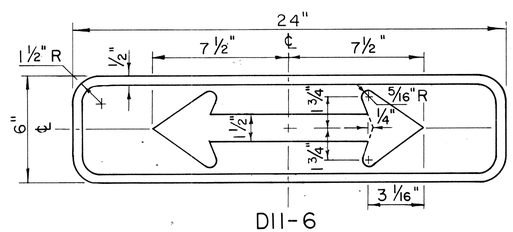

D11-6

SUPPLEMENTARY PLATES

Scale: 3" = 1'-0"

APPROVAL RECOMMENDED:

Eichi Tanaka — TRAFFIC ENGINEER — 11/7/77 DATE

APPROVED:

Herbert Sakai — ASSISTANT CHIEF, ENGINEERING — 11/7/77 DATE

NO.	REVISION	APPROVED BY	DATE

STATE OF HAWAII
DEPARTMENT OF TRANSPORTATION
LAND TRANSPORTATION FACILITIES DIVISION

STANDARD DETAILS
BIKE ROUTE SIGN
& SUPPLEMENTARY PLATES

Scale: As Shown — June 1977

SHEET No. 8 OF 15 SHEETS DT 114

ORIGINAL PLAN — SURVEY PLOTTED BY — DRAWN BY — TRACED BY — DESIGNED BY — QUANTITIES BY — CHECKED BY — DATE — NOTE BOOK — No.

FED. ROAD DIST. NO.	STATE	FED. AID PROJ. NO.	FISCAL YEAR	SHEET NO.	TOTAL SHEETS
HAWAII	HAW.	X05-050-1(19)	1970	13	19

TWO - LANE

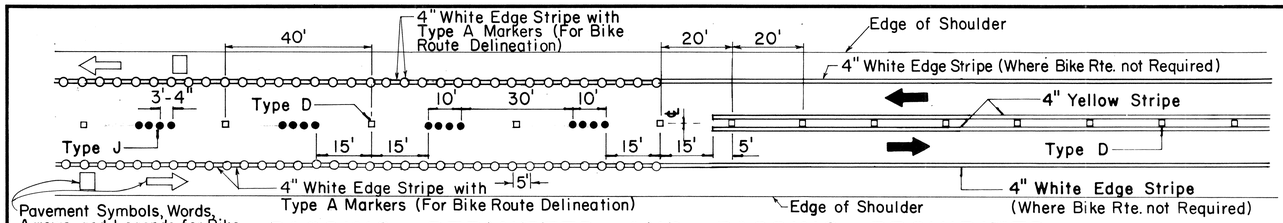

PASSING PERMITTED AND PASSING PROHIBITED

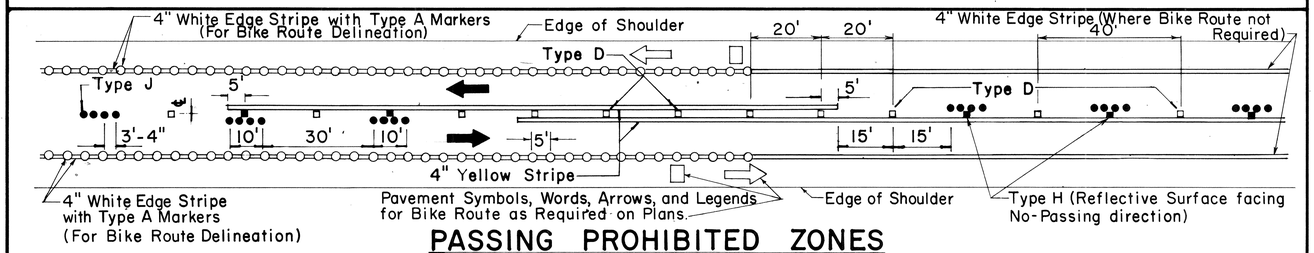

PASSING PROHIBITED ZONES

MULTI - LANE

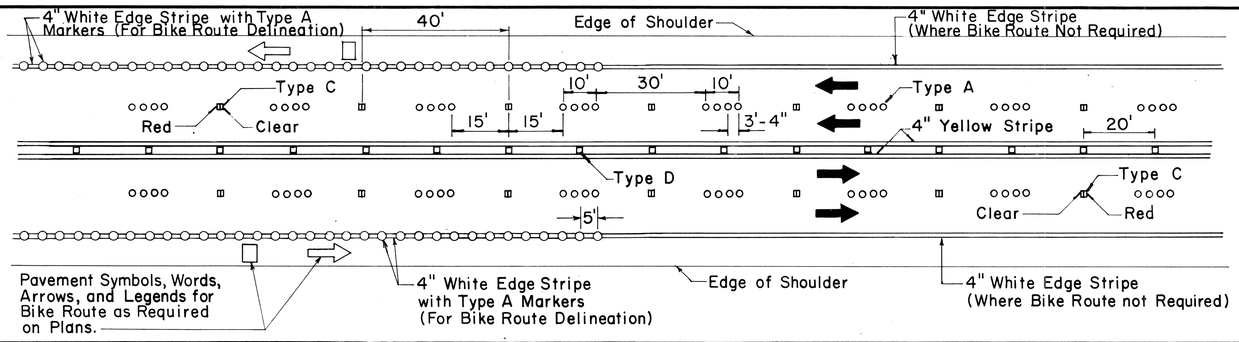

DIVIDED HIGHWAY AND FREEWAY

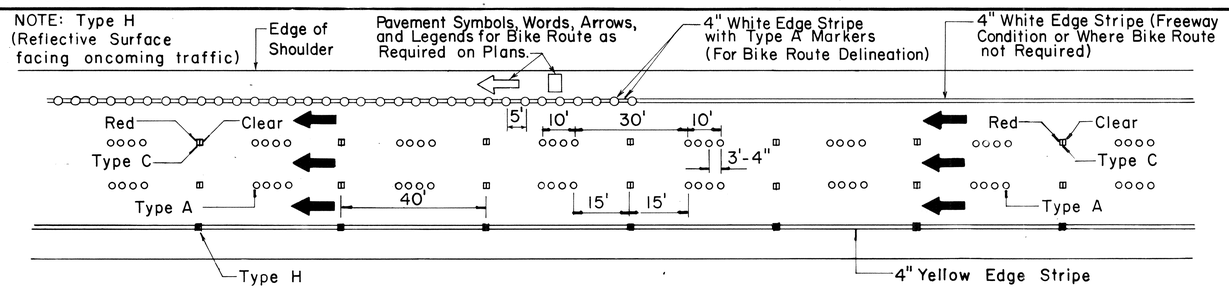

MISCELLANEOUS

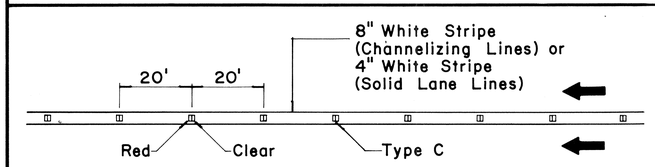

CHANNELIZING LINES OR SOLID LANE LINES

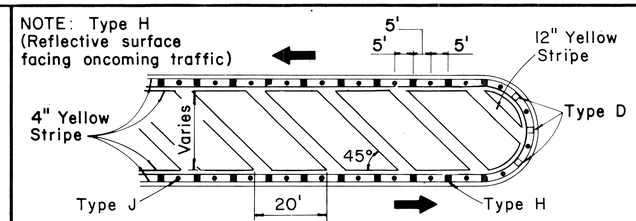

MEDIAN NOSE DELINEATION

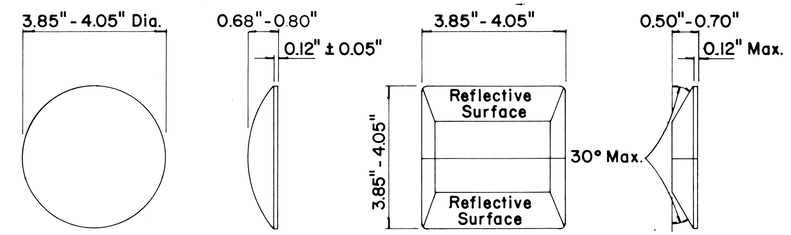

TYPE A
NON-REFLECTIVE WHITE MARKER

TYPE C
RED-CLEAR REFLECTIVE MARKER

TYPE J
NON-REFLECTIVE YELLOW MARKER

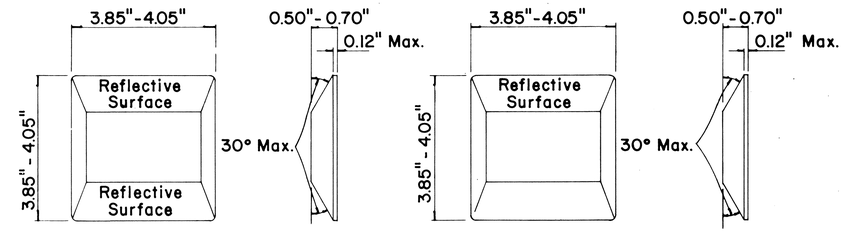

TYPE D
TWO-WAY YELLOW REFLECTIVE MARKER

TYPE H
ONE-WAY YELLOW REFLECTIVE MARKER

GENERAL NOTES

1. Pavement marking and striping shall conform to the latest "Manual on Uniform Traffic Control Devices for Streets and Highways," and as amended.

2. Layout and installation of pavement marking and striping shall be done by the Contractor. The Contractor shall check the layouts with the Engineer prior to performing work.

LEGEND

- ○ Type A
- ⊡ Type C
- □ Type D
- ■ Type H
- ● Type J

APPROVAL RECOMMENDED:

Eiichi Tanaka — 7/21/78
TRAFFIC ENGINEER — DATE

APPROVED:

Herbert T. Takeishi — 1/24/78
ASSISTANT CHIEF, ENGINEERING — DATE

No.	REVISION	APPROVED BY	DATE
1	Supercedes DT 300 approved 11/18/71.	H.T.	1/24/78

STATE OF HAWAII
DEPARTMENT OF TRANSPORTATION
LAND TRANSPORTATION FACILITIES DIVISION

STANDARD DETAILS
RAISED PAVEMENT MARKERS AND STRIPING

Not to Scale — July 1978

SHEET No. 9 OF 15 SHEETS DT 300

ORIGINAL PLAN	SURVEY PLOTTED BY	DRAWN BY	TRACED BY	DESIGNED BY	NOTE BOOK	QUANTITIES BY	No.	CHECKED BY	DATE

K+E IMPERIAL LA 3207

FED. ROAD DIST. NO.	STATE	FED. AID PROJ. NO.	FISCAL YEAR	SHEET NO.	TOTAL SHEETS
HAWAII	HAW.	R05-050-(13)	1979	14	15

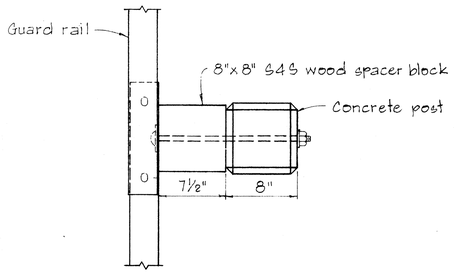

PLAN

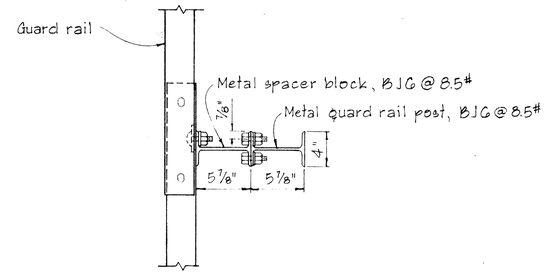

PLAN

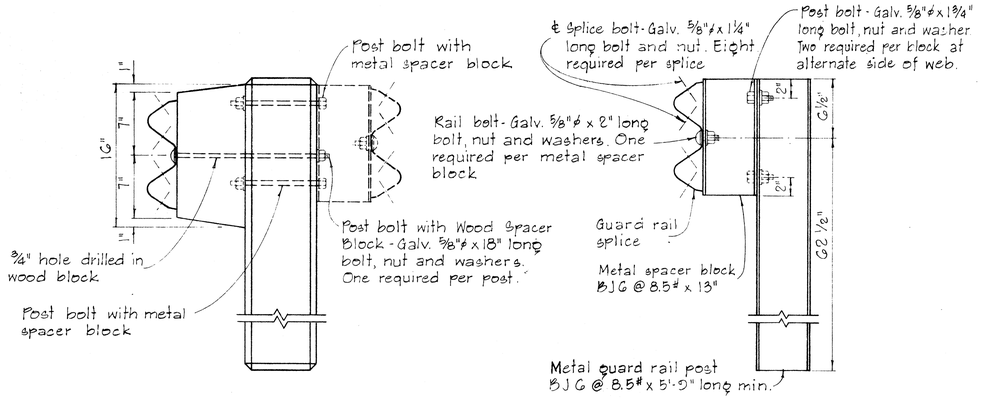

SINGLE METAL GUARD RAIL ON METAL POST WITH METAL SPACER BLOCK

SCALE: 1½" = 1'-0"

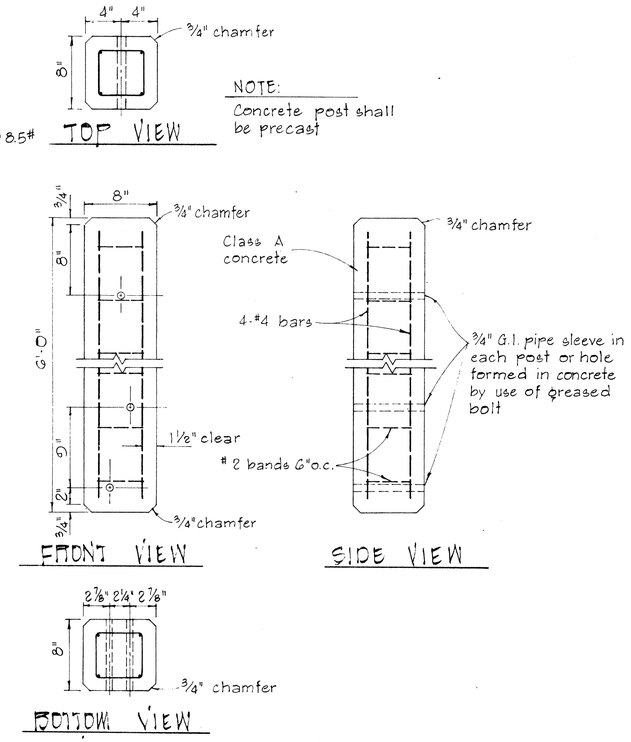

DETAIL OF CONCRETE POST

SCALE: 1½" = 1'-0"

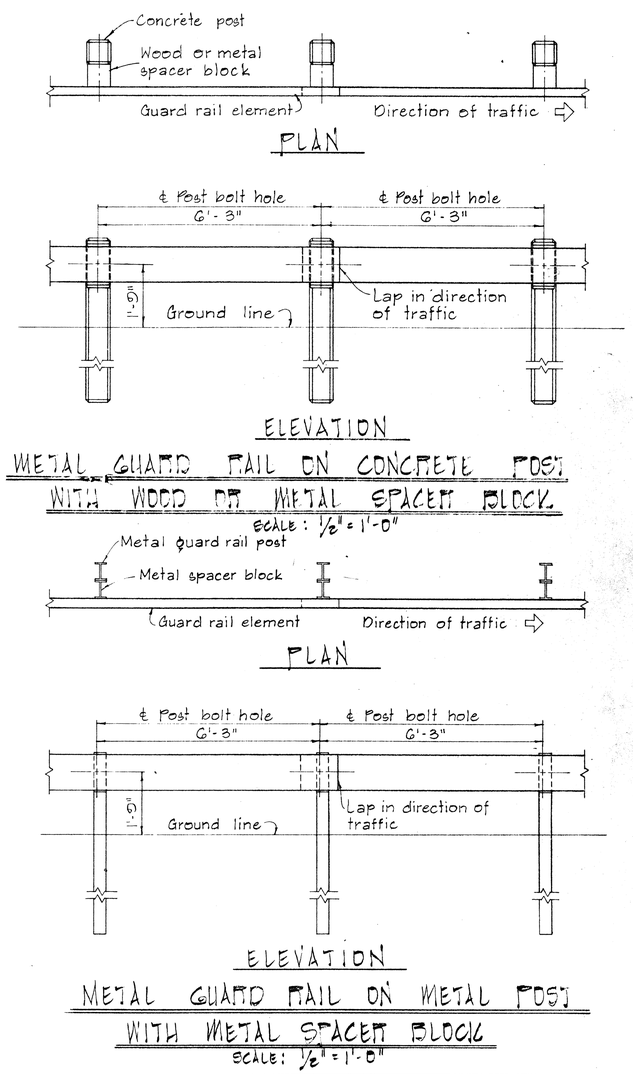

METAL GUARD RAIL ON CONCRETE POST WITH WOOD OR METAL SPACER BLOCK

SCALE: ½" = 1'-0"

METAL GUARD RAIL ON METAL POST WITH METAL SPACER BLOCK

SCALE: ½" = 1'-0"

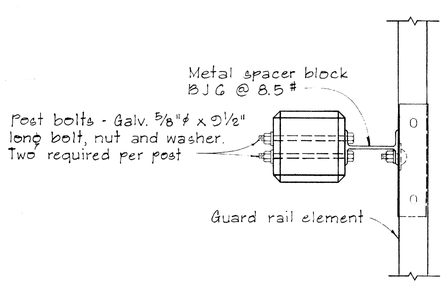

PLAN

SINGLE METAL GUARD RAIL ON PRECAST CONCRETE POST WITH WOOD OR METAL SPACER BLOCK

SCALE: 1½" = 1'-0"

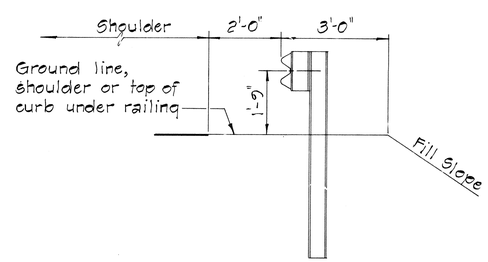

AT SHOULDER SECTION

TYPICAL METAL GUARD RAIL DETAIL

SCALE: ½" = 1'-0"

APPROVAL RECOMMENDED:
Eiichi Tanaka — TRAFFIC ENGINEER — 12/23/63 DATE

APPROVED:
Hubert G. Schenk — ASSISTANT CHIEF, ENGINEERING — 12-30-69 DATE

NO.	REVISION	APPROVED BY	DATE

STATE OF HAWAII
DEPARTMENT OF TRANSPORTATION
LAND TRANSPORTATION FACILITIES DIVISION

STANDARD DETAILS

METAL GUARD RAIL

SCALE: AS SHOWN — NOV. 1968

SHEET No. 10 OF 15 SHEETS — DT 500

ORIGINAL PLAN — SURVEY PLOTTED BY / DRAWN BY / TRACED BY / DESIGNED BY / QUANTITIES BY / CHECKED BY — DATE — NOTE BOOK No.

PRINTED ON NO. 1000H CLEARPRINT

FED. ROAD DIST. NO.	STATE	FED. AID PROJ. NO.	FISCAL YEAR	SHEET NO.	TOTAL SHEETS
HAWAII	HAW.	R06-050-1(3)	1970	15	19

BOLT DIMENSIONS		
TYPE A BOLT	D	L
Splice Bolt	5/16"	1 1/4"
Post Bolt for Conc. Post w/ Double Wood Blocks	3/32"	24"
Post Bolt for Conc. Post w/ Single Wood Block	3/32"	18"
Rail Bolt for Metal Block	3/32"	2"

BOLT DIMENSIONS	
TYPE B BOLT	L
Post Bolt for Conc. Post w/ Metal Blocks	9 1/2"
Post Bolt for Metal Post w/ Metal Block	1 3/4"

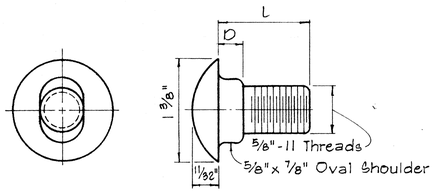

TYPE A BOLT

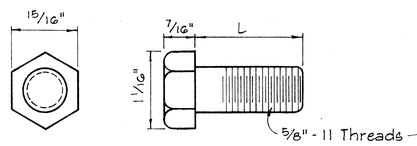

TYPE B BOLT

SPLICE RAIL AND POST BOLTS

Scale: Full Size

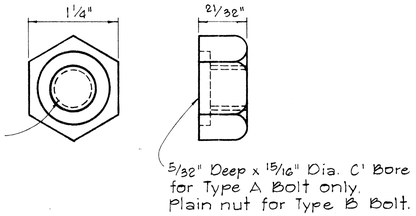

HEXAGON NUT

Scale: Full Size

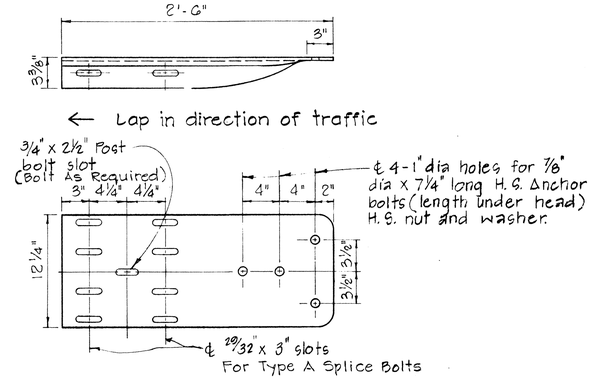

SPECIAL END SHOE

Scale: 1 1/2" = 1'-0"

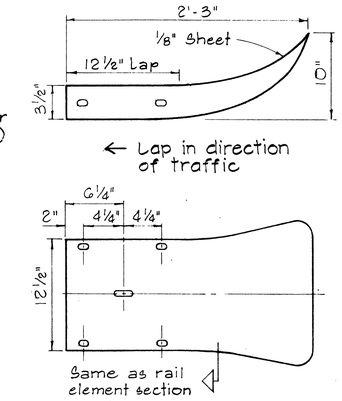

FLARED END

Scale: 1 1/2" = 1'-0"

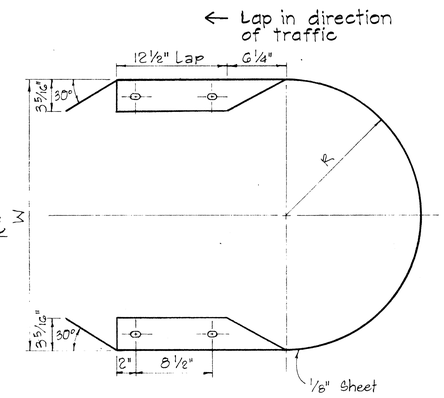

← Lap in direction of traffic

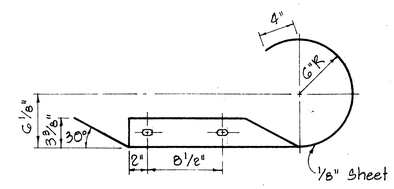

← Lap in direction of traffic

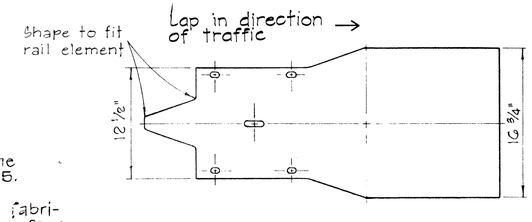

MEDIAN END

Scale: 1 1/2" = 1'-0"

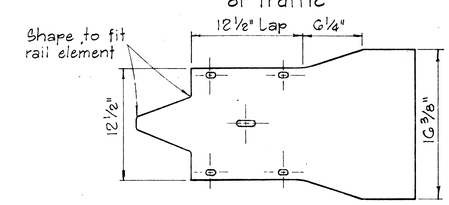

CURVED END

Scale: 1 1/2" = 1'-0"

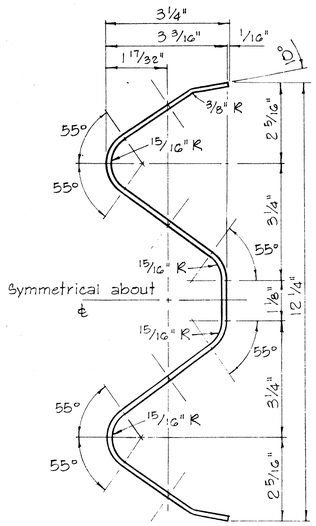

RAIL ELEMENT SECTION

Scale: 6" = 1'-0"

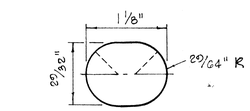

SPLICE BOLT SLOT

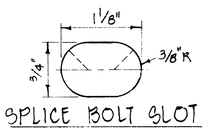

SPLICE BOLT SLOT FOR ALL ENDS

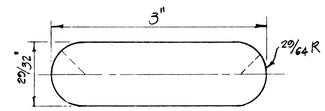

SPLICE BOLT SLOT FOR SPECIAL END SHOE

Scale: Full Size

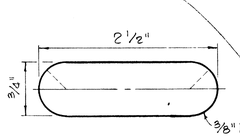

POST BOLT SLOT

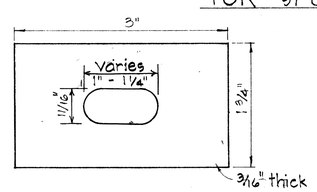

RAIL WASHER

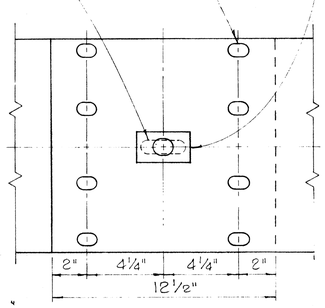

RAIL SPLICE

Scale: 3" = 1'-0"

NOTES:

1. H.S. Bolts shall conform to the requirements of ASTM A 325.
2. Special End Shoe shall be fabricated from 10 Gage steel conforming to the requirements of AASHO 180.

MEDIAN END DIMENSIONS		
TYPE OF POST AND BLOCK	W	R
Double Metal Guard Rail on Concrete Post with Wood Blocks	29 3/4"	14 7/8"
Double Metal Guard Rail on Concrete Post with Metal Blocks (BJG)	26 1/2"	13 1/4"
Double Metal Guard Rail on Metal Post with Metal Blocks (BJG)	24 3/8"	12 3/16"

NO	REVISION	APPROVED BY	DATE
1	Revised Hole Size for Rectangular Rail Washer	H.T.	8/10/77

APPROVAL RECOMMENDED:

Eiichi Tanaka — 12/29/69
TRAFFIC ENGINEER — DATE

APPROVED:

Hulu G. Bidal — 12-30-69
ASSISTANT CHIEF, ENGINEERING — DATE

STATE OF HAWAII
DEPARTMENT OF TRANSPORTATION
LAND TRANSPORTATION FACILITIES DIVISION

STANDARD DETAILS
METAL GUARD RAIL

Scale: As Noted — August, 1968

SHEET No. 11 OF 15 SHEETS — DT 501

ORIGINAL PLAN	SURVEY PLOTTED BY	DATE
	DRAWN BY	
	TRACED BY	
NOTE BOOK	DESIGNED BY	
	QUANTITIES BY	
No.	CHECKED BY	

PRINTED ON NO. 1000H CLEARPRINT

FED. ROAD DIST. NO.	STATE	FED. AID PROJ. NO.	FISCAL YEAR	SHEET NO.	TOTAL SHEETS
HAWAII	HAW.	R09-050-1(3)	1970	16	19

NOTE:

1. Metal guard rail connection to structures requires End Post Connection. See structure plans.
2. For detail of Breakaway Cable Terminal (BCT) See Sheet No. DT 519

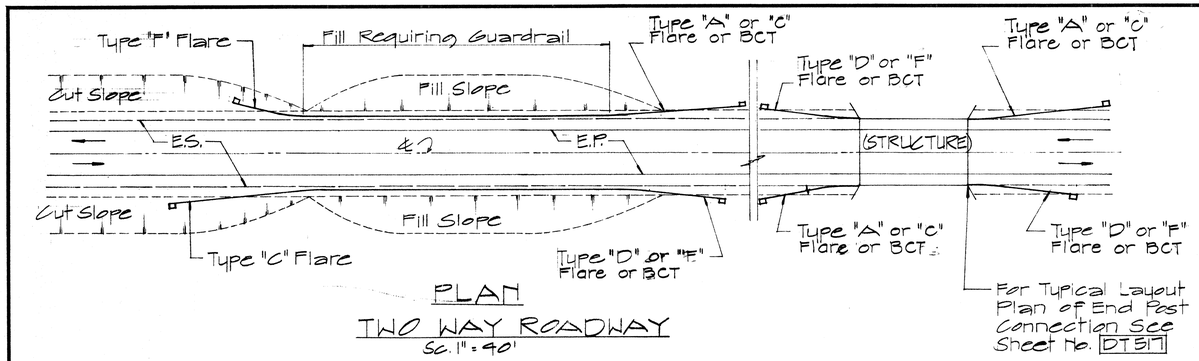

PLAN

TWO WAY ROADWAY

Sc. 1" = 40'

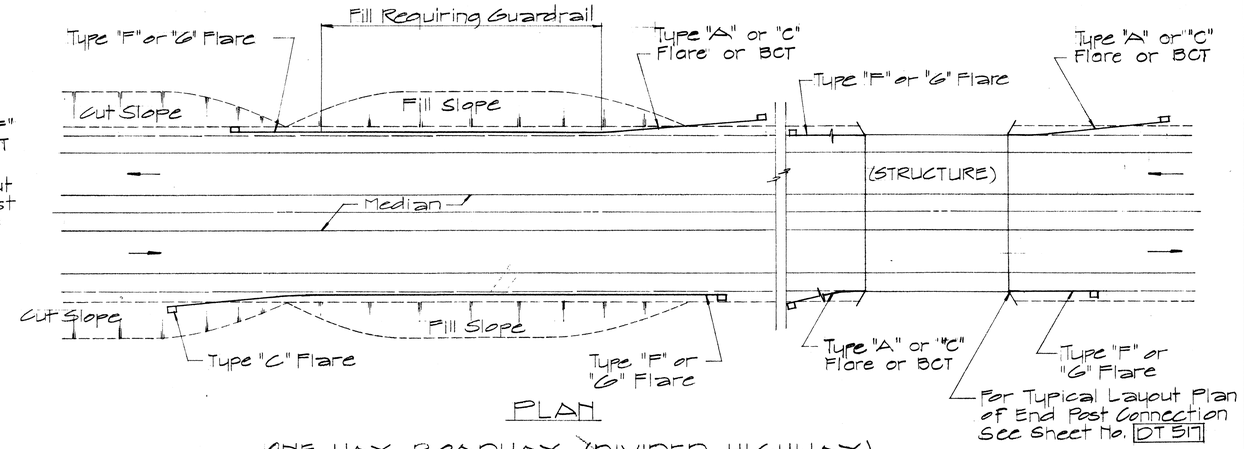

PLAN

ONE WAY ROADWAY (DIVIDED HIGHWAY)

Sc. 1" = 40'

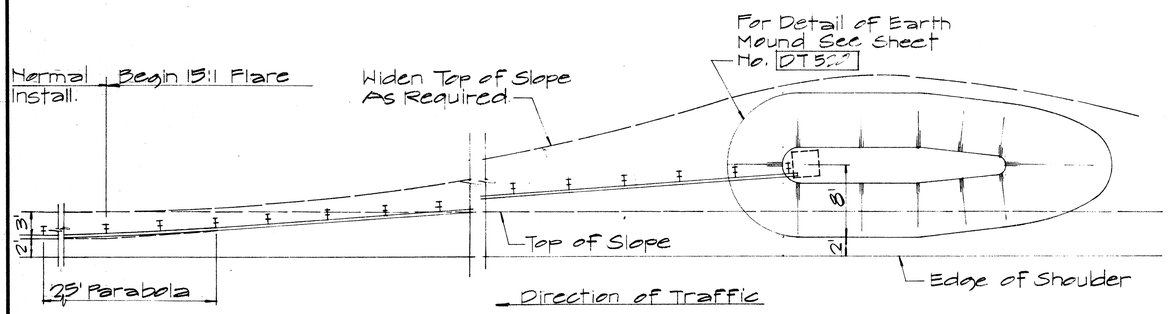

PLAN

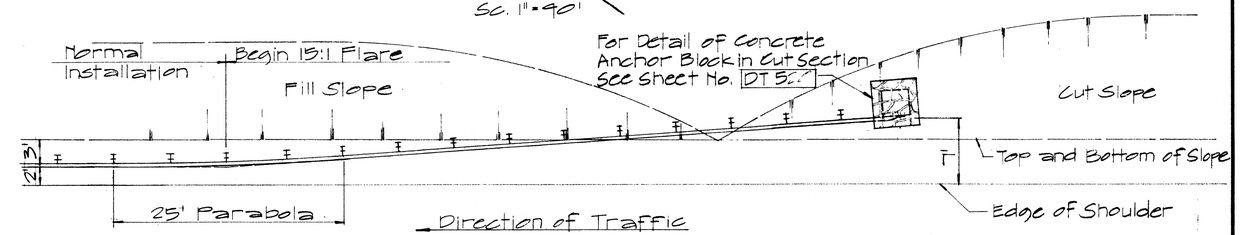

PLAN

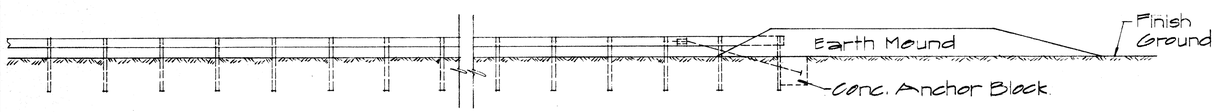

ELEVATION

TYPE "A" FLARE

Sc. 1/8" = 1'-0"

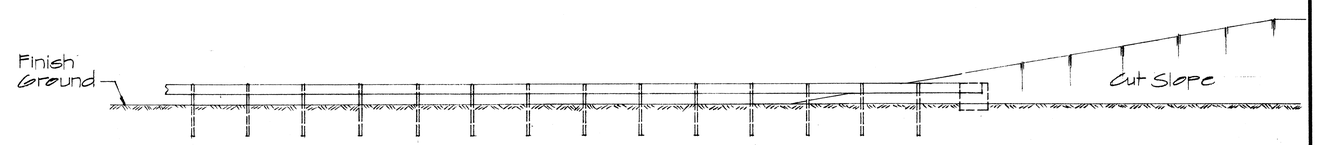

ELEVATION

TYPE "C" FLARE

Sc. 1/8" = 1'-0"

APPROVAL RECOMMENDED:

Eiichi Tanaka — TRAFFIC ENGINEER — 12/29/69 DATE

APPROVED:

[signature] — ASSISTANT CHIEF, ENGINEERING — 12-30-69 DATE

NO.	REVISION	APPROVED BY	DATE
1	Delete Type "B" Flare and Type "E" Flare	H.T.	6/15/78

STATE OF HAWAII
DEPARTMENT OF TRANSPORTATION
LAND TRANSPORTATION FACILITIES DIVISION

STANDARD DETAILS OF APPROACH END FLARE - ONE & TWO WAY ROADWAY

Sc. As Noted — April 1969

SHEET No. 12 OF 15 SHEETS | DT 516

ORIGINAL PLAN	SURVEY PLOTTED BY	DATE
	DRAWN BY	"
	TRACED BY	"
NOTE BOOK	DESIGNED BY	"
	QUANTITIES BY	"
No.	CHECKED BY	"

PRINTED ON NO. 1000H CLEARPRINT

FED. ROAD DIST. NO.	STATE	FED. AID PROJ. NO.	FISCAL YEAR	SHEET NO.	TOTAL SHEETS
HAWAII	HAW.	R09-050-1(3)	1970	17	19

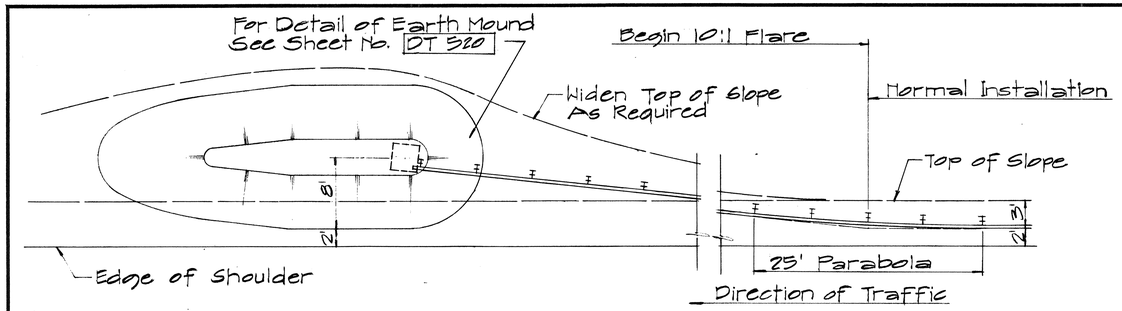

PLAN

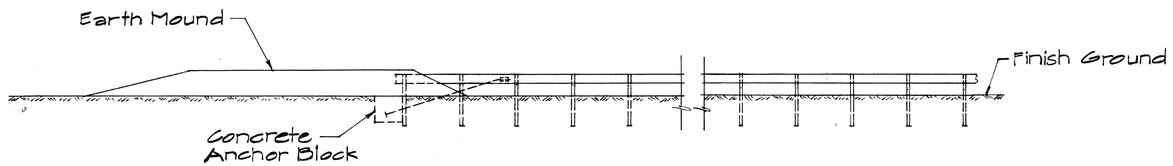

ELEVATION

TYPE "D" FLARE

Sc. 1/8" = 1'-0"

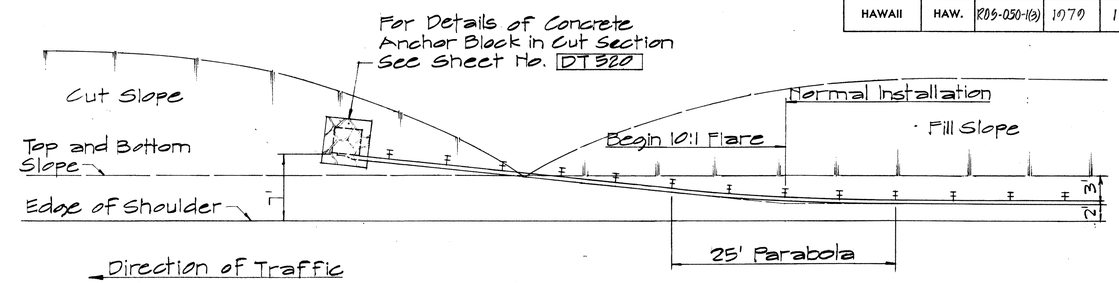

PLAN

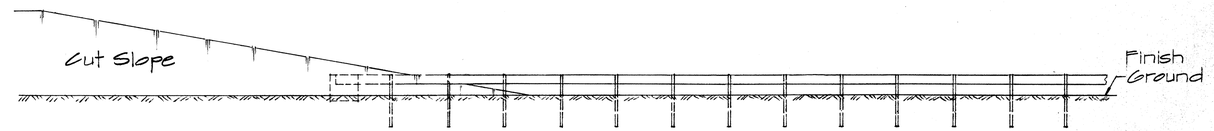

ELEVATION

TYPE "F" FLARE

Sc. 1/8" = 1'-0"

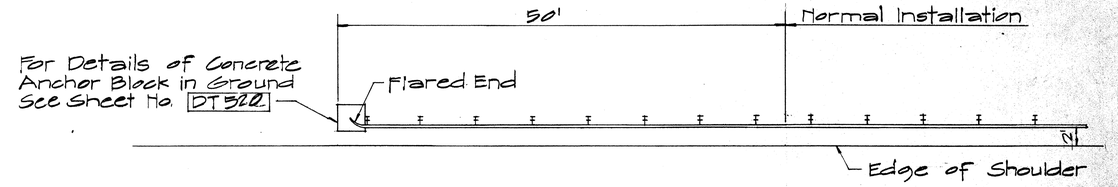

PLAN

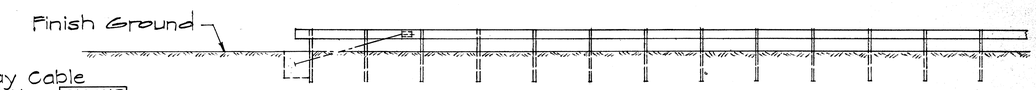

ELEVATION

TYPE "G" FLARE

Sc. 1/8" = 1'-0"

NOTE:

For detail of Breakaway Cable Terminal (BCT) See Sheet No. DT 519

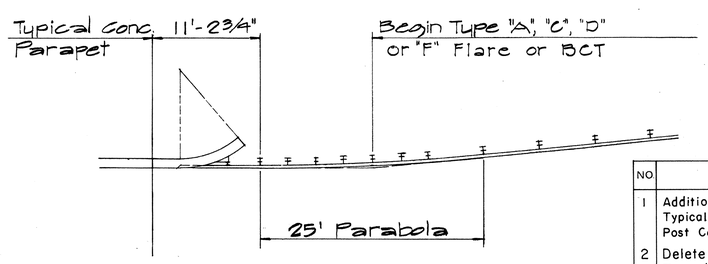

TYPICAL LAYOUT PLAN OF END POST CONNECTION

Sc. 1/8" = 1'-0"

APPROVAL RECOMMENDED:

Eiichi Tanaka — 12/29/69
TRAFFIC ENGINEER — DATE

APPROVED:

[illegible] — 12-30-69
ASSISTANT CHIEF, ENGINEERING — DATE

NO	REVISION	APPROVED BY	DATE
1	Additional Posts Added to Typical Layout Plan Of End Post Connection	H.C.	4-12-72
2	Delete Type "B" Flare and Type "E" Flare	H.C.	6-15-78

STATE OF HAWAII
DEPARTMENT OF TRANSPORTATION
LAND TRANSPORTATION FACILITIES DIVISION

STANDARD DETAILS TRAILING END FLARE - ONE & TWO WAY ROADWAY

Scale: As Noted — April 1969

SHEET No. 13 OF 15 SHEETS — DT 517

ORIGINAL PLAN	SURVEY PLOTTED BY	DATE
	TRACED BY	
	DESIGNED BY	
NOTE BOOK	QUANTITIES BY	
No.	CHECKED BY	

PRINTED ON NO. 1000H CLEARPRINT

FED. ROAD DIST. NO.	STATE	FED. AID PROJ. NO.	FISCAL YEAR	SHEET NO.	TOTAL SHEETS
HAWAII	HAW.	R09-050-1(3)	1970	18	19

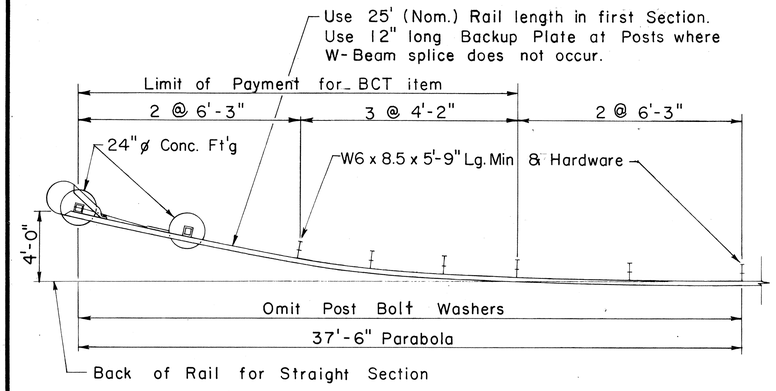

PLAN
Scale: 1/4" = 1'-0"

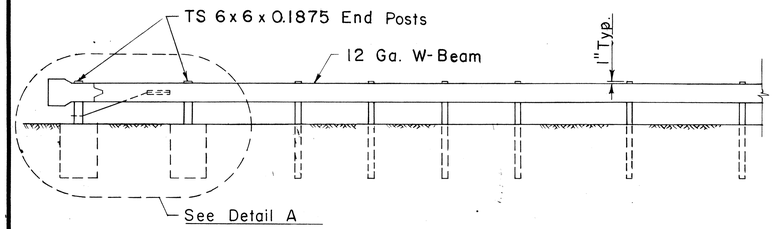

ELEVATION
Scale: 1/4" = 1'-0"

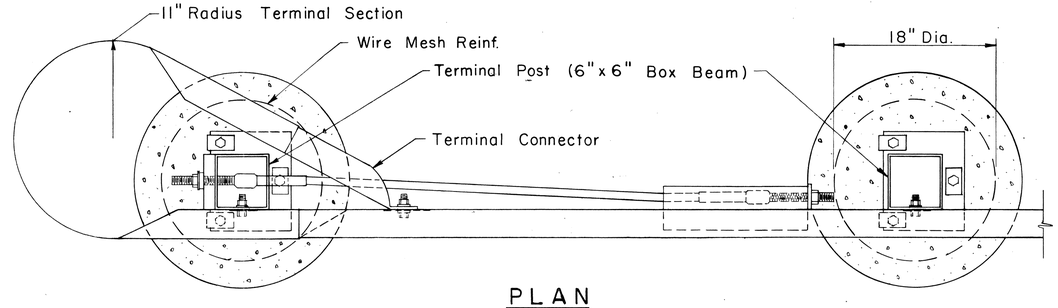

PLAN

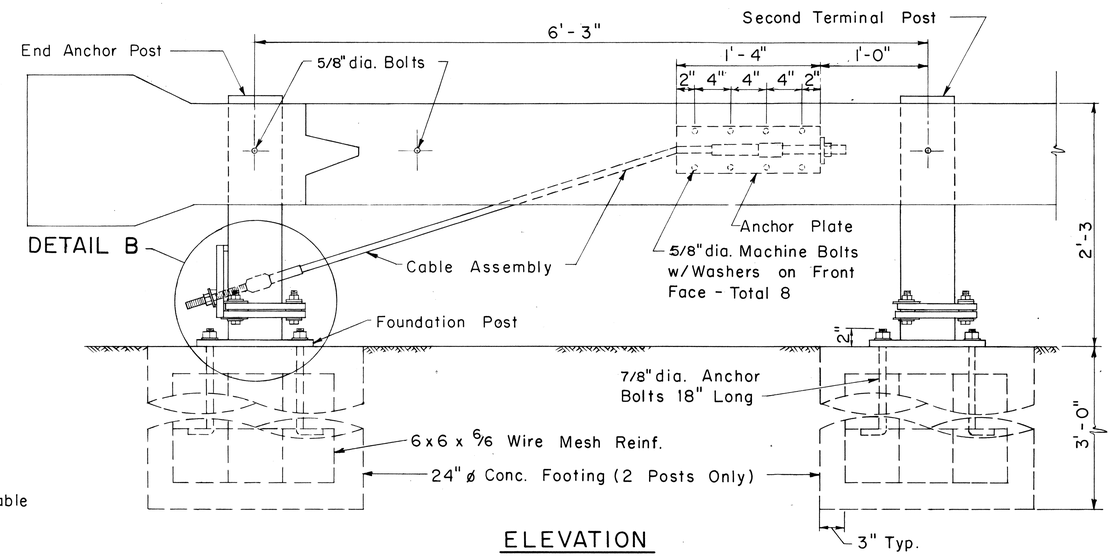

ELEVATION
DETAIL A
Scale: 1 1/2" = 1'-0"

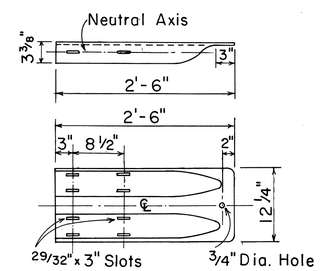

TERMINAL CONNECTOR
Scale: 1" = 1'-0"

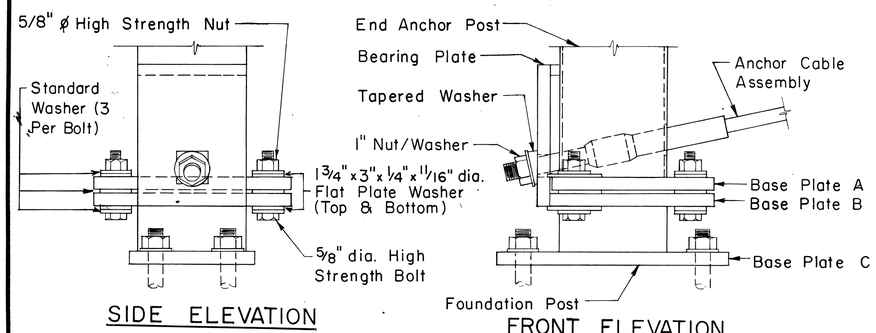

SIDE ELEVATION

FRONT ELEVATION

DETAIL B

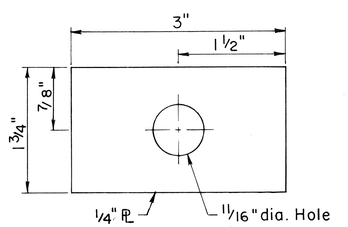

FLAT PLATE WASHER
Scale: Full Size

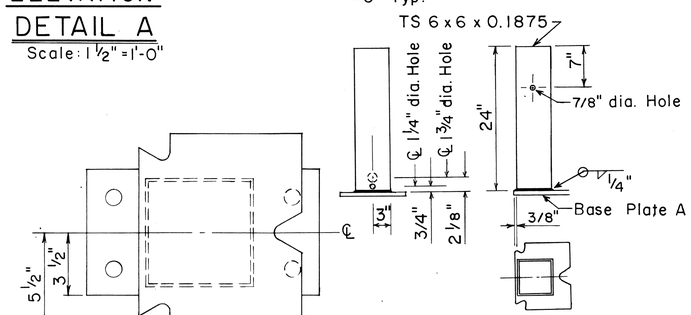

TERMINAL POST
Scale: 1" = 1'-0"

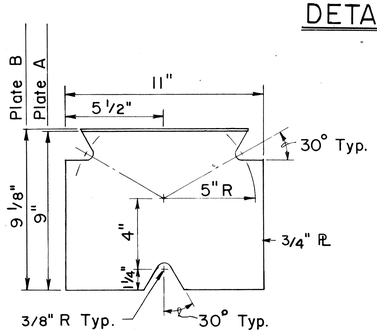

BASE PLATES A & B
Scale: 3" = 1'-0"

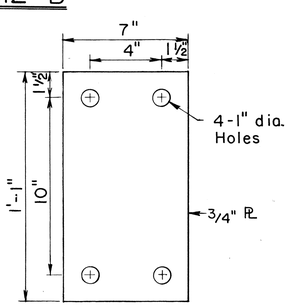

BASE PLATE C
Scale: 3" = 1'-0"

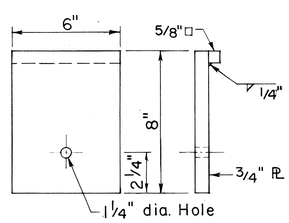

BEARING PLATE
Scale: 3" = 1'-0"

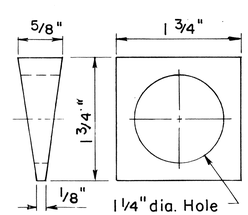

TAPERED WASHER
Scale: Full Size

FOUNDATION POST
Scale: 3" = 1'-0"

NOTES:

1. Anchor Plate and Anchor Cable Assembly (Standard Swaged Fitting and Stud). See Standard Detail Sheet No. DT 520.
2. Other Anchor Cable Assemblies may be used. Minimum breaking strength of assembly should be 40,000 lbs.
3. Second Terminal Post does not require holes to accomodate Anchor Cable.
4. Slip Base Load shall be controlled with a Calibrated Torque Wrench - Torque 155 - 170 ft. lbs.
5. Concrete shall be Class A.

APPROVAL RECOMMENDED:
Eiichi Tanaka
TRAFFIC ENGINEER — 6/14/78 DATE

APPROVED:
Shoichiro Sakiyama
ASSISTANT CHIEF, ENGINEERING — 6/15/78 DATE

NO.	REVISION	APPROVED BY	DATE
	Supersedes Sht. DT 519 Approved 12/30/69	H.I.	6/15/78

STATE OF HAWAII
DEPARTMENT OF TRANSPORTATION
LAND TRANSPORTATION FACILITIES DIVISION

STANDARD DETAIL

BREAKAWAY CABLE TERMINAL (BCT)

Scale: As Shown — Date: June 1978

SHEET No. 14 OF 15 SHEETS DT 519

ORIGINAL PLAN — SURVEY PLOTTED BY — DRAWN BY — TRACED BY — DESIGNED BY — NOTE BOOK — QUANTITIES BY — CHECKED BY — DATE

FED. ROAD DIST. NO.	STATE	FED. AID PROJ. NO.	FISCAL YEAR	SHEET NO.	TOTAL SHEETS
HAWAII	HAW.	R09-050-1(3)	1970	19	19

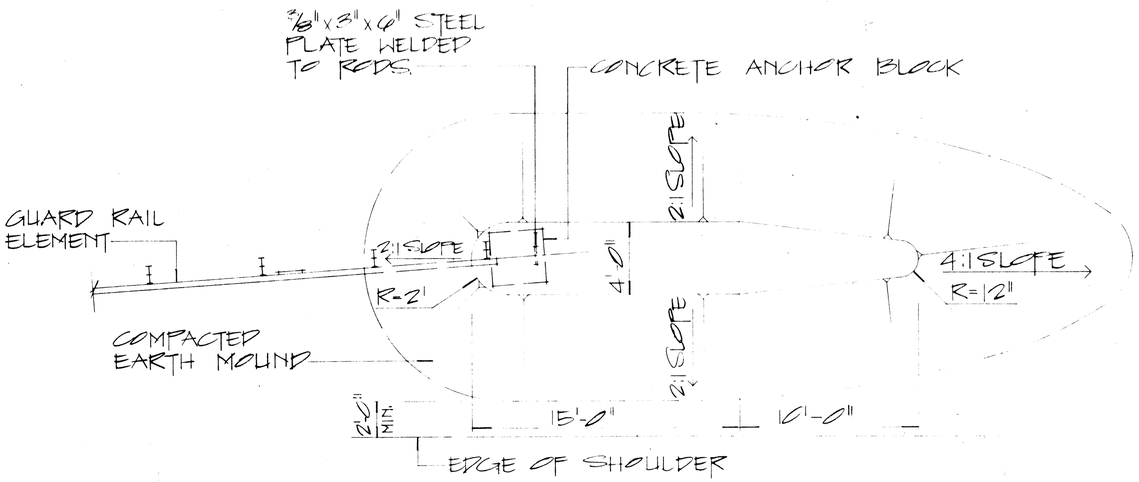

PLAN

EARTH MOUND DETAIL (SINGLE GUARD RAIL)

SCALE: 1/4" = 1'-0"

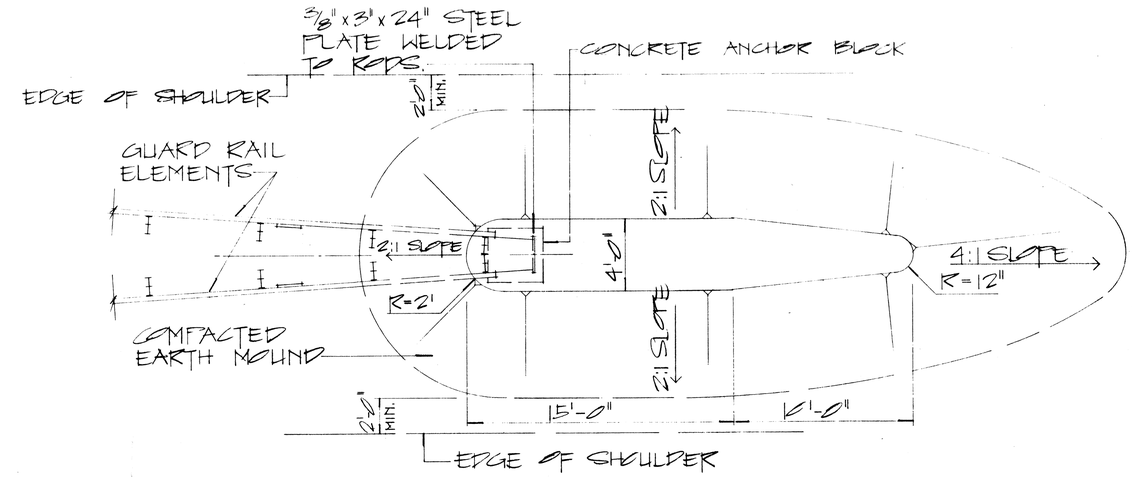

PLAN

EARTH MOUND DETAIL (DOUBLE GUARD RAIL)

SCALE: 1/4" = 1'-0"

*NOTE: 2'-0" WHEN INSTALLED WITH RUB RAIL.

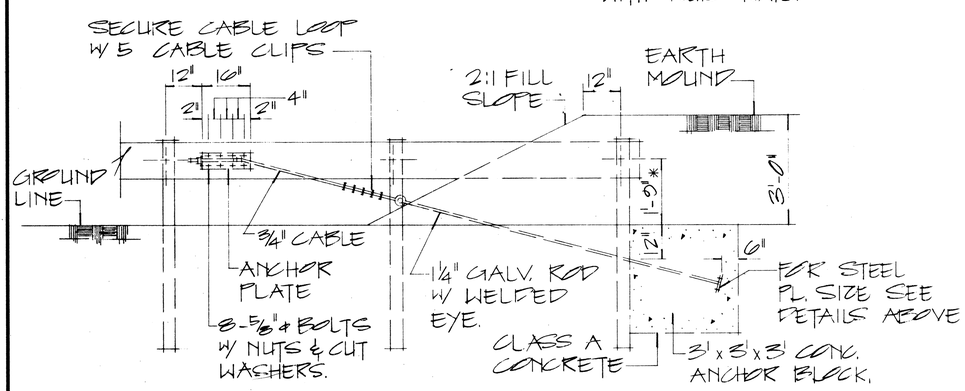

ANCHOR BLOCK DETAIL IN EARTH MOUND

SCALE: 1/2" = 1'-0"

NOTE:

1. GALVANIZED ANCHOR ROD, METAL GUARD RAIL AND POST BURIED IN GROUND SHALL BE COVERED WITH a Min. 20-Mil thickness of Coal TAR ENAMEL. Conforming to AWWA Standard: C 203
2. CONCRETE, GRP, EXCAVATION, EARTH MOUND, ANCHOR RODS AND MISCELLANEOUS APPURTENANCES NECESSARY TO ANCHOR THE GUARD RAIL ENDS SHALL BE INCIDENTAL TO THE METAL GUARD RAIL.

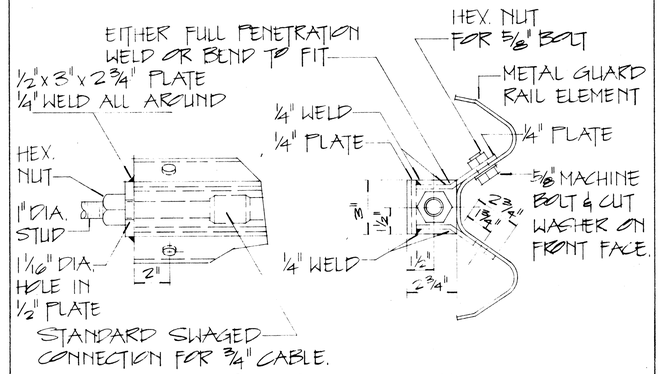

ANCHOR PLATE DETAILS

SCALE: 1" = 3"

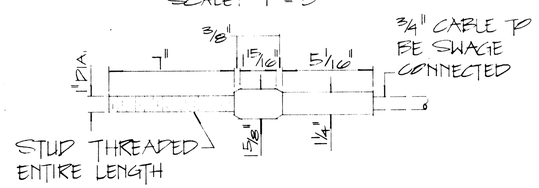

STANDARD SWAGED FITTING AND STUD

SCALE: 1" = 3"

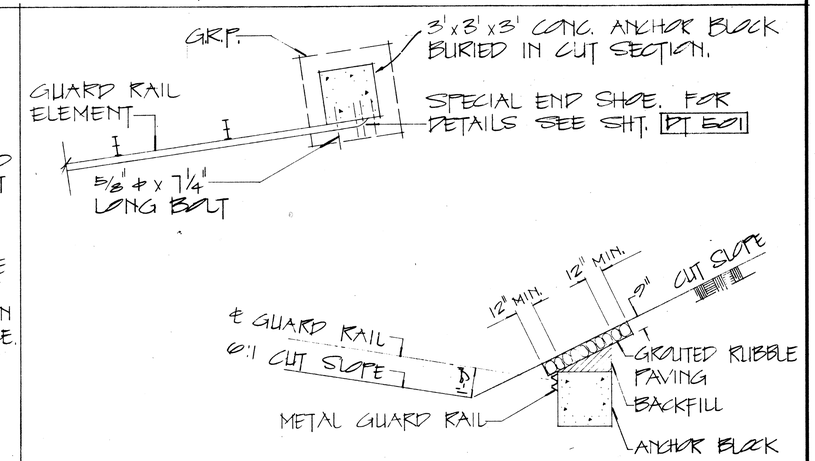

ANCHOR BLOCK IN CUT SECTION

SCALE: 1/4" = 1'-0"

APPROVAL RECOMMENDED: Eichi Tanaka 12/29/69
TRAFFIC ENGINEER — DATE

APPROVED: [illegible] 12-30-69
ASSISTANT CHIEF, ENGINEERING — DATE

NO.	REVISION	APPROVED BY	DATE

STATE OF HAWAII
DEPARTMENT OF TRANSPORTATION
LAND TRANSPORTATION FACILITIES DIVISION

STANDARD DETAILS

EARTH MOUND AND ANCHOR BLOCK DETAILS

SCALE: AS SHOWN OCT 1969

SHEET No. 15 OF 15 SHEETS 17520

ORIGINAL PLAN	SURVEY PLOTTED BY	DATE
	DRAWN BY	
	TRACED BY	
NOTE BOOK	DESIGNED BY	
	QUANTITIES BY	
No.	CHECKED BY	

K+E CRYSTALENE® LA 2920 TRACING PAPER