| FED. ROAD DIST. NO. | STATE | FED. AID PROJ. NO. | FISCAL YEAR | SHEET NO. | TOTAL SHEETS |
|---|---|---|---|---|---|
| HAWAII | HAW. | STP-0700(086) | 2021 | 11 | 17 |

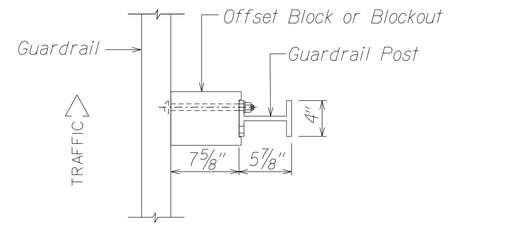


PLAN

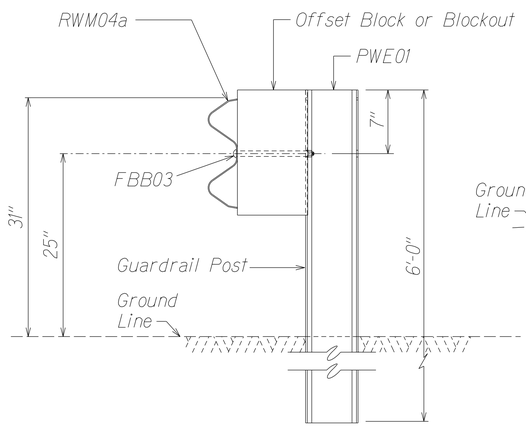


SECTION A-A

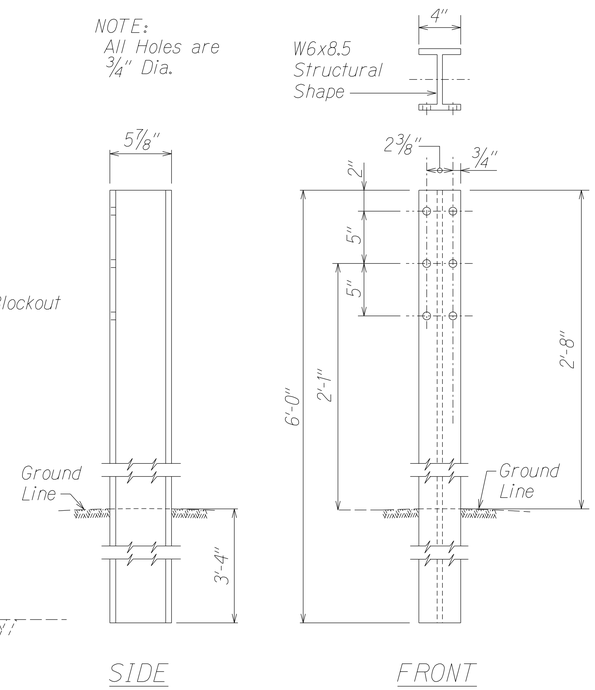


SIDE

FRONT

WIDE-FLANGED GUARDRAIL POST (PWE01)

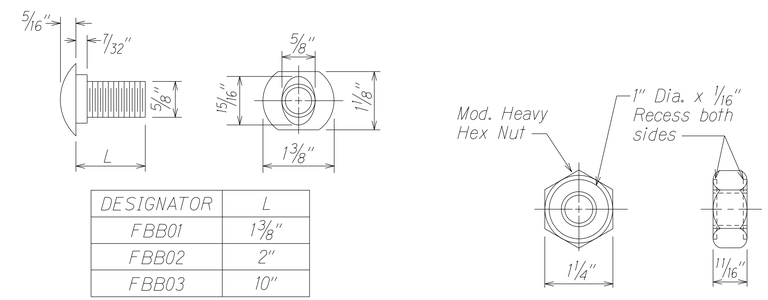


| DESIGNATOR | L |
|---|---|
| FBB01 | 1 3/8" |
| FBB02 | 2" |
| FBB03 | 10" |

GUARDRAIL BOLTS AND RECESSED NUT

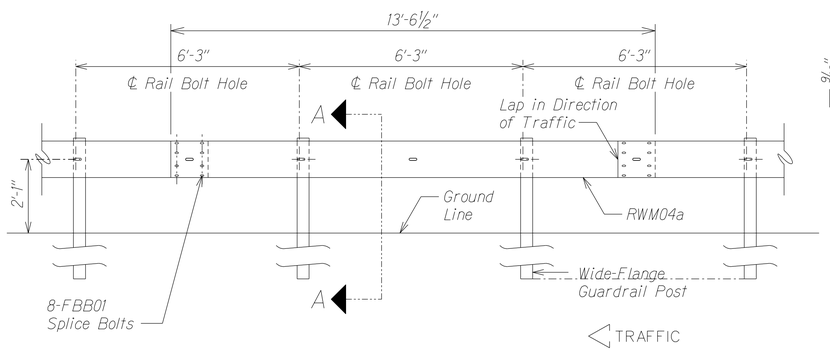


ELEVATION

MIDWEST GUARDRAIL SYSTEM WITH STANDARD 8" OFFSET BLOCK (SGR47)

| DESIGNATOR | BASE METAL THICKNESS |
|---|---|
| RWM04a | 12 Gauge |

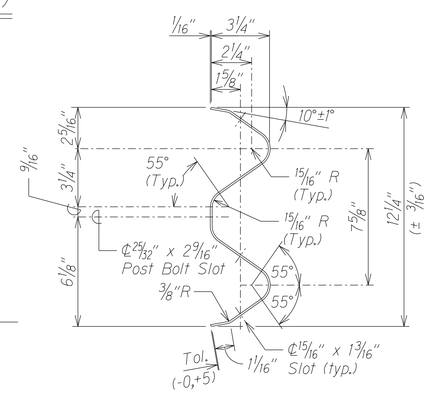


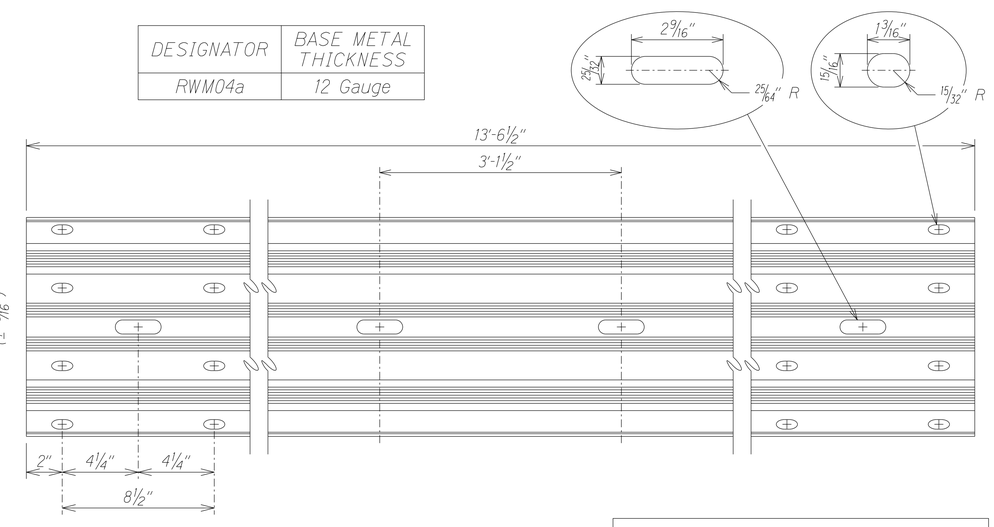


4 SPACE W-BEAM GUARDRAIL (RWM04a)

STATE OF HAWAII
DEPARTMENT OF TRANSPORTATION
HIGHWAYS DIVISION

31" W-BEAM GUARDRAIL WITH STANDARD 8" OFFSET BLOCK

GUARDRAIL & SHOULDER IMPROVEMENTS AT VARIOUS LOCATIONS, PART 6

Federal-Aid Project No. STP-0700(086)

Scale: NTS Date: May 2021

SHEET No. 2 OF 5 SHEETS

| ORIGINAL PLAN | SURVEY PLOTTED BY | DATE |
|---|---|---|
| | DRAWN BY X | |
| | TRACED BY | |
| NOTE BOOK | DESIGNED BY X | |
| | QUANTITIES BY | |
| | CHECKED BY | |

r02/05/20 Dual2/Ernest/standards/Traffic Guardrail Standards/archive/m2_wbeamsudgn