FED. ROAD DIST. NO.	STATE	FED. AID PROJ. NO.	FISCAL YEAR	SHEET NO.	TOTAL SHEETS
HAWAII	HAW.	STP-0700(58)	2006	27	32

NOTES:

A. The work necessary to connect guardrail to the bridge end post shall include all labor, materials, tools, equipment and incidentals necessary to complete the work and will not be paid for separately.

B. Lap terminal connector and rail element in direction of traffic to prevent snagging.

C. All anchor bolts shall be high strength bolts conforming to the requirements of ASTM 325 and Standard Specification, Section 713.04.

D. Anchor bolt length shall be such that a snug fit of the elements and full thread engagement plus 1/4" (max) is attained.

E. "Terminal Connector", "Transition Section" and thrie beam shall be fabricated from 10 gauge steel conforming to the requirements of AASHTO M 180, Type II, Class B.

F. "Terminal Connector" and standard spacer, including all anchor bolts, cap PL, nuts and washers, shall be hot-dip galvanized after fabrication.

G. Cap PL shall be fabricated from ASTM A 36.

H. First 25'-0" of guardrail adjoining "Terminal Connector" shall be galvanized steel and supports spaced as shown on the detail drawings. This section of rail shall be placed on tangent to end post or parallel to roadway, unless conditions at site renders it impossible to do so. Flare point to be determined in field.

I. Double (nest 1st panel) thrie beam elements at all end post connections, except on highways with one-way traffic pattern, use single thrie beam elements at end post on trailing end only.

J. Where double (nested) beam occur, 12" "Back-up Plate" not required.

K. Heads of through anchor bolts shall be placed on the traffic side of the rail.

L. All steel shapes, rails and plates shall conform to ASTM A 36 specifications.

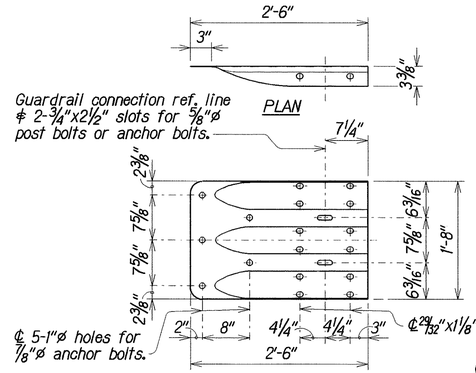

ELEVATION

TERMINAL CONNECTOR

Scale: 1" = 1'-0"

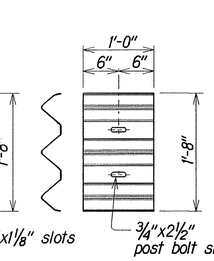

(Use at posts where splices do not occur.)

BACKUP PLATE

Scale: 1" = 1'-0"

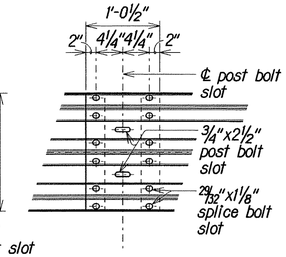

RAIL SPLICE

Scale: 1" = 1'-0"

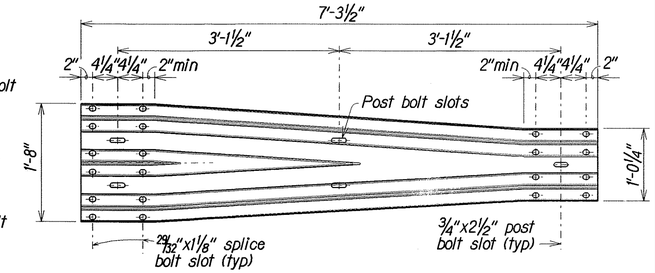

TRANSITION SECTION

Scale: 1" = 1'-0"

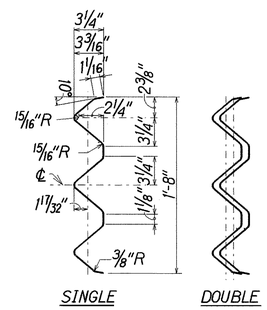

SECTION THRU RAIL ELEMENT

Scale: 1 1/2" = 1'-0"

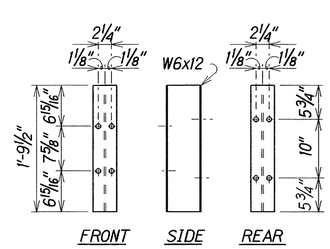

SPACER BLOCK DETAILS

Scale: 1" = 1'-0"

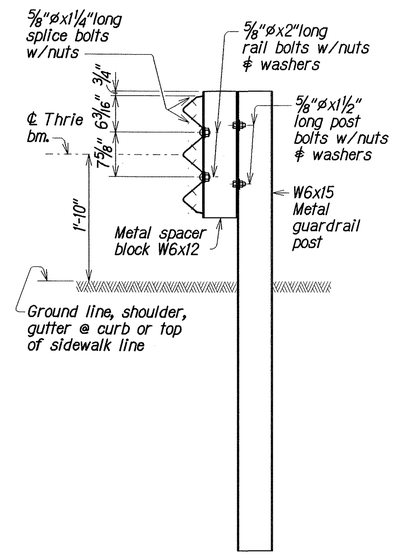

TYPICAL SECTION

METAL GUARDRAIL ON METAL POST WITH METAL SPACER BLOCK

Scale: 1" = 1'-0"

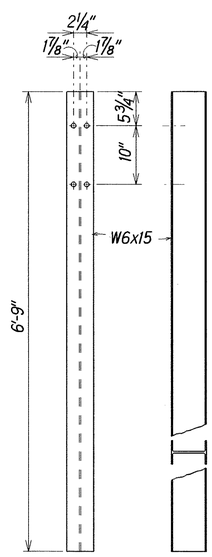

POST DETAILS

Scale: 1" = 1'-0"

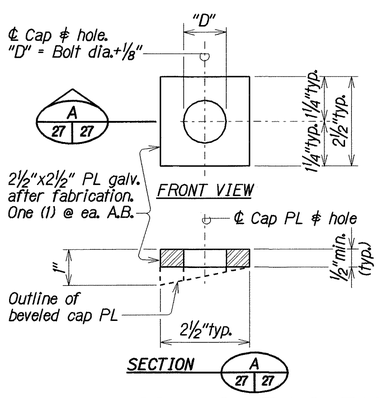

CAP (BEARING) PLATE DETAIL

Scale: 6" = 1'-0"

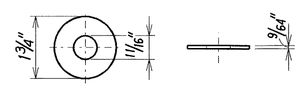

STEEL WASHER FOR 5/8"ø BOLT

Scale: 6" = 1'-0"

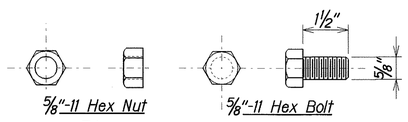

5/8"ø HEX BOLT & NUT

Scale: 6" = 1'-0"

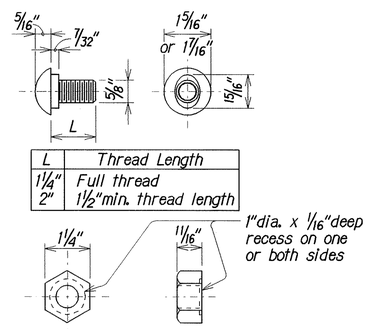

L	Thread Length
1 1/4"	Full thread
2"	1 1/2"min. thread length

5/8"ø BUTTON HEAD BOLT & RECESS NUT

Scale: 6" = 1'-0"

ORIGINAL PLANS	SURVEY PLOTTED BY	DATE 5/06
	DRAWN BY	
	TRACED BY	
NOTE BOOK NO. 0000	DESIGNED BY X	
	QUANTITIES BY	
	CHECKED BY	

STATE OF HAWAII
DEPARTMENT OF TRANSPORTATION
HIGHWAYS DIVISION

STRONG POST MODIFIED THRIE BEAM GUARDRAIL

KUHIO HIGHWAY, KUAMOO ROAD & KOKEE ROAD
Guardrail and Shoulder Improvements
Federal-Aid Project No. STP-0700(58)

Scale: As Shown — Date: July 2006

SHEET No. 7 OF 11 SHEETS