FED. ROAD DIST. NO.	STATE	FED. AID PROJ. NO.	FISCAL YEAR	SHEET NO.	TOTAL SHEETS
HAWAII	HAW.	RSG-0570(2)	1980	11	37

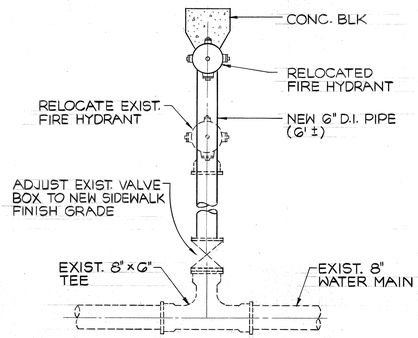

FIRE HYDRANT RELOCATION DETAIL (1/11)

NOT TO SCALE

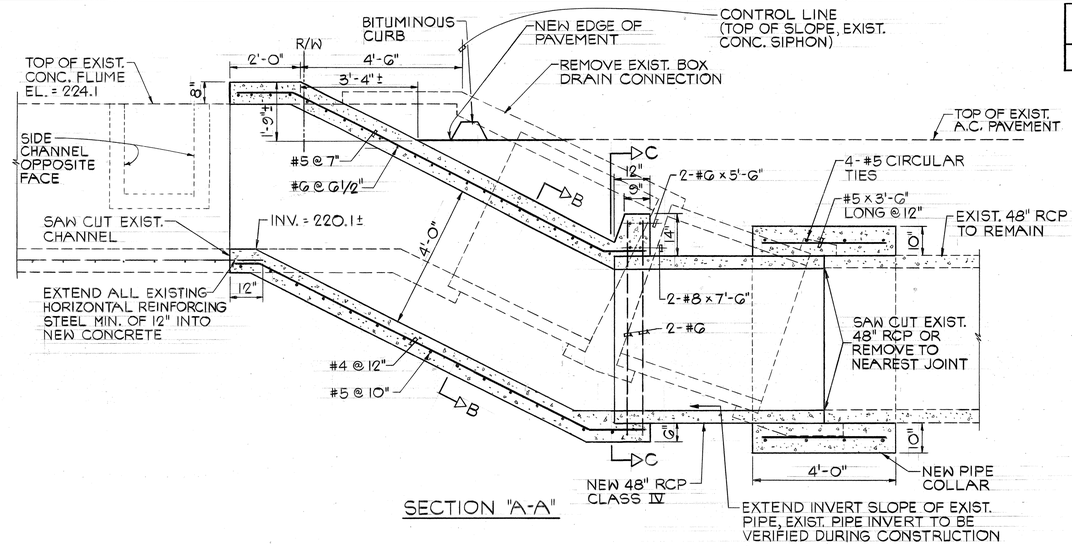

SECTION "A-A"

NOTE:
CONCRETE SHALL BE CLASS "E" CONC. FOR SIPHON OUTLET STRUCTURE.

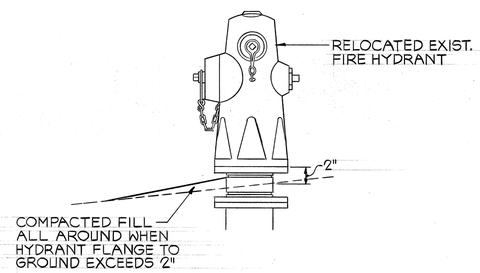

FIRE HYDRANT ELEVATION

NOT TO SCALE

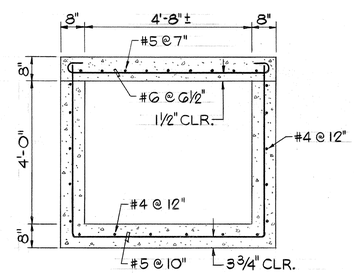

SECTION "B-B"

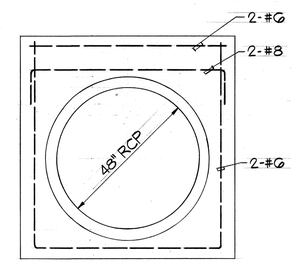

SECTION "C-C"

ITEM NO.	DESCRIPTION	QUANTITY	UNIT
206.2020	STRUCTURE EXCAVATION	36	C.Y.
206.7001	STRUCTURE BACKFILL	16	C.Y.
503.5011	CLASS "E" CONCRETE	9	C.Y.
602.1020	REINFORCING STEEL	1000	LB.
603.1056	48-INCH REINF. CONC. PIPE, CLASS IV	6	L.F

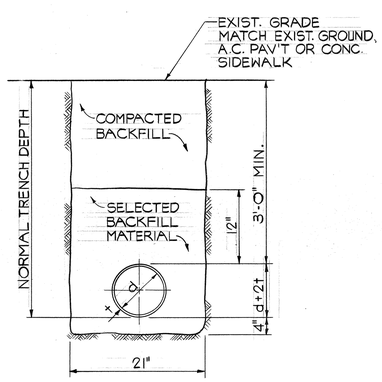

WATER LINE TRENCH DETAIL

NOT TO SCALE

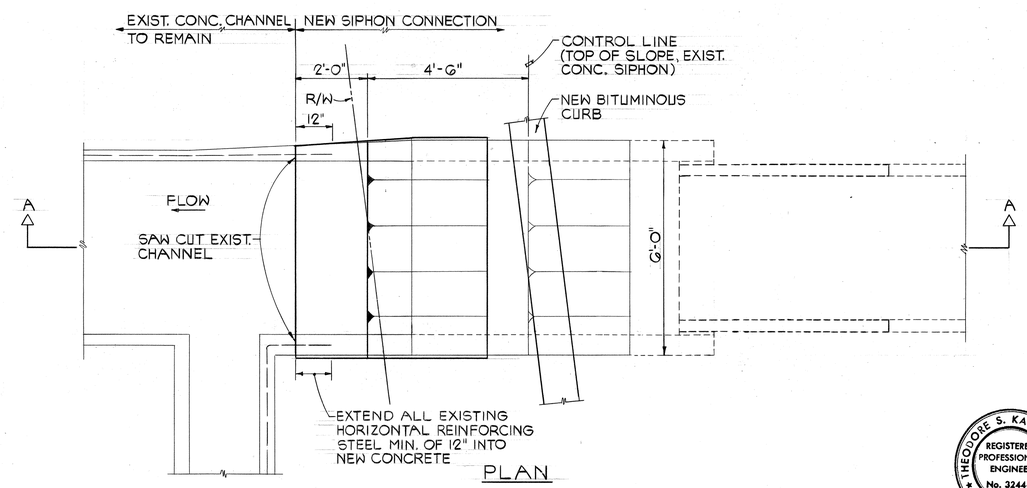

PLAN

SIPHON EXTENSION DETAIL (2/11)

SCALE: 1/2" = 1'-0"

APPROVED BY:

Wayne Hinagumi 1/29/80

MANAGER AND CHIEF ENGINEER — DATE
DEPARTMENT OF WATER
COUNTY OF KAUAI

THEODORE S. KAWAHIGASHI — REGISTERED PROFESSIONAL ENGINEER No. 3244-E — HAWAII, U.S.A.

THIS WORK WAS PREPARED BY ME OR UNDER MY SUPERVISION

Theodore S. Kawahigashi
Signature

STATE OF HAWAII
DEPARTMENT OF TRANSPORTATION
HIGHWAYS DIVISION

AHUKINI ROAD AND KUHIO HIGHWAY IMPROVEMENTS
FED. AID PROJECT NO. RSG-0570(2)

WATER AND DRAINAGE DETAILS

SCALE: AS SHOWN — DATE: 5-6-80

SHEET No. 1 OF 1 SHEETS

ORIGINAL PLAN		
	SURVEY PLOTTED BY	DATE
	TRACED BY	"
	DESIGNED BY	"
NOTE BOOK	QUANTITIES BY	"
No.	CHECKED BY	"

9