FED. ROAD DIST. NO.	STATE	FED. AID PROJ. NO.	FISCAL YEAR	SHEET NO.	TOTAL SHEETS
HAWAII	HAW.	STP-0700(40)	1998	ADD.4	13

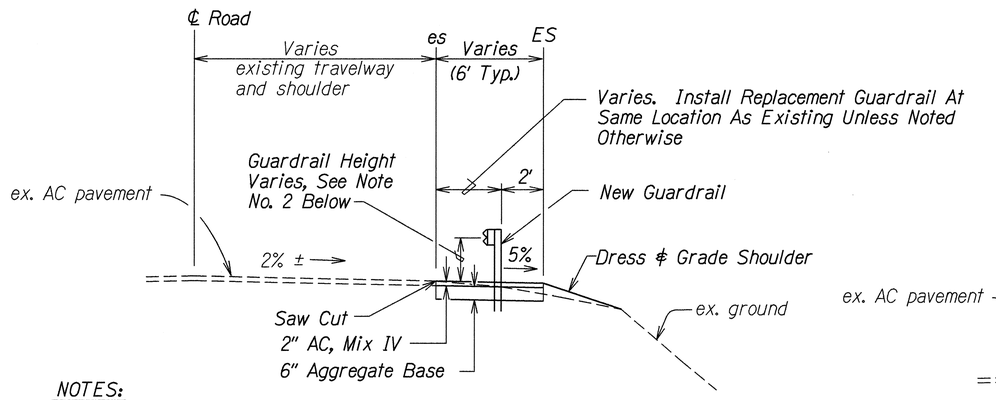

NOTES:

1. A.C. Pavement shall be placed at all new guardrail and terminal ends except at Kuhio Highway, mile post 4.0 to 5.0 (Items 1, 2 & 3 on Plan Sheet No. 6)
2. New Guardrail placed between mile post 16.85 and mile post 21.55 shall be set at 1'-10". Reset guardrail posts of existing remaining rails for items (25) through (44) on plan sheet nos 7 & 8 (325 Each). Transaction back to 1'-9" at existing terminal ends.
3. Saw Cut within 6" of exist. es. Do not remove edge striping.
4. New pavement shall extend 2' min. behind guardrail where room permits. If top of slope is closer than 2', pavement shall be extended to top of slope. No fill shall be required past top of slope.

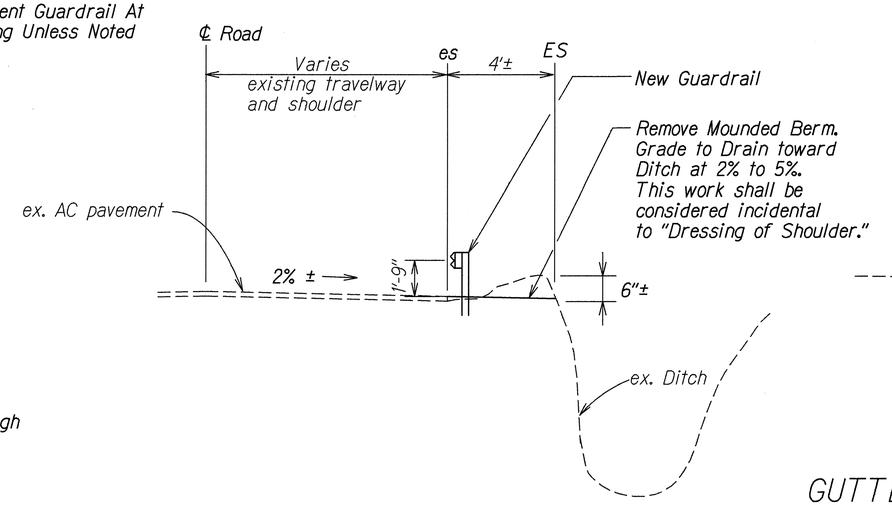

GUARDRAIL SECTION, MP 4.03 TO MP 4.91 (B/1)

Scale: 3/8" = 1'-0"

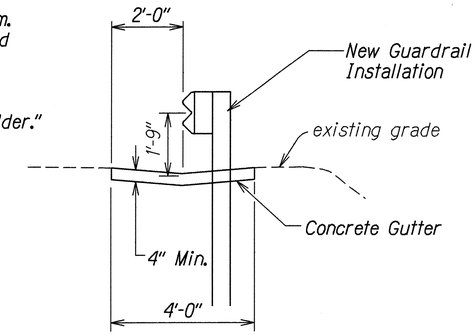

GUTTER, TYPE 2 (1211214) DETAIL (1/6 4)

Scale: 1/2" = 1'-0"

TYPICAL GUARDRAIL SECTION (A/1)

Scale: 3/8" = 1'-0"

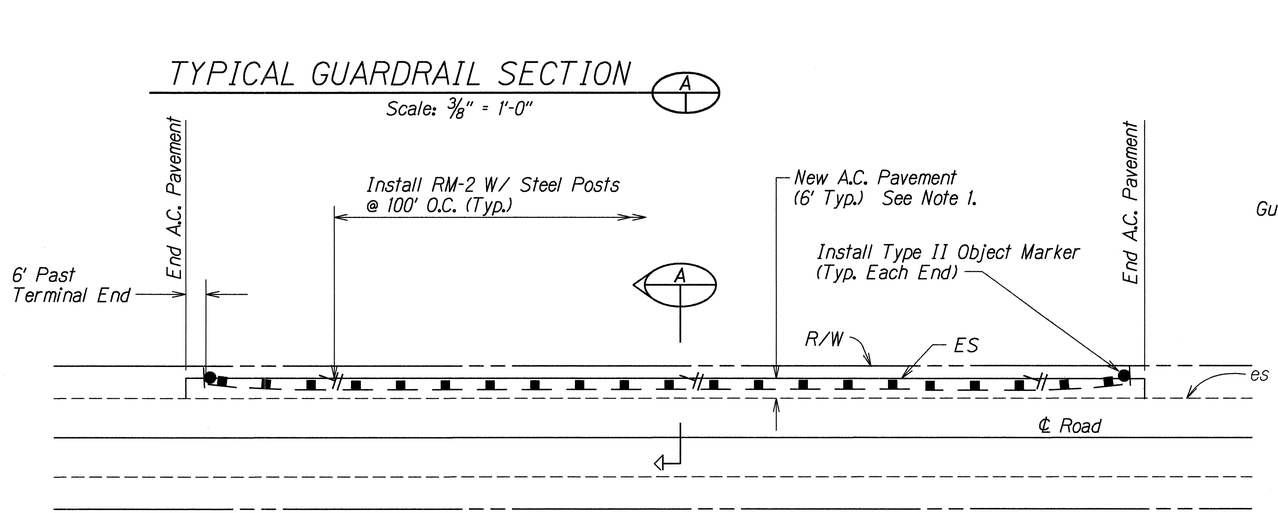

NOTE: A.C. Pavement shall be placed under all new guardrail and all new terminal ends.

TYPICAL GUARDRAIL PLAN

Scale: 1"=20'

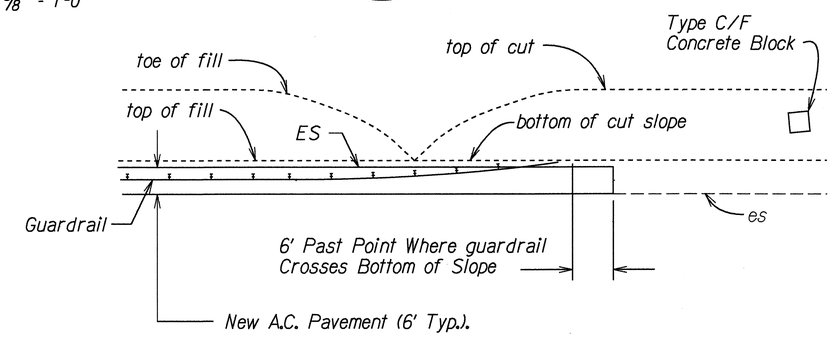

TYPICAL GUARDRAIL PLAN AT TYPE C/F FLARE

Not To Scale

DATE	REVISION
5/8/98	Revised Guardrail Section and Gutter Detail and Added Typical Guardrail Plan at Type C/F Flare.

STATE OF HAWAII
DEPARTMENT OF TRANSPORTATION
HIGHWAYS DIVISION

TYPICAL SECTIONS AND DETAILS

Guardrail and Shoulder Improvements at Various Locations
Fed. Aid Project No. STP-0700(40)

Scale: As Shown — Date: April, 1998

SHEET No. 1 OF 1 SHEETS

ADD.4

ORIGINAL PLAN — SURVEY PLOTTED BY — DRAWN BY — TRACED BY — DESIGNED BY — QUANTITIES BY — CHECKED BY — DATE — NOTE BOOK — No.