FED. ROAD DIST. NO.	STATE	FED. AID PROJ. NO.	FISCAL YEAR	SHEET NO.	TOTAL SHEETS
HAWAII	HAW.	STP-0700(38)	1998	19	29

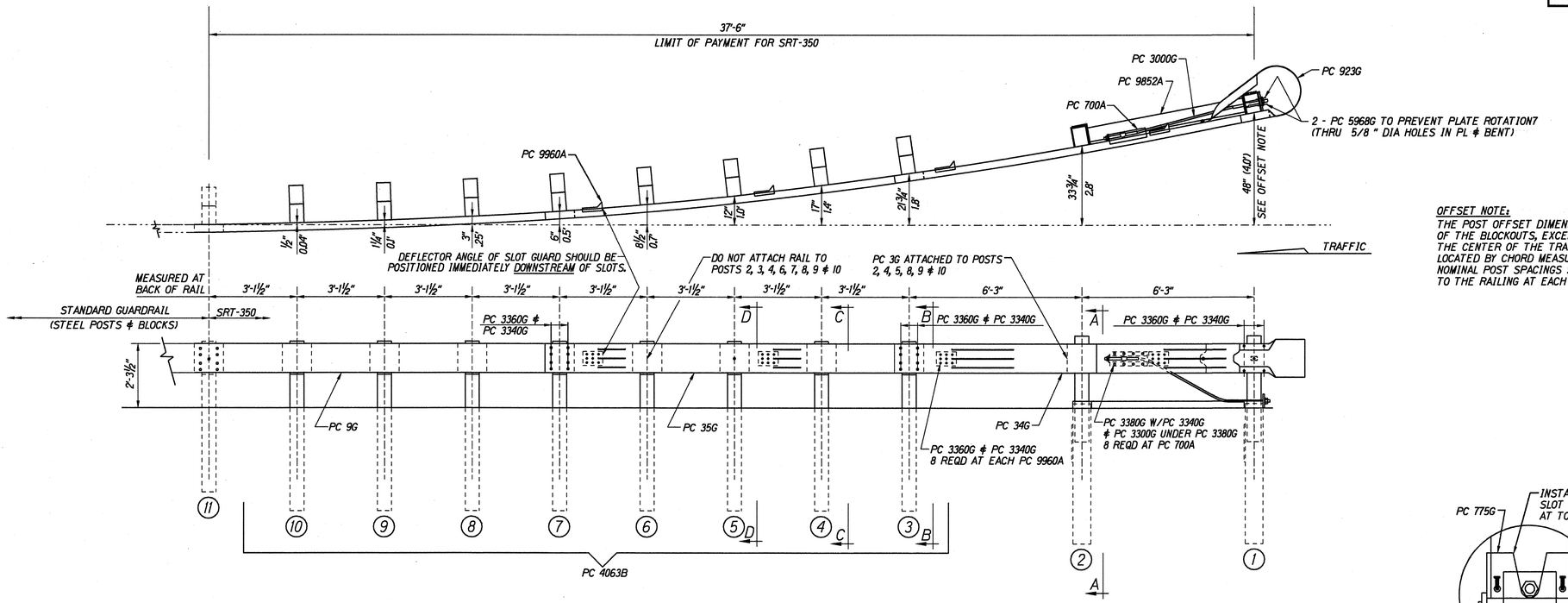

OFFSET NOTE:
THE POST OFFSET DIMENSIONS ARE GIVEN TO THE CENTER OF THE TRAFFIC FACE OF THE BLOCKOUTS, EXCEPT AT THE FIRST TWO POSTS, WHERE THE DIMENSION IS TO THE CENTER OF THE TRAFFIC FACE OF THE POST. OFFSET POINTS ARE TO BE LOCATED BY CHORD MEASUREMENTS AT THE BACK OF THE RAIL EQUAL TO THE NOMINAL POST SPACINGS SHOWN. POSTS ARE TO BE SET APPROXIMATELY RADIAL TO THE RAILING AT EACH POST LOCATION.

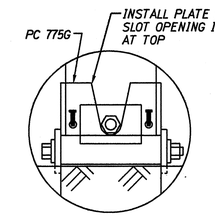

BEARING PLATE ORIENTATION

BILL OF MATERIAL		
PC	QTY	DESCRIPTION
3G	7	12/12"/BACKUP (GUARDRAIL)
9G	1	12/126"/6'3/S (GUARDRAIL)
34G	1	12/126/S SRT-1 (GUARDRAIL)
35G	1	12/126/6'3/S SRT-2 (GUARDRAIL)
700A	1	CABLE ANCHOR BRACKET
705G	1	2"ø x 5½" PIPE
736G	2	5'0 TUBE SLEEVE
766G	2	¼x 18 x 24 SOIL PLATE
775G	1	⅝x 6 x 8 BEARING PLATE
923G	1	12/BARRIER/98" (TERMINAL)
3000G	1	¾x 6'6 CABLE
3300G	22	⅝" WASHER
3320G	1	3/16x 1¾x 3 WASHER
3340G	77	⅝" HEX NUT
3360G	53	⅝"ø x 1¼" SPLICE BOLT
3380G	8	⅝"ø x 1½" HEX HD BOLT
3478G	4	⅝"ø x 7½" HEX HD BOLT
3497G	2	⅝"ø x 9½" HEX HD BOLT
3500G	2	⅝"ø x 10" POST BOLT
3580G	8	⅝"ø x 18" POST BOLT
3900G	1	1" WASHER
3910G	2	1" HEX NUT
4063B	8	6'0 POST 6 x 8
4075B	8	14" BLOCK 6 x 8
4147B	2	3' 9 POST 5½x 7½
5968G	2	16d NAIL SRT
9852A	1	STRUT ASSEMBLY
9960A	4	SLOT GUARD
9961G	1	⅜x 3 x 4 PLATE WASHER

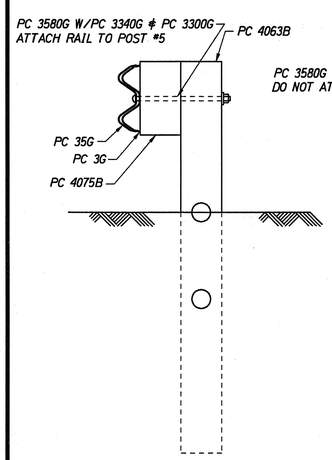

SECTION "D-D"
(@ POST #5)

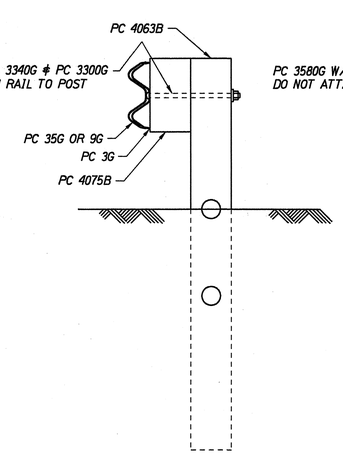

SECTION "C-C"
(@ POSTS #4, #6, #8, #9 & #10)

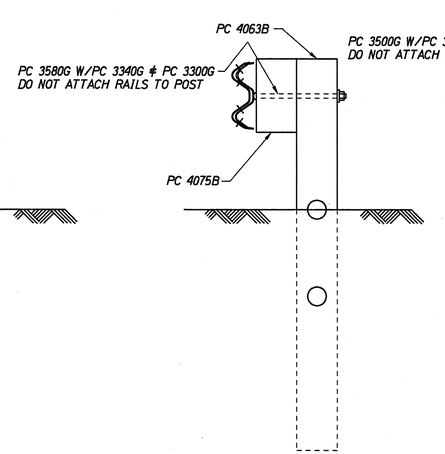

SECTION "B-B"
(@ POSTS #3 & #7)

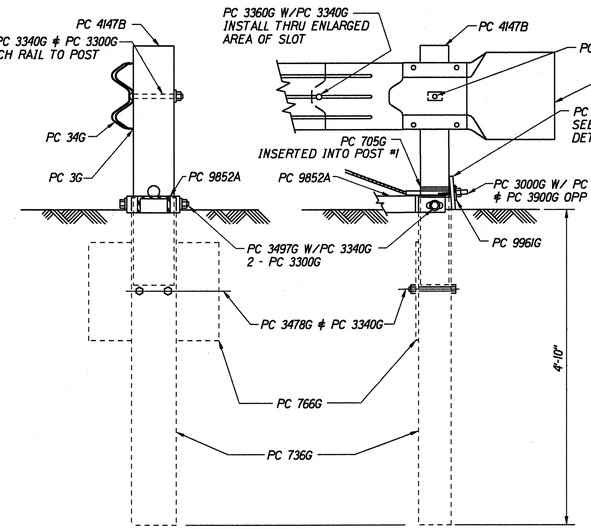

SECTION "A-A"
(@ POST #2)

ENLARGED VIEW @ POST #1

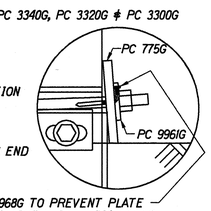

ORIGINAL PLAN	SURVEY PLOTTED BY	DATE
	DRAWN BY X	
	TRACED BY X	
NOTE BOOK 00/4/35011	DESIGNED BY X	
12/mnsmn07	QUANTITIES BY	
	CHECKED BY	

STATE OF HAWAII
DEPARTMENT OF TRANSPORTATION
HIGHWAYS DIVISION

SRT-350

SLOTTED RAIL TERMINAL

RICE ST., KUHIO HWY. & KUAMOO RD.
GUARDRAIL AND SHOULDER IMPROVEMENTS
AT VARIOUS LOCATIONS
FEDERAL AID PROJECT NO. STP-0700(38)

Scale: As Shown — Date: Sept, 1996

SHEET No. 1 OF 1 SHEETS