FED. ROAD DIST. NO.	STATE	FED. AID PROJ. NO.	FISCAL YEAR	SHEET NO.	TOTAL SHEETS
HAWAII	HAW.	STP-0700(38)	1998	26	29

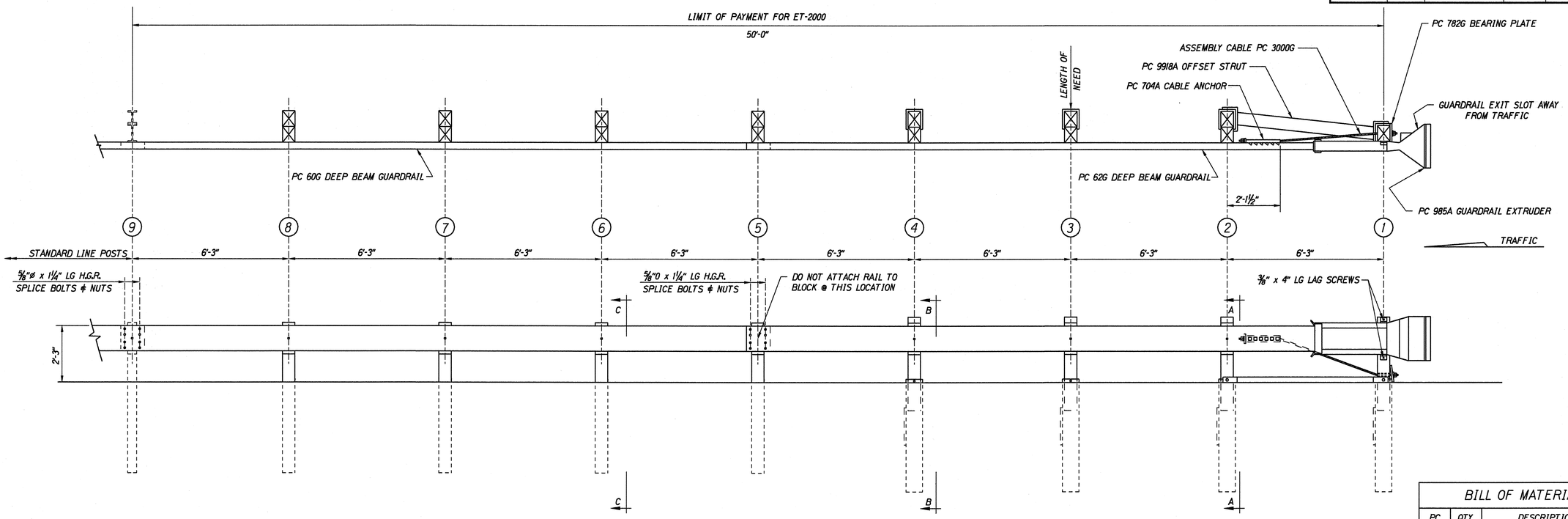

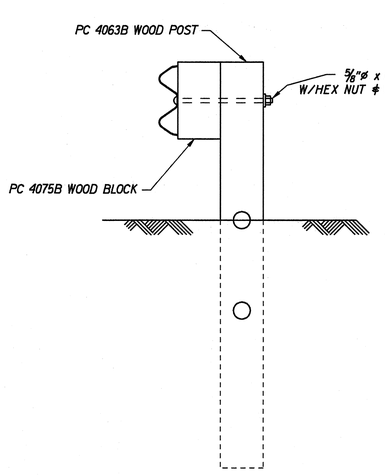

NOTE:
SECTION "C-C" IS SIMILAR @ POST #5 EXCEPT RAIL IS NOT ATTACHED.

SECTION "C-C"
(TYP @ POSTS #6, 7 & 8)

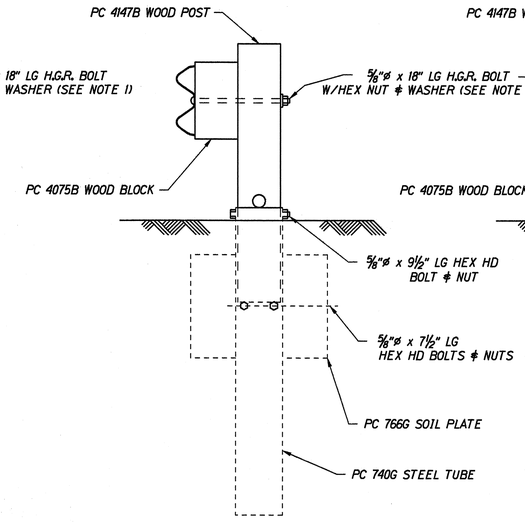

SECTION "B-B"
(TYP @ POSTS #3 & 4)

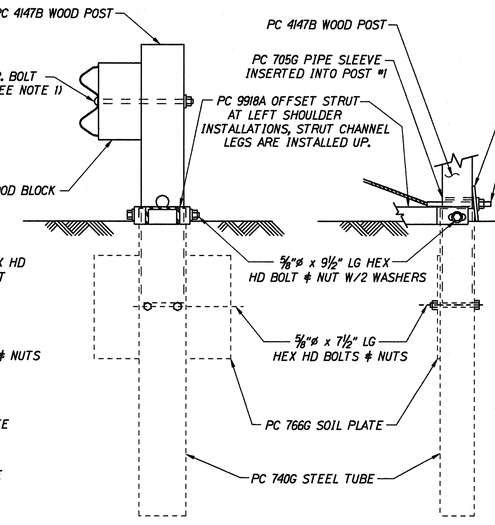

SECTION "A-A"
(@ POST #2)

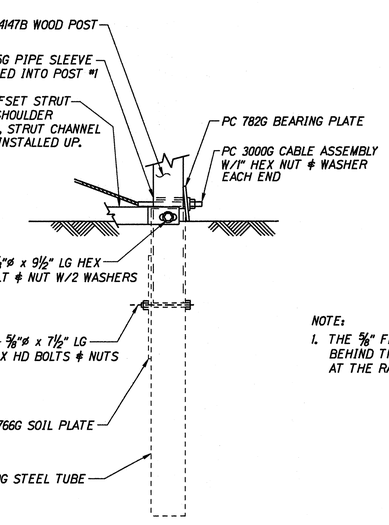

PARTIAL VIEW @ POST #1

NOTE:
1. THE 5/8" FLAT WASHER IS USED UNDER THE NUT, BEHIND THE POST ONLY. NO WASHER IS USED AT THE RAIL.

BILL OF MATERIAL

PC	QTY	DESCRIPTION
60G	1	12/25/6'3/S (GUARDRAIL)
62G	1	12/25/6'3/S ANC (GUARDRAIL)
704A	1	CABLE ANCHOR BRACKET
705G	1	2" x 5½" PIPE
740G	4	4'6 TUBE SLEEVE
766G	4	¼" x 18" x 24" SOIL PLATE
782G	1	5/8" x 8" x 8" BEARING PLATE
985A	1	ET-2000 EXTRUDER
3000G	1	CABLE ¾x 6'6
3300G	11	5/8" WASHER
3340G	35	5/8" HEX NUT
3360G	16	5/8"ø x 1¼" SPLICE BOLT
3478G	8	5/8"ø x 7½" HEX HD BOLT
3497G	4	5/8"ø x 9½" HEX HD BOLT
3580G	7	5/8"ø x 18" POST BOLT
3900G	2	1" WASHER
3910G	2	1" HEX NUT
4063B	4	WD 6'0 POST 6 x 8
4075B	7	WD BLOCK 1'2 6" x 8" DR
4147B	4	WD 3'9 POST 5½x 7½
4228G	2	3/8"ø x 4" LAG SCREW
9918A	1	6'3 STRUT

ORIGINAL PLAN	SURVEY PLOTTED BY	DATE
	DRAWN BY X	
	PLACED BY X	
NOTE BOOK	TRACED BY X	
	QUANTITIES BY	
	CHECKED BY	

STATE OF HAWAII
DEPARTMENT OF TRANSPORTATION
HIGHWAYS DIVISION

KAPULE HWY & KUHIO HWY
ET-2000 - OPTION "B"
Guardrail Improvements
at Various Locations, Kauai
Federal Aid Project No. STP-0700(38)

Scale: As Shown Date: July, 1997

SHEET No. 2 OF 2 SHEETS