| FED. ROAD DIST. NO. | STATE | FED. AID PROJ. NO. | FISCAL YEAR | SHEET NO. | TOTAL SHEETS |
|---|---|---|---|---|---|
| HAWAII | HAW. | STP-0700(28) | 1994 | 5 | 10 |

## ESTIMATED QUANTITIES

| ITEM NO. | DESCRIPTION | UNIT | QUANTITIES |
|---|---|---|---|
| 507.7501 | Concrete End Posts (Upstream) And Guardrail Concrete Footing | Each | 2 |
| 507.7502 | Concrete End Post (Downstream) | Each | 2 |
| 606.3200 | Guardrail, Type 3, Single with Rubrail on Steel Post (W6x9) | Lin. Ft. | 50 |
| 606.3221 | Guardrail, Type 3, Single with Rubrail on Steel Post, (W8x18) On Concrete Structure | Lin. Ft. | 50 |

## NOTES

1. "Terminal Connector" shall be fabricated from 10 guage steel conforming to the requirements of AASHTO M 180.
2. All anchor bolts shall be high strength bolts conforming to requirements of ASTM 325.
3. Anchor bolt length shall be such that a snug fit of the elements and full thread engagement plus 1/4" is attained.
4. Terminal Connector post and standard spacer, including all anchor bolts, cap plate, nuts and washers, shall be hot-dip galvanized after fabrication.
5. First 25'-0" of guardrail adjoining "Terminal Connector" shall be of galvanized steel and supports spaced as shown on the detail drawings, This section of rail to be placed on tangent to end post or parallel to roadway, unless conditions at site renders it impossible to do so. Flare point to be determined in field.
6. Where double (nested) rail element occurs, 12" "Backup Plate" not required.
7. Large impacting or vibratory type of equipment will not be permitted in the removal operation of the designated items.
8. Prior to commencing excavation work for the guardrail footings, the Contractor shall excavate for, and locate the existing 12-inch waterline on both sides of the bridge. A minmum of 3-excavations shall be made on each side of the bridge to verify the waterline alignment. Driving of guardrail post will not be allowed until pipeline alignment is established. Excavation costs shall be incidental to other items of work.
9. The Contractor shall be solely responsible for the protection of utilities and existing and new structures from damage due to construction. Any damage shall be repaired at his expense to the satisfaction of the Engineer.
10. Construction of the new end post and the work necessary to connect the guardrail to the end post, shall include all labor, materials, tools, equipments and incidentals necessary to complete the work. This work will be measured and paid for in the unit of one.

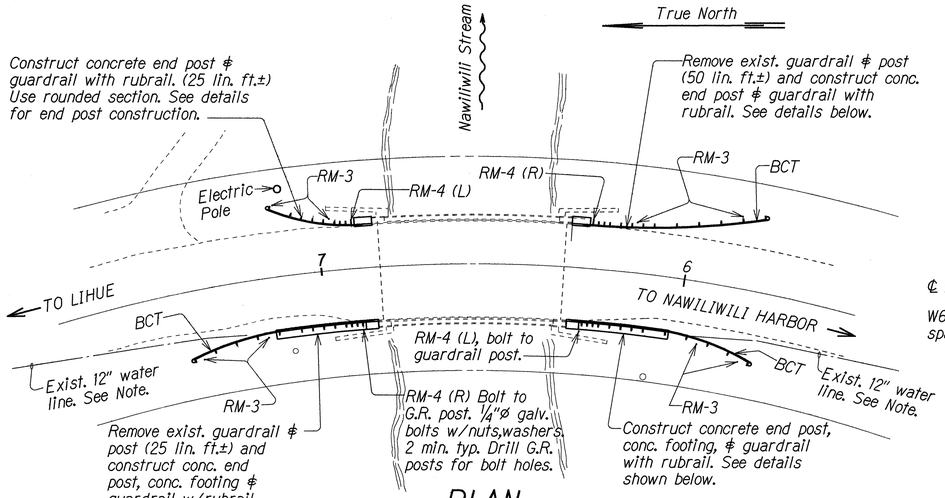


## PLAN

Scale: 1" = 20'-0"

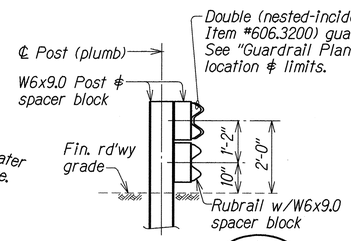


## SECTION B1 (5 | 5)

## (POST ON EARTH)

Scale: 1/2" = 1'-0"

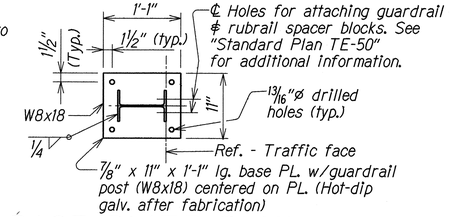


## BASE PLATE PLAN

Scale: 1' = 1'-0"

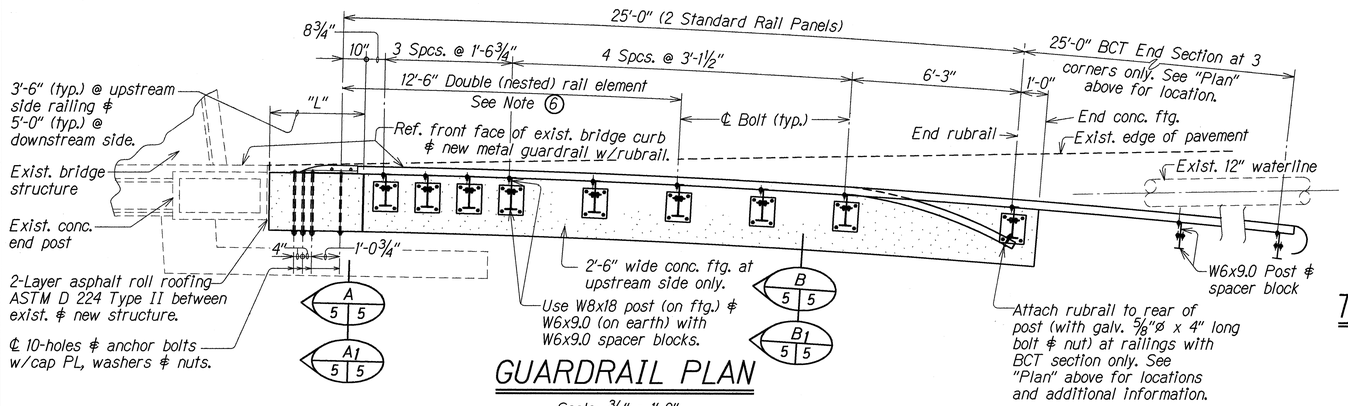


## GUARDRAIL PLAN

Scale: 3/8" = 1'-0"

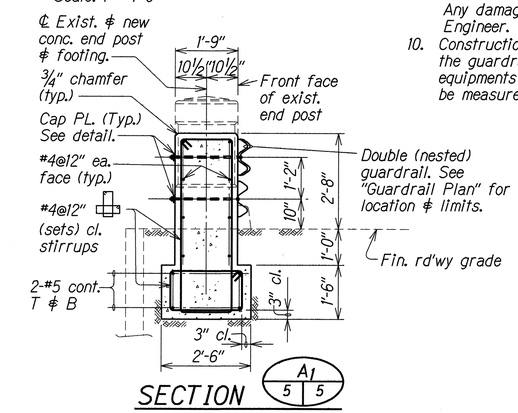


## SECTION A1 (5 | 5)

## TYP. DOWNSTREAM SIDE END POST AND POST DETAILS

Scale: 1/2" = 1'-0"

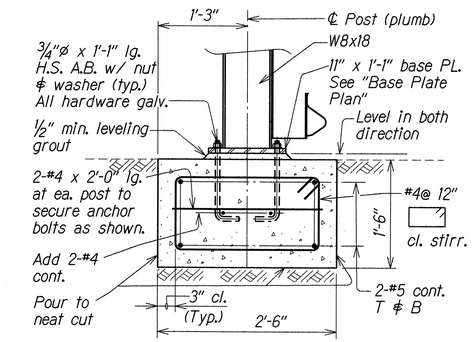


(Reinf. & anchor bolts in ftg. incidental to Item No. 507.7501)

## FOOTING DETAIL

Scale: 1' = 1'-0"

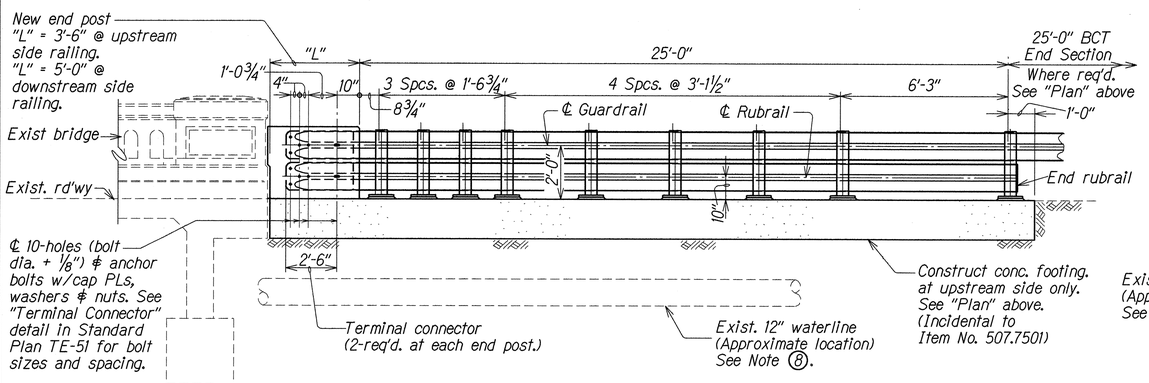


## GUARDRAIL ELEVATION

Scale: 3/8" = 1'-0"

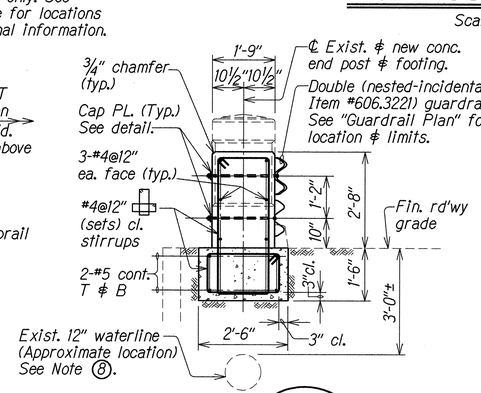


## SECTION A (5 | 5)

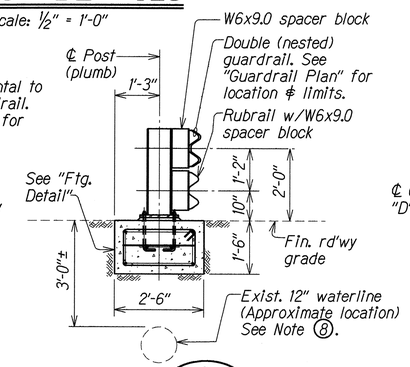


## SECTION B (5 | 5)

## (POST ON FOOTING)

## TYP. UPSTREAM SIDE END POST AND POST DETAILS

Scale: 1/2" = 1'-0"

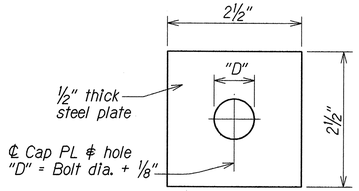


## CAP PLATE DETAIL

N.T.S.

STATE OF HAWAII
DEPARTMENT OF TRANSPORTATION
HIGHWAYS DIVISION

## GUARDRAIL DETAILS

## NAWILIWILI BRIDGE

GUARDRAIL AND SHOULDER IMPROVEMENTS
ROUTE 51-RICE STREET, ROUTE 56-KUHIO HIGHWAY
Fed. Aid Project No. STP-0700(28)

Scale: As Noted — Date: June 1993

SHEET No. 5 OF 10 SHEETS

| ORIGINAL PLAN | | DATE |
|---|---|---|
| SURVEY PLOTTED BY | L.M.A. | NOV. 1992 |
| DESIGN PLAN BUILT BY | | NOV. 1992 |
| DESIGN FILE TRACED BY | T.S. | NOV. 1992 |
| DESIGNED BY | T.S. | NOV. 1992 |
| QUANTITIES BY | M.S.T. | NOV. 1992 |
| CHECKED BY | | |
| No. bridge | | |