Notes: Stations Refer To Baseline Stations Unless Otherwise Noted.

Pipe sheet thickness (C.A.P./C.S.P. Sht. Thk.) is in inches.

DRAINAGE SUMMARY

PROJECT: HANAMAULU ROAD & APPROACHES

PROJECT NO.: F-051-1(7)

FED. ROAD DIST. NO.	STATE	FED. AID PROJ. NO.	FISCAL YEAR	SHEET NO.	TOTAL SHEETS
HAWAII	HAW.	F051-1(7)	1987	30	164

TYPE OF STRUCTURE	STATION (FROM-TO)	Structure Excavation For Drainage System	Concrete In Drainage System (Class A)	Cement Rubble Masonry	Reinforcing Steel For Drainage System	Bed Course Material For Culverts	30-Inch Reinforced Concrete Pipe, Class III	42-Inch Reinforced Concrete Pipe, Class III	48-Inch Reinforced Concrete Pipe, Class III	54-Inch Reinforced Concrete Pipe, Class III	24-Inch C.S.P. Sht. Thk., 0.109	108-Inch Structural Steel Plate Pipe, No. 8 Gage ~~or~~ 108-Inch C.A.P. Sht. Thk., ~~0.135~~ 0.125 or 108-Inch C.A.P. Sht. Thk. 0.135 (3"x1")	24-Inch C.S.P. Sht. Thk., 0.168 Or 24-Inch C.A.P. Sht. Thk., 0.075	48-Inch C.S.P. Sht. Thk., 0.168 Or 48-Inch C.A.P. Sht. Thk., ~~0.075~~ 0.105	66-Inch C.S.P. Sht. Thk., 0.168 Or 66-Inch C.A.P. Sht. Thk., ~~0.075~~ 0.164	24-Inch C.S.P. Sht. Thk., 0.079; 24-Inch R.C.P. Cl. III; Or 24-Inch C.A.P. Sht. Thk., 0.075
ITEM NO.		206. 2020	503. 0025	508. 0100	602. 1020	603. 0010	603. 1012	603. 1016	603. 1018	603. 1020	603. 2085	603. 3127	603. 6001	603. 6161	603. 6441	603. 7201
UNIT USED		Cu Yd	Cu Yd	Cu Yd	Lb	Cu Yd	Lin Ft	Lin Ft	Lin Ft	Lin Ft	Lin Ft	Lin Ft	Lin Ft	Lin Ft	Lin Ft	Lin Ft
Drain Inlet #1	Sta. 55+06.32 Lt.	11.42 ~~11~~	2.64 ~~3.3~~		555 ~~489~~											
Drainline	Sta. 55+06.32 Lt. - 55+33 Lt.	19.55 ~~27~~														23 ~~27~~
Storm Drain Manhole #1	Sta. 55+33 Lt.	13.23 ~~14~~	4.33 ~~4.0~~		925 ~~658~~											
Drainline	Sta. 57+20 - 57+40	20.17 ~~30~~														
Storm Drain Manhole #2	Sta. 57+40	13.53 ~~17~~	5.40 ~~5.9~~		1312 ~~857~~											
Drain Inlet #2	Sta. 57+26.07 Lt.	7.51 ~~11~~	2.88 ~~3.3~~		517 ~~484~~											
Drainline	Sta. 57+26.07 Lt. - 57+40	29.84 ~~48~~														
Drainline	Sta. 57+61 Rt. - 57+40	97.76 ~~157~~														
Headwall #1	Sta. 57+61 Rt.	23.67 ~~50~~		5.24 ~~5.0~~												
Splitter Box #1	Sta. 59+15 Lt.	75.86 ~~46~~	8.82 ~~10.9~~		778 ~~803~~											
Siphon	Sta. 59+53.22	168.0 ~~517~~														
Splitter Box #2	Sta. 59+95 Rt.	40.72 ~~46~~	8.82 ~~10.2~~		777 ~~729~~											
18-Inch Slotted Drain	Sta. 57+43 - 59+50	70.13 ~~64~~														
18-Inch Slotted Drain	Sta. 59+55 - 61+00	~~38~~														
Grated Box #1	Sta. 61+00	5.23 ~~8~~	1.37 ~~1.3~~		111											
Drainline	Sta. 61+00 - 61+00 Rt.	14.52 ~~29~~														
18-Inch Slotted Drain	Sta. 61+05 - 63+00 Lt.	43.11 ~~51~~														
Grated Box #2	Sta. 63+00 Lt.	5.18 ~~8~~	1.69 ~~1.9~~		136											
Drainline	Sta. 63+00 Lt. - 63+00 Rt.	21.36 ~~40~~														

DRAINAGE SUMMARY

PROJECT: HANAMAULU ROAD & APPROACHES

PROJECT NO.: F-051-1(7)

Notes: Stations Refer To Baseline Stations Unless Otherwise Noted.

Pipe Sheet Thickness (C.A.P./C.S.P. Sht. Thk.) is in inches.

FED. ROAD DIST. NO.	STATE	FED. AID PROJ. NO.	FISCAL YEAR	SHEET NO.	TOTAL SHEETS
HAWAII	HAW.	F051-1(7)	1987	31	164

TYPE OF STRUCTURE	STATION (FROM-TO)	24-Inch C.S.P. Sht. Thk., 0.109; 24-Inch R.C.P. Cl. III; Or 24-Inch C.A.P. Sht. Thk., 0.075	24-Inch C.S.P. Sht. Thk., 0.138; 24-Inch R.C.P. Cl. III; Or 24-Inch C.A.P. Sht. Thk., 0.075	24-Inch C.S.P. Sht. Thk., 0.168; 24-Inch R.C.P. Cl. III; Or 24-Inch C.A.P. Sht. Thk., 0.075			24-Inch Spiral Rib Metal Pipe, Sht. Thk. 0.109 or 24-Inch R.C.P. Cl. III, or 24-Inch Spiral rib Al. pipe 0.135	36-Inch C.S.P. Sht. Thk., 0.109; 36-Inch R.C.P. Cl. III; Or 36-Inch C.A.P. Sht. Thk., 0.075				54-Inch C.S.P. Sht. Thk., 0.109; 54-Inch R.C.P. Cl. III; Or 54-Inch C.A.P. Sht. Thk., ~~0.075~~ 0.135	60-Inch Spiral Rib Metal Pipe, Sht. Thk. 0.109 or 60-Inch R.C.P., Cl. III			30-Inch Siphon Pipe	36-Inch Siphon Pipe		Type P Cast Iron Frame And Cover	Type 6214B Steel Frame And Grate	Type Level Steel Frame And Grate	Steel Frame And Grate For Grated Box	Gutter, Type 2 (61218)				Grouted Rubble Paving		18-Inch Slotted Drain Pipe	Concrete Cutoff Ditch, Type I	Concrete Cutoff Ditch, Type II	Concrete Swale	Desilting Basin #1	Desilting Basin #2			Debris Rack		
ITEM NO.		603. 7221	603. 7225	603. 7229			603. 7310	603. 7441				603. 7641	603. 7651			603. 8072	603. 8074		604. 2170	604. 2351	604. 2360	604. 2370	609. 2218				612. 0100		637. 1000	640. 5001	640. 5002	640. 7420	646. 1000	646. 2000			647. 1000		
UNIT USED		Lin Ft	Lin Ft	Lin Ft			Lin Ft	Lin Ft				Lin Ft	Lin Ft			Lin Ft	Lin Ft		Each	Each	Each	Each	Lin Ft				Cu Yd		Lin Ft	Lin Ft	Lin Ft	Lin Ft	L.S.	L.S.			L.S.		
Drain Inlet #1	Sta. 55+06.32 Lt.																			1																			
Drainline	Sta. 55+06.32 Lt. - 55+33 Lt.																																						
Storm Drain Manhole #1	Sta. 55+33 Lt.																		1																				
Drainline	Sta. 57+20 - 57+40							19.5 ~~23~~																															
Storm Drain Manhole #2	Sta. 57+40																		1																				
Drain Inlet #2	Sta. 57+26.07 Lt.																				1																		
Drainline	Sta. 57+26.07 Lt. - 57+40	40 ~~50~~																																					
Drainline	Sta. 57+61 Rt. - 57+40							108.3 ~~110~~																															
Headwall #1	Sta. 57+61 Rt.																										3.27 ~~8.0~~												
Splitter Box #1	Sta. 59+15 Lt.																										4.87 ~~8.0~~												
Siphon	Sta. 59+53.22															199.7 ~~201~~																							
Splitter Box #2	Sta. 59+95 Rt.																										4.37 ~~8.0~~												
18-Inch Slotted Drain	Sta. 57+43 - 59+50																												~~207~~	357									
18-Inch Slotted Drain	Sta. 59+55 - 61+00																												~~145~~										
Grated Box #1	Sta. 61+00																					1																	
Drainline	Sta. 61+00 - 61+00 Rt.	26 ~~32~~																																					
18-Inch Slotted Drain	Sta. 61+05 - 63+00 Lt.																												199.8 ~~198~~										
Grated Box #2	Sta. 63+00 Lt.																					1																	
Drainline	Sta. 63+00 Lt. - 63+00 Rt.	38 ~~44~~																																					

Notes: Stations Refer To Baseline Stations Unless Otherwise Noted.

Pipe sheet thickness (C.A.P./C.S.P. Sht. Thk.) is in inches.

DRAINAGE SUMMARY

PROJECT : HANAMAULU ROAD & APPROACHES

PROJECT NO.: F-051-1(7)

FED. ROAD DIST. NO.	STATE	FED. AID PROJ. NO.	FISCAL YEAR	SHEET NO.	TOTAL SHEETS
HAWAII	HAW.	F051-1(7)	1987	32	164

TYPE OF STRUCTURE	STATION (FROM-TO)	202. 0100 L.S.	206. 2020 Cu Yd Structure Excavation For Drainage System	503. 0025 Cu Yd Concrete In Drainage System (Class A)	508. 0100 Cu Yd Cement Rubble Masonry	602. 1020 Lb Reinforcing Steel For Drainage System	603. 0010 Cu Yd Bed Course Material For Culverts	603. 1012 Lin Ft 30-Inch Reinforced Concrete Pipe, Class III	603. 1016 Lin Ft 42-Inch Reinforced Concrete Pipe, Class III	603. 1018 Lin Ft 48-Inch Reinforced Concrete Pipe, Class III	603. 1020 Lin Ft 54-Inch Reinforced Concrete Pipe, Class III	603. 2085 Lin Ft 24-Inch C.S.P. Sht. Thk., 0.109	603. 3127 Lin Ft 108-Inch Structural Steel Plate Pipe, No. 8 Gage ~~or~~; 0.165 108-Inch C.A.P. Sht. Thk., ~~0.138~~ or 108-Inch C.A.P. Sht. Thk. 0.135 (3"x1")	603. 6001 Lin Ft 24-Inch C.S.P. Sht. Thk., 0.168 Or 24-Inch C.A.P. Sht. Thk., 0.075	603. 6161 Lin Ft 48-Inch C.S.P. Sht. Thk., 0.168 Or 48-Inch C.A.P. Sht. Thk., 0.075	603. 6441 Lin Ft 66-Inch C.S.P. Sht. Thk., 0.168 Or 66-Inch C.A.P. Sht. Thk., ~~0.075~~ 0.105	603. 7201 Lin Ft 24-Inch C.S.P. Sht. Thk., 0.079; 24-Inch R.C.P. Cl. III; Or 24-Inch C.A.P. Sht. Thk., ~~0.075~~ 0.164
18-Inch Slotted Drain	Sta. 63+05 Lt. - 65+50 Lt.		54.20 ~~64~~															
Grated Box #3	Sta. 65+50 Lt.		6.47 ~~6~~	1.50 ~~1.6~~		111												
Drainline	Sta. 65+50 Lt. - 65+50 Rt.		25.56 ~~37~~															
Drain Inlet #3	Sta. 61+00 Rt.		9.93 ~~9~~	2.60 ~~2.1~~		436 ~~381~~												
Drainline	Sta. 61+00 Rt. - 63+00 Rt.		151.29 ~~178~~															
Drain Inlet #5	Sta. 63+00 Rt.		10.15 ~~9~~	2.61 ~~2.1~~		607 ~~380~~												
Drainline	Sta. 63+00 Rt. - 65+50 Rt.		181.62 ~~223~~															
Drain Inlet #6	Sta. 65+50 Rt.		8.40 ~~9~~	2.14 ~~2.1~~		607 ~~548~~												
Drainline	Sta. 65+50 Rt. - 68+00 Rt.		266.05 ~~225~~															246.4 ~~250~~
Drain Inlet #7	Sta. 68+00 Rt.		10.80 ~~23~~	1.77 ~~8.0~~		671 ~~918~~												
Culvert	C.H.R. #1 ℄ Sta. 4+50		31.60 ~~63~~							45.6 ~~45~~								
Headwall #5	C.H.R #1 ℄ Sta. 4+50 Rt.		20.83 ~~30~~		11.52 ~~10~~													
Inlet Sump	C.H.R. #1 ℄ Sta. 4+50 Rt.		45															
Headwall #6	C.H.R. #1 ℄ Sta. 4+50 Lt.		19.35 ~~40~~		8.23 ~~6~~													
Drainline	Sta. 68+00 Rt. - 70+00 Rt.		191.0 ~~206~~															196 ~~200~~
Drain Inlet #9	Sta. 70+00 Rt.		4.98 ~~14~~	1.60 ~~5.0~~		523 ~~537~~												
Drainline	Sta. 70+00 Rt. - 72+00 Rt.		94.47 ~~200~~															196 ~~200~~
Drain Inlet #11	Sta. 72+00 Rt.		6.35 ~~18~~	1.83 ~~5.6~~		520 ~~891~~												
Drainline	Sta. 72+00 Rt. - 73+90 Rt.		84.64 ~~192~~															186 ~~190~~
Drain Inlet #13	Sta. 73+90 Rt.		3.81 ~~25~~	3.46 ~~8.1~~		607 ~~1211~~												
Drainline	Sta. 73+90 Rt. - 73+90 Rt.		8.76 ~~34~~															32 ~~36~~
Drain Inlet #12	Sta. 73+90 Rt.		3.20 ~~27~~	3.12 ~~8.5~~		607 ~~1243~~												
Headwall #2	C.H.R. #1 ℄ Sta. 3+87.48 Rt.		12.67 ~~48~~		4.61 ~~5~~													

DRAINAGE SUMMARY

PROJECT: HANAMAULU ROAD & APPROACHES

PROJECT NO.: F-051-1(7)

Notes: Stations Refer To Baseline Stations Unless Otherwise Noted.

Pipe Sheet Thickness (C.A.P./C.S.P. Sht. Thk.) is in inches.

FED. ROAD DIST. NO.	STATE	FED. AID PROJ. NO.	FISCAL YEAR	SHEET NO.	TOTAL SHEETS
HAWAII	HAW.	F051-1(7)	1987	33	164

ITEM NO.		603. 7221	603. 7225	603. 7229			603. 7310	603. 7441				603. 7641	603. 7651			603. 8072	603. 8074		604. 2170	604. 2351	604. 2360	604. 2370	609. 2218				612. 0100		637. 1000	640. 5001	640. 5002	640. 7420	646. 1000	646. 2000			647. 1000		
UNIT USED		Lin Ft	Lin Ft	Lin Ft			Lin Ft	Lin Ft				Lin Ft	Lin Ft			Lin Ft	Lin Ft		Each	Each	Each	Each	Lin Ft				Cu Yd		Lin Ft	Lin Ft	Lin Ft	Lin Ft	L.S.	L.S.			L.S.		
TYPE OF STRUCTURE	STATION (FROM-TO)	24-Inch C.S.P. Sht. Thk., 0.109; 24-Inch R.C.P. Cl. III; Or 24-Inch C.A.P. Sht. Thk., 0.075	24-Inch C.S.P. Sht. Thk., 0.138; 24-Inch R.C.P. Cl. III; Or 24-Inch C.A.P. Sht. Thk., 0.075	24-Inch C.S.P. Sht. Thk., 0.168; 24-Inch R.C.P. Cl. III; Or 24-Inch C.A.P. Sht. Thk., 0.075			24-Inch Spiral Rib Metal Pipe, Sht. Thk. 0.109 or 24-Inch R.C.P., Cl. III; or 24-inch spiral or 24-inch Aluminum pipe Sht. Thk. 0.105	36-Inch C.S.P. Sht. Thk., 0.109; 36-Inch R.C.P. Cl. III; Or 36-Inch C.A.P. Sht. Thk., 0.075				54-Inch C.S.P. Sht. Thk., 0.109; 54-Inch R.C.P. Cl. III; Or 54-Inch C.A.P. Sht. Thk., ~~0.075~~ 0.135	60-Inch Spiral Rib Metal Pipe, Sht. Thk. 0.109 or 60-Inch R.C.P., Cl. III			30-Inch Siphon Pipe	36-Inch Siphon Pipe		Type P Cast Iron Frame And Cover	Type 6121AB Steel Frame And Grate	Type Level Steel Frame And Grate	Steel Frame And Grate For Grated Box	Gutter, Type 2 (61218)				Grouted Rubble Paving		18-Inch Slotted Drain Pipe	Concrete Cutoff Ditch, Type I	Concrete Cutoff Ditch, Type II	Concrete Swale	Desilting Basin #1	Desilting Basin #2			Debris Rack		
18-Inch Slotted Drain	Sta. 63+05 Lt. - 65+50 Lt.																												~~245~~ 250.50										
Grated Box #3	Sta. 65+50 Lt.																				1	1																	
Drainline	Sta. 65+50 Lt. - 65+50 Rt.	~~40~~ 36.6																																					
Drain Inlet #3	Sta. 61+00 Rt.																				1																		
Drainline	Sta. 61+00 Rt. - 63+00 Rt.	~~200~~ 105																																					
Drain Inlet #5	Sta. 63+00 Rt.																				1																		
Drainline	Sta. 63+00 Rt. - 65+50 Rt.	~~250~~ 245.8																																					
Drain Inlet #6	Sta. 65+50 Rt.																				1																		
Drainline	Sta. 65+50 Rt. - 68+00 Rt.																																						
Drain Inlet #7	Sta. 68+00 Rt.																				1																		
Culvert	C.H.R. #1 ℄ Sta. 4+50																																						
Headwall #5	C.H.R. #1 ℄ Sta. 4+50 Rt.																																						
Inlet Sump	C.H.R. #1 ℄ Sta. 4+50 Rt.																										5.13 ~~5.0~~												
Headwall #6	C.H.R. #1 ℄ Sta. 4+50 Lt.																										4.08 ~~3.0~~												
Drainline	Sta. 68+00 Rt. - 70+00 Rt.																																						
Drain Inlet #9	Sta. 70+00 Rt.																				1																		
Drainline	Sta. 70+00 Rt. - 72+00 Rt.																																						
Drain Inlet #11	Sta. 72+00 Rt.																				1																		
Drainline	Sta. 72+00 Rt. - 73+90 Rt.																																						
Drain Inlet #13	Sta. 73+90 Rt.																				1																		
Drainline	Sta. 73+90 Rt. - 73+90 Rt.									36																													
Drain Inlet #12	Sta. 73+90 Rt.																				1																		
Headwall #2	C.H.R. #1 ℄ Sta. 3+87.48 Rt.																										6.84 ~~6.0~~												

Notes: Stations Refer To Baseline Stations Unless Otherwise Noted.

Pipe sheet thickness (C.A.P./C.S.P. Sht. Thk.) is in inches.

DRAINAGE SUMMARY

PROJECT: HANAMAULU ROAD & APPROACHES

PROJECT NO.: F-051-1(7)

FED. ROAD DIST. NO.	STATE	FED. AID PROJ. NO.	FISCAL YEAR	SHEET NO.	TOTAL SHEETS
HAWAII	HAW.	F051-1(7)	1987	34	164

TYPE OF STRUCTURE	STATION (FROM – TO)	Structure Excavation For Drainage System	Concrete In Drainage System (Class A)	Cement Rubble Masonry	Reinforcing Steel For Drainage System	Bed Course Material For Culverts	30-Inch Reinforced Concrete Pipe, Class III	42-Inch Reinforced Concrete Pipe, Class III	48-Inch Reinforced Concrete Pipe, Class III	54-Inch Reinforced Concrete Pipe, Class III	24-Inch C.S.P. Sht. Thk., 0.109	108-Inch Structural Steel Plate Pipe, No. 8 Gage or, 0.135 108-Inch C.A.P. Sht. Thk., 0.135 ~~0.135~~ or 108-Inch C.A.P., Sht. Thk. 0.135 (3"x1")	24-Inch C.S.P. Sht. Thk., 0.168 Or 24-Inch C.A.P. Sht. Thk., 0.075	48-Inch C.S.P. Sht. Thk., 0.168 Or 48-Inch C.A.P. Sht. Thk., ~~0.075~~ 0.105	66-Inch C.S.P. Sht. Thk., 0.168 Or 66-Inch C.A.P. Sht. Thk., ~~0.075~~ 0.164	24-Inch C.S.P. Sht. Thk., 0.079; 24-Inch R.C.P. Cl. III; Or 24-Inch C.A.P. Sht. Thk., 0.075
ITEM NO.		206. 2020	503. 0025	508. 0100	602. 1020	603. 0010	603. 1012	603. 1016	603. 1018	603. 1020	603. 2085	603. 3127	603. 6001	603. 6161	603. 6441	603. 7201
UNIT USED		Cu Yd	Cu Yd	Cu Yd	Lb	Cu Yd	Lin Ft	Lin Ft	Lin Ft	Lin Ft	Lin Ft	Lin Ft	Lin Ft	Lin Ft	Lin Ft	Lin Ft
Drainline	C.H.R. #1 ℄ Sta. 3+87.48	24.53 ~~90~~						58.7 ~~59~~								
Splitter Box #3	Sta. 74+73 Lt.	43.87 ~~51~~	10.3 ~~11.0~~		866 ~~756~~											
Siphon	Sta. 74+73	33.04 ~~392~~														
Splitter Box #4	Sta. 74+73 Rt.	39.55 ~~37~~	9.01 ~~8.5~~		692 ~~582~~											
Drainline	C.H.R. #1 ℄ Sta. 6+19.14	21.83 ~~68~~					62.4 ~~65~~									
Headwall #3	C.H.R. #1 ℄ Sta. 6+17.48 Rt.	13.43 ~~4.5~~		5.12 ~~4.0~~												
Drainline	Sta. 73+90 Rt. – 78+00 Rt.	200.30 ~~405~~														4.06 ~~410~~
Drain Inlet #14	Sta. 78+00 Rt.	8.17 ~~20~~	2.50 ~~6.7~~		607 ~~1235~~											
Drainline	Sta. 78+00 Rt. – 78+00 Rt.	16.86 ~~32~~														32.4 ~~36~~
Drain Inlet #15	Sta. 78+00 Rt.	8.51 ~~11~~	2.58 ~~2.7~~		416 ~~562~~											
Drainline	Sta. 78+00 Rt. – 81+75 Rt.	266.81 ~~370~~														372.7 ~~375~~
Drain Inlet #16	Sta. 81+75 Rt.	8.24 ~~18~~	2.29 ~~5.6~~		446 ~~892~~											
Drainline	Sta. 81+75 Rt. – 85+50 Rt.	267.96 ~~376~~														370.8 ~~375~~
Drain Inlet #17	Sta. 85+50 Rt.	12.41 ~~23~~	2.6 ~~7.4~~		554 ~~1292~~											
Drainline	Sta. 85+50 Rt. – 85+50 Rt.	33.10 ~~35~~														31.3 ~~36~~
Drain Inlet #18	Sta. 85+50 Rt.	18.28 ~~12~~	1.55 ~~2.8~~		436 ~~587~~											
Drainline	Sta. 85+50 Rt. – 89+25 Rt.	319.60 ~~379~~														
Drain Inlet #19	Sta. 89+25 Rt.	8.20 ~~18~~	3.17 ~~5.7~~		511 ~~902~~											
Drainline	Sta. 89+25 Rt. – 93+25 Rt.	270.88 ~~358~~														
Drain Inlet #20	Sta. 93+25 Rt.	10.47 ~~35~~	5.32 ~~10.5~~		2618 ~~1543~~											
Drainline	Sta. 93+25 Rt. – 93+25 Rt.	53.09 ~~39~~														40
Drain Inlet #21	Sta. 93+25 Rt.	22.34 ~~11~~	2.83 ~~3.1~~		351 ~~579~~											
Splitter Box #5	Sta. 93+10 Lt.	48 ~~31~~	8.39 ~~6.5~~		527 ~~448~~											

DRAINAGE SUMMARY

PROJECT: HANAMAULU ROAD & APPROACHES

PROJECT NO.: F-051-1(7)

Notes: Stations Refer To Baseline Stations Unless Otherwise Noted.

Pipe Sheet Thickness (C.A.P./C.S.P. Sht. Thk.) is in inches.

FED. ROAD DIST. NO.	STATE	FED. AID PROJ. NO.	FISCAL YEAR	SHEET NO.	TOTAL SHEETS
HAWAII	HAW.	F051-1(7)	1987	35	164

TYPE OF STRUCTURE	STATION (FROM-TO)	24-Inch C.S.P. Sht. Thk., 0.109; 24-Inch R.C.P. Cl. III; Or 24-Inch C.A.P. Sht. Thk., 0.075	24-Inch C.S.P. Sht. Thk., 0.138; 24-Inch R.C.P. Cl. III; Or 24-Inch C.A.P. Sht. Thk., 0.075	24-Inch C.S.P. Sht. Thk., 0.168; 24-Inch R.C.P. Cl. III; Or 24-Inch C.A.P. Sht. Thk., 0.075			24-Inch Spiral Rib Metal Pipe Sht. Thk. 0.109 or 24-Inch R.C.P., Cl. III; or 24-inch spiral rib Alumn. Pipe Sht. Thk. 0.105	36-Inch C.S.P. Sht. Thk., 0.109; 36-Inch R.C.P. Cl. III; Or 36-Inch C.A.P. Sht. Thk., 0.075				54-Inch C.S.P. Sht. Thk., 0.109; 54-Inch R.C.P. Cl. III; Or 54-Inch C.A.P. Sht. Thk., 0.075 0.135	60-Inch Spiral Rib Metal Pipe Sht. Thk. 0.109 or 60-Inch R.C.P., Cl. III or 60-inch Spiral Rib Aluminum Pipe Sht. Thk. 0.108			30-Inch Siphon Pipe	36-Inch Siphon Pipe		Type P Cast Iron Frame And Cover	Type 6I214B Steel Frame And Grate	Type Level Steel Frame And Grate	Steel Frame And Grate For Grated Box	Gutter, Type 2 (61218)				Grouted Rubble Paving		18-Inch Slotted Drain Pipe	Concrete Cutoff Ditch, Type I	Concrete Cutoff Ditch, Type II	Concrete Swale	Desilting Basin # 1	Desilting Basin # 2			Debris Rack		
ITEM NO.		603. 7221	603. 7225	603. 7229			603. 7310	603. 7441				603. 7641	603. 7651			603. 8072	603. 8074		604. 2170	604. 2351	604. 2360	604. 2370	609. 2218				612. 0100		637. 1000	640. 5001	640. 5002	640. 7420	646. 1000	646. 2000			647. 1000		
UNIT USED		Lin Ft	Lin Ft	Lin Ft			Lin Ft	Lin Ft				Lin Ft	Lin Ft			Lin Ft	Lin Ft		Each	Each	Each	Each	Lin Ft				Cu Yd		Lin Ft	Lin Ft	Lin Ft	Lin Ft	L.S.	L.S.			L.S.		
Drainline	C.H.R. #1 ℄ Sta. 3+87.48																																					
Splitter Box #3	Sta. 74+73 Lt.																										10.53 ~~8.0~~											
Siphon	Sta. 74+73															222.6 ~~234~~																						
Splitter Box #4	Sta. 74+73 Rt.																										5.73 ~~8.0~~											
Drainline	C.H.R. #1 ℄ Sta. 6+19.14																																					
Headwall #3	C.H.R. #1 ℄ Sta. 6+17.48 Rt.																										2.29 ~~7.0~~											
Drainline	Sta. 73+90 Rt. - 78+00 Rt.																																					
Drain Inlet #14	Sta. 78+00 Rt.																				1																	
Drainline	Sta. 78+00 Rt. - 78+00 Rt.																																					
Drain Inlet #15	Sta. 78+00 Rt.																				1																	
Drainline	Sta. 78+00 Rt. - 81+75 Rt.																																					
Drain Inlet #16	Sta. 81+75 Rt.																				1																	
Drainline	Sta. 81+75 Rt. - 85+50 Rt.																																					
Drain Inlet #17	Sta. 85+50 Rt.																				1																	
Drainline	Sta. 85+50 Rt. - 85+50 Rt.																																					
Drain Inlet #18	Sta. 85+50 Rt.																				1																	
Drainline	Sta. 85+50 Rt. - 89+25 Rt.	570 ~~375~~																																				
Drain Inlet #19	Sta. 89+25 Rt.																				1																	
Drainline	Sta. 89+25 Rt. - 93+25 Rt.	525.5 ~~400~~																																				
Drain Inlet #20	Sta. 93+25 Rt.																				1																	
Drainline	Sta. 93+25 Rt. - 93+25 Rt.	~~44~~ See Sheet No. 34																																				
Drain Inlet #21	Sta. 93+25 Rt.																			1																		
Splitter Box #5	Sta. 93+10 Lt.																										2.74 ~~4.0~~											

Notes: Stations Refer To Baseline Stations Unless Otherwise Noted.

Pipe sheet thickness (C.A.P./C.S.P. Sht. Thk.) is in inches.

DRAINAGE SUMMARY

PROJECT: HANAMAULU ROAD & APPROACHES

PROJECT NO.: F-051-1(7)

FED. ROAD DIST. NO.	STATE	FED. AID PROJ. NO.	FISCAL YEAR	SHEET NO.	TOTAL SHEETS
HAWAII	HAW.	F051-1(7)	1987	36	164

TYPE OF STRUCTURE	STATION (FROM-TO)	Structure Excavation For Drainage System	Concrete In Drainage System (Class A)	Cement Rubble Masonry	Reinforcing Steel For Drainage System	Bed Course Material For Culverts	30-Inch Reinforced Concrete Pipe, Class III	42-Inch Reinforced Concrete Pipe, Class III	48-Inch Reinforced Concrete Pipe, Class III	54-Inch Reinforced Concrete Pipe, Class III	24-Inch C.S.P. Sht. Thk., 0.109	108-Inch Structural Steel Plate Pipe, No. 8 Gage or; 108-Inch C.A.P. Sht. Thk., 0.135 or 105-Inch C.A.P. Sht. Thk. 0.135 (3"x1")	24-Inch C.S.P. Sht. Thk., 0.168 Or 24-Inch C.A.P. Sht. Thk., 0.075	48-Inch C.S.P. Sht. Thk., 0.168 Or 48-Inch C.A.P. Sht. Thk., 0.075 0.105	66-Inch C.S.P. Sht. Thk., 0.168 Or 66-Inch C.A.P. Sht. Thk., 0.075 0.164	24-Inch C.S.P. Sht. Thk., 0.079; 24-Inch R.C.P. Cl. III; Or 24-Inch C.A.P. Sht. Thk., 0.075
ITEM NO.		206. 2020	503. 0025	508. 0100	602. 1020	603. 0010	603. 1012	603. 1016	603. 1018	603. 1020	603. 2085	603. 3127	603. 6001	603. 6161	603. 6441	603. 7201
UNIT USED		Cu Yd	Cu Yd	Cu Yd	Lb	Cu Yd	Lin Ft	Lin Ft	Lin Ft	Lin Ft	Lin Ft	Lin Ft	Lin Ft	Lin Ft	Lin Ft	Lin Ft
Siphon	Sta. 93+10	576.6 ~~352~~														
Splitter Box #6	Sta. 93+10 Rt.	88.00 ~~48~~	11.55 ~~10.0~~		780 ~~719~~											
Drainline	Sta. 93+25 Rt. - 95+50 Rt.	221.50 ~~321~~														
Drain Inlet #22	Sta. 95+50 Rt.	24.66 ~~34~~	11.15 ~~11.6~~		3207 ~~2347~~											
Drainline	Sta. 95+50 Rt. - D.B. #1	508.29 ~~349~~														
Desilting Basin #1	Sta. 95+25															
Drainline	Sta. 95+50 Rt. - 100+15 Rt.	754.91 ~~1068~~								459.5 ~~465~~						
Drainline	Sta. 112+47.75 - D.B. #2	313.84 ~~95~~						120								
Drainline	Sta. 112+47 Rt. - 115+65 Rt.	454.42 ~~419~~														
Drain Inlet #29	Sta. 115+65 Rt.	25 ~~24~~	7.70 ~~6.3~~		806 ~~1199~~											
Drainline	Sta. 115+65 Rt. - 115+65 Rt.	62.10 ~~36~~														40 ~~44~~
Drain Inlet #30	Sta. 115+65 Rt.	17.33 ~~46~~	8.34 ~~10.8~~		338 ~~1130~~											
Splitter Box #8	Sta. 115+81.86 Lt.	82.36 ~~46~~	13.87 ~~9.5~~		568 ~~674~~											
Desilting Basin #2	Sta. 113+65															
Siphon	Sta. 115+81.86	464.01 ~~604~~														
Splitter Box #9	Sta. 115+81.86 Rt.	78.78 ~~50~~	15.80 ~~10.7~~		873 ~~757~~											
Drainline	Sta. 115+65 Rt. - 119+00 Rt.	356.61 ~~346~~														332.5 ~~335~~
Drain Inlet #31	Sta. 119+00 Rt.	14.86 ~~12~~	2.40 ~~2.6~~		418 ~~441~~											

DRAINAGE SUMMARY

PROJECT: HANAMAULU ROAD & APPROACHES

PROJECT NO.: F-051-1(7)

Notes: Stations Refer To Baseline Stations Unless Otherwise Noted.

Pipe Sheet Thickness (C.A.P./C.S.P. Sht. Thk.) is in inches.

FED. ROAD DIST. NO.	STATE	FED. AID PROJ. NO.	FISCAL YEAR	SHEET NO.	TOTAL SHEETS
HAWAII	HAW.	F051-1(7)	1987	37	164

TYPE OF STRUCTURE	STATION (FROM-TO)	603. 7221 Lin Ft: 24-inch C.S.P. Sht. Thk., 0.109; 24-inch R.C.P. Cl. III; Or 24-inch C.A.P. Sht. Thk., 0.075	603. 7225 Lin Ft: 24-inch C.S.P. Sht. Thk., 0.138; 24-inch R.C.P. Cl. III; Or 24-inch C.A.P. Sht. Thk., 0.075	603. 7229 Lin Ft: 24-inch C.S.P. Sht. Thk., 0.168; 24-inch R.C.P. Cl. III; Or 24-inch C.A.P. Sht. Thk., 0.075	603 7311 Lin Ft: 24-inch Spiral Rib Aluminum Pipe Sht. Thk. 0.075		603. 7310 Lin Ft: 24-Inch Spiral Rib Metal Pipe, Sht. Thk. 0.109 or 24-Inch R.C.P., Cl. III; 24-inch Spiral Rib Alum. Pipe Sht. Thk. 0.105	603. 7441 Lin Ft: 36-inch C.S.P. Sht. Thk., 0.109; 36-inch R.C.P. Cl. III; Or 36-inch C.A.P. Sht. Thk., 0.075				603. 7641 Lin Ft: 54-inch C.S.P. Sht. Thk. 0.109; 54-inch R.C.P. Cl. III; Or 54-inch C.A.P. Sht. Thk., ~~0.075~~ 0.135	603. 7651 Lin Ft: 60-inch Spiral Rib Metal Pipe, Sht. Thk. 0.109 or 60-inch R.C.P., Cl. III or 60-inch Spiral Rib Alum. Pipe Sht. Thk. 0.105			603. 8072 Lin Ft: 30-Inch Siphon Pipe	603. 8074 Lin Ft: 36-Inch Siphon Pipe		604. 2170 Each: Type P Cast Iron Frame And Cover	604. 2351 Each: Type 6214B Steel Frame And Grate	604. 2360 Each: Type Level Steel Frame And Grate	604. 2370 Each: Steel Frame And Grate For Grated Box	609. 2218 Lin Ft: Gutter, Type 2 (6121B)				612. 0100 Cu Yd: Grouted Rubble Paving		637. 1000 Lin Ft: 18-Inch Slotted Drain Pipe	640 5001 Lin Ft: Concrete Cutoff Ditch, Type I	640 5002 Lin Ft: Concrete Cutoff Ditch, Type II	640 7420 Lin Ft: Concrete Swale	646. 1000 L.S.: Desilting Basin #1	646. 2000 L.S.: Desilting Basin #2			647. 1000 L.S.: Debris Rack		
		~~110~~																																					
Siphon	Sta. 93+10															~~6423~~ ~~245~~																							
Splitter Box #6	Sta. 93+10 Rt.																									6.76 ~~8.0~~													
Drainline	Sta. 93+25 Rt. - 95+50 Rt.	~~220~~ ~~225~~																																					
Drain Inlet #22	Sta. 95+50 Rt.																				1																		
Drainline	Sta. 95+50 Rt. - D.B. #1											133																											
Desilting Basin #1	Sta. 95+25																															1							
Drainline	Sta. 95+50 Rt. - 100+15 Rt.																																						
Drainline	Sta. 112+47.75 - D.B. # 2																																						
Drainline	Sta. 112+47 Rt. - 115+65 Rt.				~~313.4~~		~~318~~																																
Drain Inlet #29	Sta. 115+65 Rt.																				1																		
Drainline	Sta. 115+65 Rt. - 115+65 Rt.																																						
Drain Inlet #30	Sta. 115+65 Rt.																			1																			
Splitter Box #8	Sta. 115+81.86 Lt.																									5.73 ~~8.0~~													
Desilting Basin #2	Sta. 113+65																																1						
Siphon	Sta. 115+81.86															~~6223.5~~ ~~290~~																							
Splitter Box #9	Sta. 115+81.86 Rt.																									6.04 ~~8.0~~													
Drainline	Sta. 115+65 Rt. - 119+00 Rt.																																						
Drain Inlet #31	Sta. 119+00 Rt.																				1																		

Notes: Stations Refer To Baseline Stations Unless Otherwise Noted.

Pipe sheet thickness (C.A.P./C.S.P. Sht. Thk.) is in inches.

DRAINAGE SUMMARY

PROJECT: HANAMAULU ROAD & APPROACHES

PROJECT NO.: F-051-1(7)

FED. ROAD DIST. NO.	STATE	FED. AID PROJ. NO.	FISCAL YEAR	SHEET NO.	TOTAL SHEETS
HAWAII	HAW.	F051-1(7)	1987	38	164

TYPE OF STRUCTURE	STATION (FROM-TO)	Structure Excavation For Drainage System	Concrete In Drainage System (Class A)	Cement Rubble Masonry	Reinforcing Steel For Drainage System	Bed Course Material For Culverts	30-Inch Reinforced Concrete Pipe, Class III	42-Inch Reinforced Concrete Pipe, Class III	48-Inch Reinforced Concrete Pipe, Class III	54-Inch Reinforced Concrete Pipe, Class III	24-Inch C.S.P. Sht. Thk., 0.109	108-Inch Structural Steel Plate Pipe, No. 8 Gage ~~or~~ 108-Inch C.A.P. Sht. Thk., ~~0.135~~ 0.125 or 108-Inch C.A.P. Sht. Thk. 0.135 (3"x1")	24-Inch C.S.P. Sht. Thk., 0.168 Or 24-Inch C.A.P. Sht. Thk., 0.075	48-Inch C.S.P. Sht. Thk., 0.168 Or 48-Inch C.A.P. Sht. Thk., ~~0.075~~ 0.105	66-Inch C.S.P. Sht. Thk., 0.168 Or 66-Inch C.A.P. Sht. Thk., ~~0.075~~ 0.164	24-Inch C.S.P. Sht. Thk., 0.079; 24-Inch R.C.P. Cl. III; Or 24-Inch C.A.P. Sht. Thk., 0.075
ITEM NO.		206. 2020	503. 0025	508. 0100	602. 1020	603. 0010	603. 1012	603. 1016	603. 1018	603. 1020	603. 2085	603. 3127	603. 6001	603. 6161	603. 6441	603. 7201
UNIT USED		Cu Yd	Cu Yd	Cu Yd	Lb	Cu Yd	Lin Ft	Lin Ft	Lin Ft	Lin Ft	Lin Ft	Lin Ft	Lin Ft	Lin Ft	Lin Ft	Lin Ft
Splitter Box #10	Sta. 117+23.98 Rt.	59.78 ~~49~~	10.39 ~~10.7~~		815 ~~753~~											
Siphon	Sta. 117+40 Rt.	40.50 ~~51~~														
Splitter Box #11	Sta. 117+58.62 Rt.	49 ~~48~~	10.38 ~~10.5~~		889 ~~743~~											
Splitter Box #12	Sta. 120+09.03 Lt.	81.84 ~~48~~	6.08 ~~10.5~~		788 ~~743~~											
Siphon	Sta. 120+25	83.04 ~~37~~														
Splitter Box #13	Sta. 120+34 Lt.	65.37 ~~48~~	11.43 ~~10.4~~		~~737~~											
Siphon	Sta. 120+80.10	415.88 ~~418~~														
Splitter Box #14	Sta. 121+23 Rt.	77.05 ~~46~~	12.57 ~~9.9~~		808 ~~712~~											
Splitter Box #23	Sta. 132+50 Lt.	58.07 ~~51~~	10.06 ~~11.0~~		885 ~~765~~											
Drain Inlet #33	Sta. 126+00 Rt.	7.46 ~~11~~	2.22 ~~2.7~~		458 ~~565~~											
Drainline	Sta. 126+00 Rt. - 126+00 Rt.	21.35 ~~36~~														
Drain Inlet #32	Sta. 126+00 Rt.	5.11 ~~11~~	2.38 ~~2.7~~		517 ~~740~~											
Drainline	Sta. 126+00 Rt. - 128+80 Rt.	191.08 ~~248~~														
Drain Inlet #34	Sta. 128+80 Rt.	8.73 ~~9~~	2.6 ~~2.0~~		414 ~~539~~											
Splitter Box #15	Sta. 128+70 Lt.	124.80 ~~42~~	13.35 ~~8.4~~		737 ~~590~~											
Siphon	Sta. 128+70	240.83 ~~280~~														
Splitter Box #16	Sta. 128+70 Rt.	60.31 ~~46~~	12.50 ~~9.9~~		757 ~~712~~											
Siphon	Sta. 132+50	378 ~~476~~														
Drainline	Sta. 128+80 Rt. - 131+00 Lt.	284.38 ~~191~~														
Splitter Box #24	Sta. 132+50 Rt.	118.30 ~~52~~	16.05 ~~11.0~~		838 ~~770~~											
Drain Inlet #35	Sta. 131+00 Lt.	13.73 ~~15~~	5.90 ~~4.3~~		600 ~~1006~~											
Drainline	Sta. 131+00 Lt. - 131+00 Rt.	60.4 ~~54~~														
Drain Inlet #36	Sta. 131+00 Rt.	14.08 ~~14~~	3.26 ~~2.8~~		466 ~~648~~											
Drainline	Sta. 131+00 Lt. - 133+00 Lt.	207.14 ~~200~~														
Drain Inlet #36A	Sta. 133+00 Lt.	12.4 ~~11~~	2.77 ~~3.1~~		500 ~~656~~											
Drainline	Sta. 133+00 Lt. - 135+05 Lt.	163.71 ~~201~~														

DRAINAGE SUMMARY

PROJECT: HANAMAULU ROAD & APPROACHES

PROJECT NO.: F-051-1(7)

Notes: Stations Refer To Baseline Stations Unless Otherwise Noted.

Pipe Sheet Thickness (C.A.P./C.S.P. Sht. Thk.) is in inches.

FED. ROAD DIST. NO.	STATE	FED. AID PROJ. NO.	FISCAL YEAR	SHEET NO.	TOTAL SHEETS
HAWAII	HAW.	F051-1(7)	1987	39	164

TYPE OF STRUCTURE	STATION (FROM-TO)	24-inch C.S.P. Sht. Thk., 0.109; 24-inch R.C.P. Cl. III; Or 24-inch C.A.P. Sht. Thk., 0.075	24-inch C.S.P. Sht. Thk., 0.138; 24-inch R.C.P. Cl. III; Or 24-inch C.A.P. Sht. Thk., 0.075	24-inch C.S.P. Sht. Thk., 0.168; 24-inch R.C.P. Cl. III; Or 24-inch C.A.P. Sht. Thk., 0.075	24-inch Spiral Rib Alumn. Pipe Sht. Thk. 0.075		24-inch Spiral Rib Metal Pipe, Sht. Thk. 0.109 or ~~24-inch R.C.P., Cl. III;~~ or 24-inch Spiral Rib Alumn. Pipe ~~Sht. Thk. 0.105~~	36-inch C.S.P. Sht. Thk., 0.109; 36-inch R.C.P. Cl. III; Or 36-inch C.A.P. Sht. Thk., 0.075				54-inch C.S.P. Sht. Thk., 0.109; 54-inch R.C.P. Cl. III; Or 0.135 ~~54-inch C.A.P. Sht. Thk., 0.075~~	60-inch Spiral Rib Metal Pipe, Sht. Thk. 0.109 or ~~60-inch R.C.P., Cl. III~~ or	60-inch Spiral Rib Alumn. Pipe ~~Sht. Thk. 0.105~~		30-inch Siphon Pipe	36-inch Siphon Pipe		Type P Cast Iron Frame And Cover	Type 6121 4B Steel Frame And Grate	Type Level Steel Frame And Grate	Steel Frame And Grate For Grated Box	Gutter, Type 2 (61218)				Grouted Rubble Paving		18-Inch Slotted Drain Pipe	Concrete Cutoff Ditch, Type I	Concrete Cutoff Ditch, Type II	Concrete Swale	Desilting Basin #1	Desilting Basin #2			Debris Rack		
ITEM NO.		603. 7221	603. 7225	603. 7229	603. 7311		603. 7310	603. 7441				603. 7641	603. 7651			603. 8072	603. 8074		604. 2170	604. 2351	604. 2360	604. 2370	609. 2218				612. 0100		637. 1000	640 5001	640 5002	640 7420	646. 1000	646. 2000			647. 1000		
UNIT USED		Lin Ft	Lin Ft	Lin Ft	Lin Ft		Lin Ft	Lin Ft				Lin Ft	Lin Ft			Lin Ft	Lin Ft		Each	Each	Each	Each	Lin Ft				Cu Yd		Lin Ft	Lin Ft	Lin Ft	Lin Ft	L.S.	L.S.			L.S.		
Splitter Box #10	Sta. 117+23.98 Rt.																										4.76 ~~8.0~~												
Siphon	Sta. 117+40 Rt.															45.8 ~~46~~																							
Splitter Box #11	Sta. 117+58.62 Rt.																										4.75 ~~8.0~~												
Splitter Box #12	Sta. 120+09.03 Lt.																										4.57 ~~8.0~~												
Siphon	Sta. 120+25															31.8 ~~32~~																							
Splitter Box #13	Sta. 120+34 Lt.																										4.76 ~~8.0~~												
Siphon	Sta. 120+80.10															286.7 ~~292~~																							
Splitter Box #14	Sta. 121+23 Rt.																										8.86 ~~8.0~~												
Splitter Box #23	Sta. 132+50 Lt.																										2.55 ~~8.0~~												
Drain Inlet #33	Sta. 126+00 Rt.																				1																		
Drainline	Sta. 126+00 Rt. – 126+00 Rt.	37 ~~40~~																																					
Drain Inlet #32	Sta. 126+00 Rt.																				1																		
Drainline	Sta. 126+00 Rt. – 128+80 Rt.	274.5 ~~280~~																																					
Drain Inlet #34	Sta. 128+80 Rt.																				1																		
Splitter Box #15	Sta. 128+70 Lt.																										7.38 ~~8.0~~												
Siphon	Sta. 128+70															172.4 ~~177~~																							
Splitter Box #16	Sta. 128+70 Rt.																										4.06 ~~8.0~~												
Siphon	Sta. 132+50																170.5 ~~175~~																						
Drainline	Sta. 128+80 Rt. – 131+00 Lt.	216.8 ~~220~~																																					
Splitter Box #24	Sta. 132+50 Rt.																										5.02 ~~8.0~~												
Drain Inlet #35	Sta. 131+00 Lt.																			1																			
Drainline	Sta. 131+00 Lt. – 131+00 Rt.	52.2 ~~56~~																																					
Drain Inlet #36	Sta. 131+00 Rt.																				1																		
Drainline	Sta. 131+00 Lt. – 133+00 Lt.				196.5		~~200~~																																
Drain Inlet #36A	Sta. 133+00 Lt.																			1																			
Drainline	Sta. 133+00 Lt. – 135+05 Lt.				206.2		~~205~~																																

196.5
206.5

Notes: Stations Refer To Baseline Stations Unless Otherwise Noted.

Pipe sheet thickness (C.A.P./C.S.P. Sht. Thk.) is in inches.

DRAINAGE SUMMARY

PROJECT: HANAMAULU ROAD & APPROACHES

PROJECT NO.: F-051-1(7)

FED. ROAD DIST. NO.	STATE	FED. AID PROJ. NO.	FISCAL YEAR	SHEET NO.	TOTAL SHEETS
HAWAII	HAW.	F051-1(7)	1987	40	164

TYPE OF STRUCTURE	STATION (FROM-TO)	Structure Excavation For Drainage System	Concrete In Drainage System (Class A)	Cement Rubble Masonry	Reinforcing Steel For Drainage System	Bed Course Material For Culverts	30-Inch Reinforced Concrete Pipe, Class III	42-Inch Reinforced Concrete Pipe, Class III	48-Inch Reinforced Concrete Pipe, Class III	54-Inch Reinforced Concrete Pipe, Class III	24-Inch C.S.P. Sht. Thk., 0.109	108-Inch Structural Steel Plate Pipe, No. 8 Gage or 108-Inch C.A.P. Sht. Thk., ~~0.135~~ 0.125 or 108-Inch C.A.P. Sht. Thk 0.135 (3" x 1")	24-Inch C.S.P. Sht. Thk., 0.168 Or 24-Inch C.A.P. Sht. Thk., 0.075	48-Inch C.S.P. Sht. Thk., 0.168 Or 48-Inch C.A.P. Sht. Thk., ~~0.075~~ 0.105	66-Inch C.S.P. Sht. Thk., 0.168 Or 66-Inch C.A.P. Sht. Thk., ~~0.075~~ 0.104	24-Inch C.S.P. Sht. Thk., 0.079; 24-Inch R.C.P. Cl. III; Or 24-Inch C.A.P. Sht. Thk., 0.075
ITEM NO.		206. 2020	503. 0025	508. 0100	602. 1020	603. 0010	603. 1012	603. 1016	603. 1018	603. 1020	603. 2085	603. 3127	603. 6001	603. 6161	603. 6441	603. 7201
UNIT USED		Cu Yd	Cu Yd	Cu Yd	Lb	Cu Yd	Lin Ft	Lin Ft	Lin Ft	Lin Ft	Lin Ft	Lin Ft	Lin Ft	Lin Ft	Lin Ft	Lin Ft
Storm Drain Manhole #4	Sta. 135+05 Lt.	21.20 ~~15~~	4.13 ~~4.3~~		1096 ~~931~~											
Drainline	Sta. 135+05 Lt. – 135+05 Rt.	75.81 ~~66~~														
Drain Inlet #37A	Sta. 135+05 Rt.	15.02 ~~11~~	2.77 ~~2.7~~		492 ~~567~~											
Drainline	Sta. 135+05 Lt. – 135+17.88 Lt.	12.74 ~~12~~														
Drain Inlet #37	Sta. 135+17.88 Lt.	44.58 ~~39~~	11.26 ~~15.2~~		6327 ~~4505~~											
Junction Box	Sta. 134+99.27 Lt	55 ~~14~~	5.56 ~~6.0~~		637 ~~409~~											
Drainline	Sta. 134+99.27 Lt – 135+17.88 Lt.	54.70 ~~106~~														
Splitter Box #21	C.H.R. #3 Sta. 1+63.91 Rt.	34.13 ~~28~~	6.6 ~~6.7~~		470 ~~438~~											
Siphon	C.H.R. #3 Sta. 1+63.91	72.16 ~~86~~														
Splitter Box #22	C.H.R. #3 Sta. 1+63.91 Lt.	35.03 ~~46~~	5.77 ~~10.2~~		778 ~~729~~											
Drainline	Sta. 135+17.88 Lt. – 138+00 Lt.	632.66 ~~695~~														
Drain Inlet #38	Sta. 138+00 Lt.	27.55 ~~30~~	5.65 ~~12.1~~		4050 ~~2359~~											
Drainline	Sta. 138+00 Lt. – 138+00 Rt.	55.2 ~~63~~														
Drain Inlet #39	Sta. 138+00 Rt.	9.07 ~~11~~	2.56 ~~2.7~~		404 ~~562~~											
Drainline	Sta. 138+00 Lt. – 143+00 Lt.	1336.36 ~~1232~~														
Drain Inlet #41	Sta. 143+00	52.80 ~~45~~	12.10 ~~13.3~~		4021 ~~3294~~											
Drainline	Sta. 143+00 – 143+00 Lt.	76.57 ~~65~~														
Drain Inlet #40	Sta. 143+00 Lt.	18.87 ~~10~~	3.18 ~~2.6~~		487 ~~550~~											
Drainline	Sta. 143+00 – 143+00 Rt.	15.51 ~~50~~														
Drain Inlet #42	Sta. 143+00 Rt.	20.04 ~~11~~	2.46 ~~2.7~~		400 ~~565~~											
Drainline	Sta. 143+00 – 147+35 Rt.	968.57 ~~1195~~														
Drain Inlet #43	Sta. 147+35 Rt.	15.17 ~~37~~	11.41 ~~11.5~~		4035 ~~2825~~											
Drainline	Sta. 147+35 Rt. – 147+35 Rt.	19.11 ~~32~~														

DRAINAGE SUMMARY

PROJECT: HANAMAULU ROAD & APPROACHES

PROJECT NO.: F-051-1(7)

Notes: Stations Refer To Baseline Stations Unless Otherwise Noted.

Pipe Sheet Thickness (C.A.P./C.S.P. Sht. Thk.) is in inches.

FED. ROAD DIST. NO.	STATE	FED. AID PROJ. NO.	FISCAL YEAR	SHEET NO.	TOTAL SHEETS
HAWAII	HAW.	F051-1(7)	1987	41	164

TYPE OF STRUCTURE	STATION (FROM-TO)	24-inch C.S.P. Sht. Thk., 0.109; 24-inch R.C.P. Cl. III; Or 24-inch C.A.P. Sht. Thk., 0.075	24-inch C.S.P. Sht. Thk., 0.138; 24-inch R.C.P. Cl. III; Or 24-inch C.A.P. Sht. Thk., 0.075	24-inch C.S.P. Sht. Thk., 0.168; 24-inch R.C.P. Cl. III; Or 24-inch C.A.P. Sht. Thk., 0.075	24-inch Spiral Rib Alumn. Pipe Sht. Thk. 0.075		24-Inch Spiral Rib Metal Pipe, Sht. Thk. 0.109 or 24-Inch R.C.P., Cl. III; or 24-Inch Spiral Rib Alumn. Pipe Sht. Thk. 0.105	36-inch C.S.P. Sht. Thk., 0.109; 36-inch R.C.P. Cl. III; Or 36-inch C.A.P. Sht. Thk., 0.075			48-inch C.S.P. Sht. Thk. 0.109; 48-inch R.C.P. Cl. III; or 48-inch C.A.P. Sht. Thk. 0.105	54-inch C.S.P. Sht. Thk., 0.109, 54-inch R.C.P. Cl. III; Or 0.135 54-inch C.A.P. Sht. Thk., 0.075	60-Inch Spiral Rib Metal Pipe, Sht. Thk. 0.109 or 60-Inch R.C.P., Cl. III or 60-Inch Spiral Rib Alumn. Pipe Sht. Thk. 0.105			30-Inch Siphon Pipe	36-Inch Siphon Pipe		Type P Cast Iron Frame And Cover	Type 6121 4B Steel Frame And Grate	Type Level Steel Frame And Grate	Steel Frame And Grate For Grated Box	Gutter, Type 2 (61218)				Grouted Rubble Paving		18-Inch Slotted Drain Pipe	Concrete Cutoff Ditch, Type I	Concrete Cutoff Ditch, Type II	Concrete Swale	Desilting Basin #1	Desilting Basin #2			Debris Rack		
ITEM NO.		603. 7221	603. 7225	603. 7229	603. ~~7311~~		603. 7310	603. 7441			603. 7631	603. 7641	603. 7651			603. 8072	603. 8074		604. 2170	604. 2351	604. 2360	604. 2370	609. 2218				612. 0100		637. 1000	640. 5001	640. 5002	640. 7420	646. 1000	646. 2000			647. 1000		
UNIT USED		Lin Ft	Lin Ft	Lin Ft	Lin Ft		Lin Ft	Lin Ft			Lin Ft	Lin Ft	Lin Ft			Lin Ft	Lin Ft		Each	Each	Each	Each	Lin Ft				Cu Yd		Lin Ft	Lin Ft	Lin Ft	Lin Ft	L.S.	L.S.			L.S.		
Storm Drain Manhole #4	Sta. 135+05 Lt.																		1																			
Drainline	Sta. 135+05 Lt. – 135+05 Rt.	64.3 ~~69~~																																				
Drain Inlet #37A	Sta. 135+05 Rt.																				1																	
Drainline	Sta. 135+05 Lt. – 135+17.88 Lt.				12.0 ~~15~~		~~13~~																															
Drain Inlet #37	Sta. 135+17.88 Lt.																			1																		
Junction Box	Sta. 134+99.27 Lt.																				1																	
Drainline	Sta. 134+99.27 Lt – 135+17.88 Lt										32.2 ~~34~~																											
Splitter Box #21	C.H.R. #3 Sta. 1+63.91 Rt.																									2.23 ~~4.0~~												
Siphon	C.H.R. #3 Sta. 1+63.91															63.8 ~~64~~																						
Splitter Box #22	C.H.R. #3 Sta. 1+63.91 Lt.																									4.71 ~~8.0~~												
Drainline	Sta. 135+17.88 Lt. – 138+00 Lt.												277 ~~282~~																									
Drain Inlet #38	Sta. 138+00 Lt.																			1																		
Drainline	Sta. 138+00 Lt. – 138+00 Rt.	61 ~~67~~																																				
Drain Inlet #39	Sta. 138+00 Rt.																				1																	
Drainline	Sta. 138+00 Lt. – 143+00 Lt.												495.7 ~~500~~																									
Drain Inlet #41	Sta. 143+00																			1																		
Drainline	Sta. 143+00 – 143+00 Lt.		63 ~~56~~																																			
Drain Inlet #40	Sta. 143+00 Lt.																				1																	
Drainline	Sta. 143+00 – 143+00 Rt.		50																																			
Drain Inlet #42	Sta. 143+00 Rt.																				1																	
Drainline	Sta. 143+00 – 147+35 Rt.												430.8 ~~435~~																									
Drain Inlet #43	Sta. 147+35 Rt.																				1																	
Drainline	Sta. 147+35 Rt. – 147+35 Rt.			32.5 ~~36~~																																		

Notes: Stations Refer To Baseline Stations Unless Otherwise Noted.

Pipe sheet thickness (C.A.P./C.S.P. Sht. Thk.) is in inches.

DRAINAGE SUMMARY

PROJECT: HANAMAULU ROAD & APPROACHES

PROJECT NO.: F-051-1(7)

FED. ROAD DIST. NO.	STATE	FED. AID PROJ. NO.	FISCAL YEAR	SHEET NO.	TOTAL SHEETS
HAWAII	HAW.	F051-1(7)	1987	42	164

TYPE OF STRUCTURE	STATION (FROM - TO)	Structure Excavation For Drainage System	Concrete In Drainage System (Class A)	Cement Rubble Masonry	Reinforcing Steel For Drainage System	Bed Course Material For Culverts	30-Inch Reinforced Concrete Pipe, Class III	42-Inch Reinforced Concrete Pipe, Class III	48-Inch Reinforced Concrete Pipe, Class III	54-Inch Reinforced Concrete Pipe, Class III	24-Inch C.S.P. Sht. Thk., 0.109	108-Inch Structural Steel Plate Pipe, No. 8 Gage; 108-Inch Structural Aluminum Plate Pipe, Sht. Thk. ~~0.105~~ 0.125; or 108-Inch C.A.P., Sht. ~~0.105~~ 0.138, (3" x 1")	24-Inch C.S.P. Sht. Thk., 0.168 Or 24-Inch C.A.P. Sht. Thk., 0.075	48-Inch C.S.P. Sht. Thk., 0.168 Or 48-Inch C.A.P. Sht. Thk., ~~0.075~~ 0.105	~~66-Inch C.S.P. Sht. Thk., 0.168 Or 66-Inch C.A.P. Sht. Thk., 0.075~~ 0.164	24-Inch C.S.P. Sht. Thk., 0.079; 24-Inch R.C.P. Cl. III; Or 24-Inch C.A.P. Sht. Thk., 0.075	66-Inch Corrugated Alumn. Pipe Sht. Thk. 0.105
ITEM NO.		206. 2020	503. 0025	508. 0100	602. 1020	603. 0010	603. 1012	603. 1016	603. 1018	603. 1020	603. 2085	603 3127	603. 6001	603. 6161	~~603. 6441~~	603. 7201	~~603. 6443~~
UNIT USED		Cu Yd	Cu Yd	Cu Yd	Lb	Cu Yd	Lin Ft	Lin Ft	Lin Ft	Lin Ft	Lin Ft	Lin Ft	Lin Ft	Lin Ft	~~Lin Ft~~	Lin Ft	~~Lin Ft~~
Drain Inlet #44	Sta. 147+35 Rt.	6.66 ~~11~~	4.21 ~~2.7~~		466 ~~562~~												
Drainline	Sta. 147+35 Rt. - 148+09 Rt.	105.90 ~~308~~													~~74~~		70.6
Inlet Structure	Sta. 148+20 Lt.		52.56 ~~50.0~~		5062 ~~8600~~												
108-Inch Pipe Culvert	Sta. 148+20	2046.64 ~~1840~~				540.47 ~~290~~						323.2 ~~218~~					
Outlet Structure	Sta. 148+20 Rt.		36.02 ~~35.0~~		3114 ~~2429~~												
Drain Inlet #45	Sta. 148+24 Rt.	8.23 ~~14~~	1.00 ~~1.3~~		115 ~~104~~									8.0 ~~18~~			
Drainline	Sta. 148+24 Rt. - 151+00 Rt.	125.51 ~~224~~											200.3 ~~276~~				
Drain Inlet #46	Sta. 151+00 Rt.	10.83 ~~11~~	2.30 ~~2.7~~		564 ~~889~~												
Drainline	Sta. 151+00 Rt. - 151+00 Rt.	10.74 ~~30~~															
Drain Inlet #47	Sta. 151+00 Rt.	6.66 ~~10~~	2.20 ~~2.6~~		391 ~~550~~												
Drainline	Sta. 151+00 Rt. - 153+50 Rt.	107.43 ~~208~~															
Drain Inlet #48	Sta. 153+50 Rt.	11.87 ~~9~~	2.06 ~~1.9~~		468 ~~528~~												
Drainline	Sta. 153+50 Rt. - 156+00 Rt.	213.13 ~~200~~															
Drain Inlet #49	Sta. 156+00 Rt.	9.6 ~~9~~	1.93 ~~1.9~~		468 ~~528~~												
Drainline	Sta. 156+00 Rt. - 158+50 Rt.	100.84 ~~217~~															
Drain Inlet #50	Sta. 158+50 Rt.	9.82 ~~11~~	2.74 ~~2.8~~		892 ~~912~~												
Drainline	Sta. 158+50 Rt. - 158+50 Rt.	21.26 ~~31~~															
Drain Inlet #51	Sta. 158+50 Rt.	7.02 ~~10~~	2.32 ~~2.5~~		415 ~~541~~												
Drainline	Sta. 158+50 Rt. - 161+00 Rt.	173.02 ~~217~~															
Drain Inlet #52	Sta. 161+00 Rt.	7.83 ~~9~~	1.92 ~~1.9~~		380 ~~363~~												
Culvert Extension	Sta. 161+90 Lt.	40.82 ~~55~~									83						
Headwall	Sta. 161+90 Lt.			5.02 ~~2.3~~													
Splitter Box #19	C.H.R. #2 Sta. 0+33 Rt.	75.2 ~~39~~	9.71 ~~8.5~~		677 ~~589~~												
Siphon	C.H.R. #2 Sta. 0+33	125.44 ~~132~~															

DRAINAGE SUMMARY

PROJECT: HANAMAULU ROAD & APPROACHES

PROJECT NO.: F-051-1(7)

Notes: Stations Refer To Baseline Stations Unless Otherwise Noted.

Pipe Sheet Thickness (C.A.P./C.S.P. Sht. Thk.) is in inches.

FED. ROAD DIST. NO.	STATE	FED. AID PROJ. NO.	FISCAL YEAR	SHEET NO.	TOTAL SHEETS
HAWAII	HAW.	F051-1(7)	1987	43	164

TYPE OF STRUCTURE	STATION (FROM-TO)	24-Inch C.S.P. Sht. Thk., 0.109; 24-Inch R.C.P. Cl. III; Or 24-Inch C.A.P. Sht. Thk., 0.075	24-Inch C.S.P. Sht. Thk., 0.138; 24-Inch R.C.P. Cl. III; Or 24-Inch C.A.P. Sht. Thk., 0.075	24-Inch C.S.P. Sht. Thk., 0.168; 24-Inch R.C.P. Cl. III; Or 24-Inch C.A.P. Sht. Thk., 0.075			24-Inch Spiral Rib Metal Pipe, Sht. Thk. 0.109 or 24-Inch R.C.P., Cl. III; or 24-Inch Spiral Rib Alumn. Pipe, Sht. Thk. 0.105	36-Inch C.S.P. Sht. Thk., 0.109; 36-Inch R.C.P. Cl. III; Or 36-Inch C.A.P. Sht. Thk., 0.075				54-Inch C.S.P. Sht. Thk., 0.109; 54-Inch R.C.P. Cl. III; Or ~~0.135~~ 54-Inch C.A.P. Sht. Thk., ~~0.075~~	60-Inch Spiral Rib Metal Pipe, Sht. Thk. 0.109 or 60-Inch R.C.P., Cl. III or 60-Inch Spiral Rib Alumn. Pipe Sht. Thk. 0.105			30-Inch Siphon Pipe	36-Inch Siphon Pipe		Type P Cast Iron Frame And Cover	Type 6124B Steel Frame And Grate	Type Level Steel Frame And Grate	Steel Frame And Grate For Grated Box	Gutter, Type 2 (61218)				Grouted Rubble Paving		18-Inch Slotted Drain Pipe	Concrete Cutoff Ditch, Type I	Concrete Cutoff Ditch, Type II	Concrete Swale	Desilting Basin #1	Desilting Basin #2			Debris Rack		
ITEM NO.		603. 7221	603. 7225	603. 7229			603. 7310	603. 7441				603. 7641	603. 7651			603. 8072	603. 8074		604. 2170	604. 2351	604. 2360	604. 2370	609. 2218				612. 0100		637. 1000	640. 5001	640. 5002	640 7420	646. 1000	646. 2000			647. 1000		
UNIT USED		Lin Ft	Lin Ft	Lin Ft			Lin Ft	Lin Ft				Lin Ft	Lin Ft			Lin Ft	Lin Ft		Each	Each	Each	Each	Lin Ft				Cu Yd		Lin Ft	Lin Ft	Lin Ft	Lin Ft	L.S.	L.S.			L.S.		
Drain Inlet #44	Sta. 147+35 Rt.																				1																		
Drainline	Sta. 147+35 Rt.- 148+09 Rt.																																						
Inlet Structure	Sta. 148+20 Lt.																										14.08 ~~7.6~~											1	
108-Inch Pipe Culvert	Sta. 148+20																																						
Outlet Structure	Sta. 148+20 Rt.																																						
Drain Inlet #45	Sta. 148+24 Rt.																				1																		
Drainline	Sta. 148+24 Rt.- 151+00 Rt.																																						
Drain Inlet #46	Sta. 151+00 Rt.																				1																		
Drainline	Sta. 151+00 Rt.- 151+00 Rt.		32.3 ~~36~~																																				
Drain Inlet #47	Sta. 151+00 Rt.																				1																		
Drainline	Sta. 151+00 Rt.- 153+50 Rt.		240 ~~250~~																																				
Drain Inlet #48	Sta. 153+50 Rt.																				1																		
Drainline	Sta. 153+50 Rt.- 156+00 Rt.		240 ~~250~~																																				
Drain Inlet #49	Sta. 156+00 Rt.																				1																		
Drainline	Sta. 156+00 Rt.- 158+50 Rt.		245.5 ~~250~~																																				
Drain Inlet #50	Sta. 158+50 Rt.																				1																		
Drainline	Sta. 158+50 Rt.- 158+50 Rt.	32.4 ~~36~~																																					
Drain Inlet #51	Sta. 158+50 Rt.																				1																		
Drainline	Sta. 158+50 Rt.- 161+00 Rt.	240 ~~250~~																																					
Drain Inlet #52	Sta. 161+00 Rt.																				1																		
Culvert Extension	Sta. 161+90 Lt.																																						
Headwall	Sta. 161+90 Lt.																																						
Splitter Box #19	C.H.R. #2 Sta. 0+33 Rt.																										5.71 ~~8.0~~												
Siphon	C.H.R. #2 Sta. 0+33																100.0 ~~100~~																						

Notes: Stations Refer To Baseline Stations Unless Otherwise Noted.

Pipe sheet thickness (C.A.P./C.S.P. Sht. Thk.) is in inches.

DRAINAGE SUMMARY

PROJECT: HANAMAULU ROAD & APPROACHES

PROJECT NO.: F-051-1(7)

FED. ROAD DIST. NO.	STATE	FED. AID PROJ. NO.	FISCAL YEAR	SHEET NO.	TOTAL SHEETS
HAWAII	HAW.	F051-1(7)	1987	44	164

TYPE OF STRUCTURE	STATION (FROM-TO)	Structure Excavation For Drainage System	Concrete In Drainage System (Class A)	Cement Rubble Masonry	Reinforcing Steel For Drainage System	Bed Course Material For Culverts	30-Inch Reinforced Concrete Pipe, Class III	42-Inch Reinforced Concrete Pipe, Class III	48-Inch Reinforced Concrete Pipe, Class III	54-Inch Reinforced Concrete Pipe, Class III	24-Inch C.S.P. Sht. Thk., 0.109	108-Inch Structural Steel Plate Pipe, No. 8 Gage ~~or~~; 108-Inch C.A.P. Sht. Thk., ~~0.135~~ 0.125 or 108-Inch C.A.P. Sht. Thk. 0.135 (3"x1")	24-Inch C.S.P. Sht. Thk., 0.168 Or 24-Inch C.A.P. Sht. Thk., 0.075	48-Inch C.S.P. Sht. Thk., 0.168 Or 48-Inch C.A.P. Sht. Thk., ~~0.075~~ 0.105	66-Inch C.S.P. Sht. Thk., 0.168 Or 66-Inch C.A.P. Sht. Thk., ~~0.075~~ 0.164	24-Inch C.S.P. Sht. Thk., 0.079; 24-Inch R.C.P. Cl. III; Or 24-Inch C.A.P. Sht. Thk., 0.075
ITEM NO.		206. 2020	503. 0025	508. 0100	602. 1020	603. 0010	603. 1012	603. 1016	603. 1018	603. 1020	603. 2085	603. 3127	603. 6001	603. 6161	603. 6441	603. 7201
UNIT USED		Cu Yd	Cu Yd	Cu Yd	Lb	Cu Yd	Lin Ft	Lin Ft	Lin Ft	Lin Ft	Lin Ft	Lin Ft	Lin Ft	Lin Ft	Lin Ft	Lin Ft
Splitter Box #17	Rd. "A" Sta. 6+53.61 Lt.	71.30 ~~31~~	8.15 ~~7.2~~		520 ~~488~~											
Siphon	Rd. "A" Sta. 6+71.48	212.70 ~~189~~														
Splitter Box #18	Rd. "A" Sta. 6+86 Rt.	63.56 ~~49~~	8.42 ~~10.5~~		783 ~~745~~											
Splitter Box #20	C.H.R. #2 Sta.1+72 Rt.	34.84 ~~37~~	6.28 ~~8.3~~		612 ~~582~~											
Siphon	C.H.R. #2 Sta. 1+72	50.38 ~~107~~														
Headwall #4	C.H.R. #2 Sta. 1+72 Lt.	8.02 ~~45~~		2.97 ~~4.0~~												
Concrete Swale	Sta. 57+55.15 Rt.															
Concrete Swale	Rd. "A" Sta. 2+50 Rt.															
Concrete Swale	Rd. "A" Sta. 3+50 Lt.															
Concrete Swale	Rd. "A" Sta. 7+50 Lt.															
Concrete Cutoff Ditch, Typ I	Sta. 74+58 Lt. - D.B. #1															
Concrete Cutoff Ditch, Type I	Sta. 121+00 Lt. - D.B. #2															
Concrete Cutoff Ditch, Type I	Sta. 121+00 Lt. - Junction Box															
Concrete Cutoff Ditch, Type II	Sta. 137+00 Lt. - 141+90 Lt.															
Concrete Cutoff Ditch, Type II	Junction Box - Rd. "A" Sta. 5+00 Lt.															
Gutter, Type 2 (61218)	Sta. 90+35 Rt. - 100+15 Rt.															
Gutter, Type 2 (61218)	Sta. 112+47 Rt. - 121+00 Rt.															
Gutter, Type 2 (61218)	Sta. 129+00 Lt. - Rd. "A" Sta. 1+05.50 Lt.															
Gutter, Type 2 (61218)	Rd. "A" Sta. 1+06.03 Rt. - Sta. 146+00 Lt.															

DRAINAGE SUMMARY

PROJECT: HANAMAULU ROAD & APPROACHES

PROJECT NO.: F-051-1(7)

Notes: Stations Refer To Baseline Stations Unless Otherwise Noted.

Pipe Sheet Thickness (C.A.P./C.S.P. Sht. Thk.) is in inches.

FED. ROAD DIST. NO.	STATE	FED. AID PROJ. NO.	FISCAL YEAR	SHEET NO.	TOTAL SHEETS
HAWAII	HAW.	F051-1(7)	1987	45	164

TYPE OF STRUCTURE	STATION (FROM-TO)	24-Inch C.S.P. Sht. Thk., 0.109; 24-Inch R.C.P. Cl. III; Or 24-Inch C.A.P. Sht. Thk., 0.075	24-Inch C.S.P. Sht. Thk., 0.138; 24-Inch R.C.P. Cl. III; Or 24-Inch C.A.P. Sht. Thk., 0.075	24-Inch C.S.P. Sht. Thk., 0.168; 24-Inch R.C.P. Cl. III; Or 24-Inch C.A.P. Sht. Thk., 0.075			24-Inch Spiral Rib Metal Pipe, Sht. Thk. 0.109 ~~or~~ 24-Inch Spiral Rib Alumn. Pipe 24-Inch R.C.P., Cl. III; ~~Sht. Thk. 0.105~~	36-Inch C.S.P. Sht. Thk., 0.109; 36-Inch R.C.P. Cl. III; Or 36-Inch C.A.P. Sht. Thk., 0.075				54-Inch C.S.P. Sht. Thk., 0.109; 54-Inch R.C.P. Cl. III; Or 0.135 ~~54-Inch C.A.P. Sht. Thk., 0.075~~	60-Inch Spiral Rib Metal Pipe; Sht. Thk. 0.109 or 60-Inch R.C.P., Cl. III or ~~60-Inch Spiral Rib Alumn. Pipe Sht. Thk. 0.105~~		30-Inch Siphon Pipe	36-Inch Siphon Pipe		Type P Cast Iron Frame And Cover	Type 6121 4B Steel Frame And Grate	Type Level Steel Frame And Grate	Steel Frame And Grate For Grated Box	Gutter, Type 2 (61218)				Grouted Rubble Paving		18-Inch Slotted Drain Pipe	Concrete Cutoff Ditch, Type I	Concrete Cutoff Ditch, Type II	Concrete Swale	Desilting Basin #1	Desilting Basin #2			Debris Rack		
ITEM NO.		603. 7221	603. 7225	603. 7229			603. 7310	603. 7441				603. 7641	603. 7651			603. 8072	603. 8074		604. 2170	604. 2351	604. 2360	604. 2370	609. 2218				612. 0100		637. 1000	640 5001	640 5002	640 7420	646. 1000	646. 2000			647. 1000		
UNIT USED		Lin Ft	Lin Ft	Lin Ft			Lin Ft	Lin Ft				Lin Ft	Lin Ft			Lin Ft	Lin Ft		Each	Each	Each	Each	Lin Ft				Cu Yd		Lin Ft	Lin Ft.	Lin Ft.	Lin Ft.	L.S.	L.S.			L.S.		
Splitter Box #17	Rd. "A" Sta. 6+53.61 Lt.																										2.02 ~~4.0~~												
Siphon	Rd. "A" Sta. 6+71.48																145.4 ~~144~~																						
Splitter Box #18	Rd. "A" Sta. 6+86 Rt.																										4.24 ~~8.0~~												
Splitter Box #20	C.H.R. #2 Sta. 1+72 Rt.																										4.50 ~~8.0~~												
Siphon	C.H.R. #2 Sta. 1+72															78.4 ~~80~~																							
Headwall #4	C.H.R. #2 Sta. 1+72 Lt.																										2.04 ~~7.0~~												
Concrete Swale	Sta. 57+55.15 Rt.																															41 ~~30~~							
Concrete Swale	Rd. "A" Sta. 2+50 Rt.																															0 ~~50~~							
Concrete Swale	Rd. "A" Sta. 3+50 Lt.																															37 ~~50~~							
Concrete Swale	Rd. "A" Sta. 7+50 Lt.																															0 ~~40~~							
Concrete Cutoff Ditch, Type I	Sta. 74+58 Lt.- D.B. #1																													1050 ~~1989~~									
Concrete Cutoff Ditch, Type I	Sta. 121+00 Lt.- D.B.#2																													310 ~~640~~	300								
Concrete Cutoff Ditch, Type I	Sta. 121+00 Lt.- JUNCTION BOX.																													~~1306~~ 1155	250								
Concrete Cutoff Ditch, Type II	Sta. 137+00 Lt.- 141+90 Lt.																														~~465~~ 490								
Concrete Cutoff Ditch, Type II	JUNCTION BOX- Rd."A" Sta. 5+00 Lt.																														~~450~~ 425								
Gutter, Type 2 (61218)	Sta. 90+35 Rt. - 100+15 Rt.																						~~990~~ 980																
Gutter, Type 2 (61218)	Sta. 112+47 Rt. - 121+00 Rt.																						~~868~~ 863																
Gutter, Type 2 (61218)	Sta. 129+00 Lt. - Rd. "A" Sta. 1+05.50 Lt.																						704 ~~715~~																
Gutter, Type 2 (61218)	Rd."A" Sta. 1+06.03 Rt. - Sta. 46+00 Lt.																						1042 ~~1055~~																

FED. ROAD DIST. NO.	STATE	FED. AID PROJ. NO.	FISCAL YEAR	SHEET NO.	TOTAL SHEETS
HAWAII	HAW.	F-051-1(7)	1987	46	164

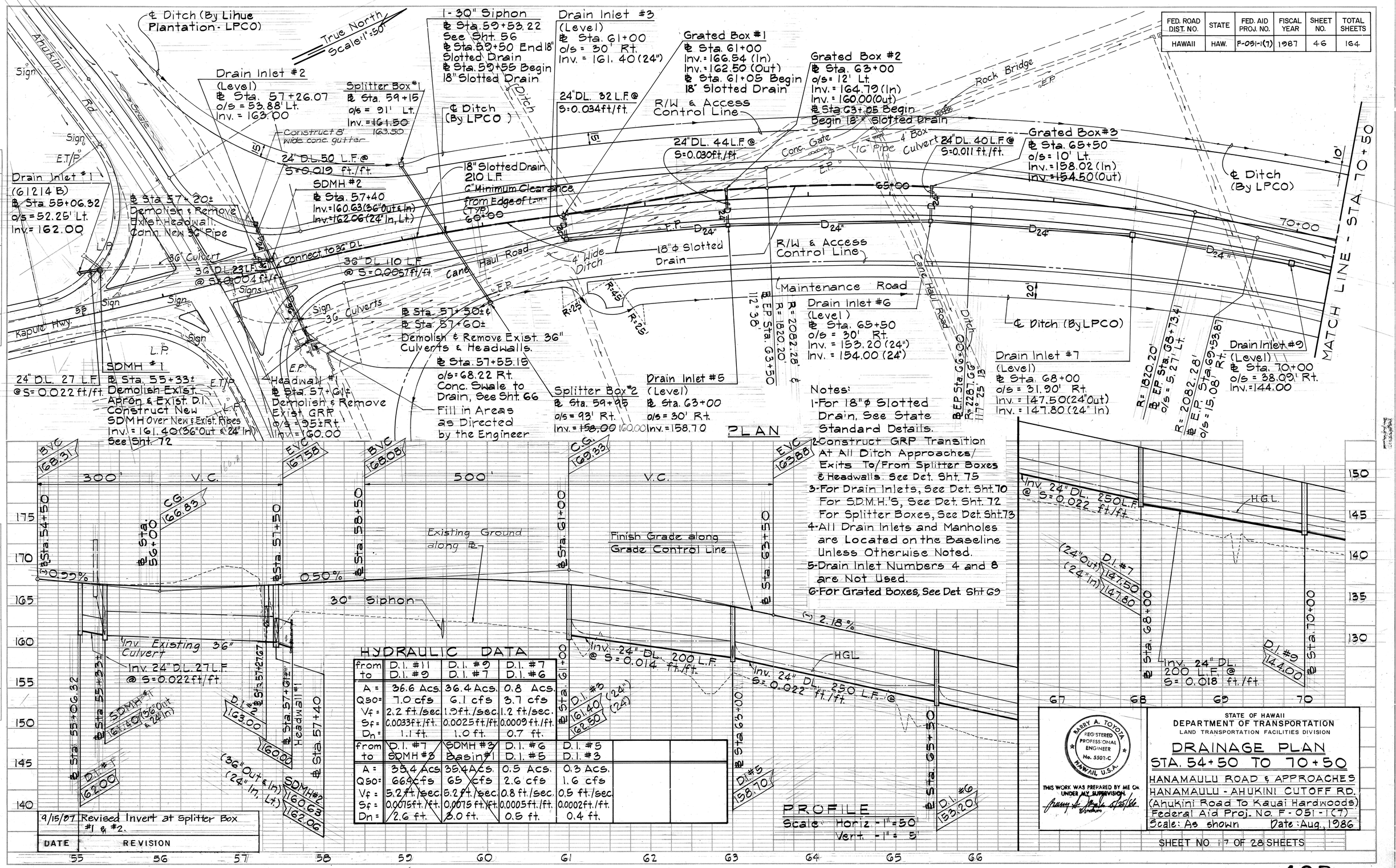

HYDRAULIC DATA

from / to	D.I. #11 / D.I. #9	D.I. #9 / D.I. #7	D.I. #7 / D.I. #6			
A =	36.6 Acs.	36.4 Acs.	0.8 Acs.			
Q50 =	7.0 cfs	6.1 cfs	3.7 cfs			
Vf =	2.2 ft./sec.	1.3 ft./sec.	1.2 ft./sec.			
Sf =	0.0033 ft./ft.	0.0025 ft./ft.	0.0009 ft./ft.			
Dn =	1.1 ft.	1.0 ft.	0.7 ft.			
from / to	D.I. #7 / SDMH #3	SDMH #3 / Basin #1	D.I. #6 / D.I. #5	D.I. #5 / D.I. #3		
A =	35.4 Acs.	35.4 Acs.	0.5 Acs.	0.3 Acs.		
Q50 =	66.4 cfs	65 cfs	2.6 cfs	1.6 cfs		
Vf =	5.2 ft./sec.	5.2 ft./sec.	0.8 ft./sec.	0.5 ft./sec.		
Sf =	0.0075 ft./ft.	0.0075 ft./ft.	0.0005 ft./ft.	0.0002 ft./ft.		
Dn =	2.6 ft.	3.0 ft.	0.5 ft.	0.4 ft.		

DATE	REVISION
9/15/07	Revised Invert at Splitter Box #1 & #2.

BARRY A. TOYOZA
REGISTERED PROFESSIONAL ENGINEER
No. 5502-C
HAWAII, U.S.A.

THIS WORK WAS PREPARED BY ME OR UNDER MY SUPERVISION

Signature

STATE OF HAWAII
DEPARTMENT OF TRANSPORTATION
LAND TRANSPORTATION FACILITIES DIVISION

DRAINAGE PLAN
STA. 54+50 TO 70+50

HANAMAULU ROAD & APPROACHES
HANAMAULU - AHUKINI CUTOFF RD.
(Ahukini Road To Kauai Hardwoods)
Federal Aid Proj. No. F-051-1(7)
Scale: As shown Date: Aug., 1986

SHEET NO. 17 OF 28 SHEETS

PLAN: SURVEYED, PLOTTED, ALIGNMENT CHECKED, RT. OF WAY CHECKED, NOTE BOOK NO.
PROFILE: SURVEYED, PLOTTED, GRADES CHECKED, BLUE TOP, STRUCTURE NOTAT'NS CHK'D, NOTE BOOK NO.
BY | DATE

PLATE 1—PLAN PROFILE B. P. R. STANDARD
TELEDYNE POST, CHICAGO

46R

68

FED. ROAD DIST. NO.	STATE	FED. AID PROJ. NO.	FISCAL YEAR	SHEET NO.	TOTAL SHEETS
HAWAII	HAW.	F-051-1(7)	1987	47	164

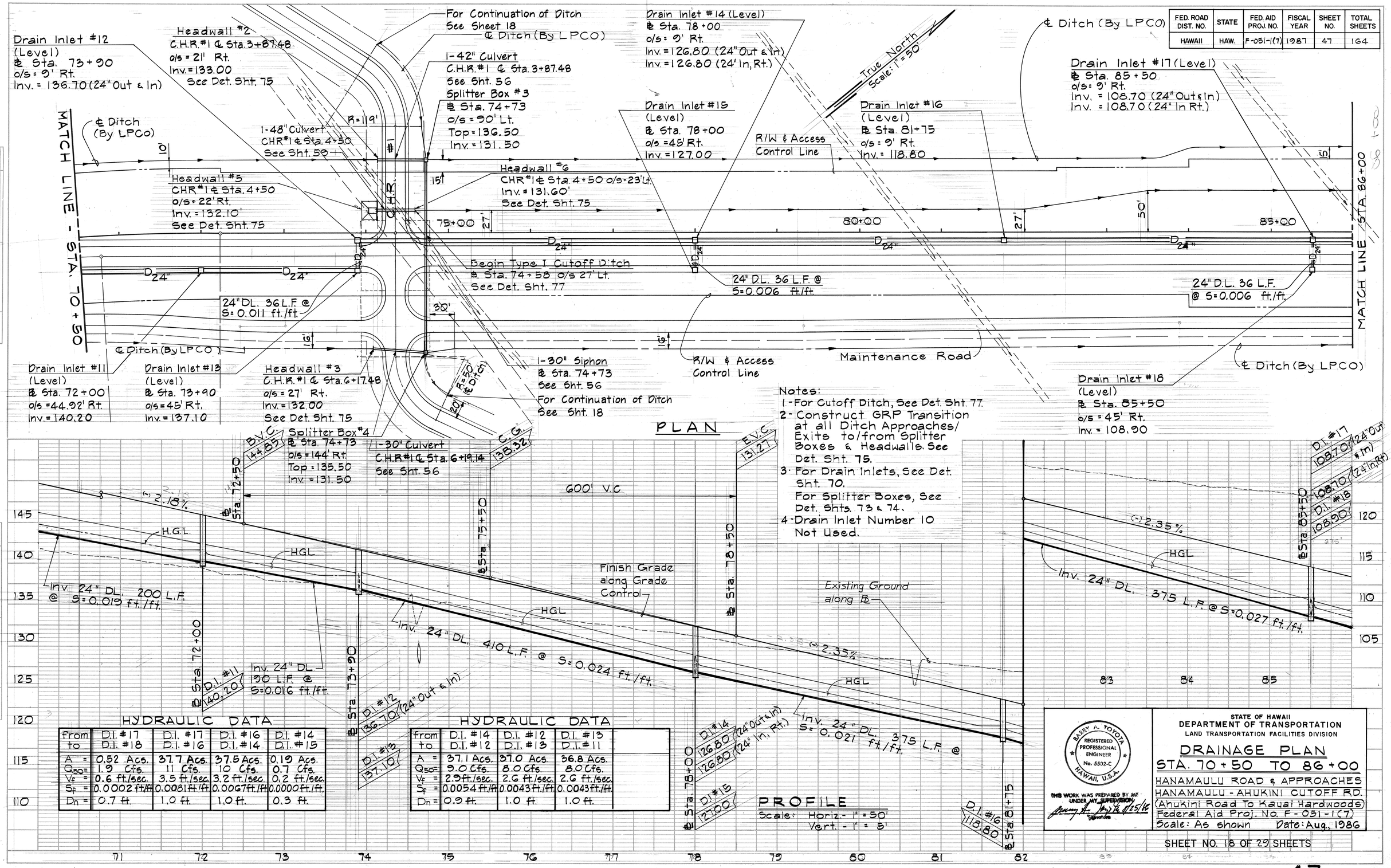

from to	D.I. #17 D.I. #18	D.I. #17 D.I. #16	D.I. #16 D.I. #14	D.I. #14 D.I. #15
A =	0.52 Acs.	37.7 Acs.	37.5 Acs.	0.19 Acs.
Q_{50} =	1.9 Cfs.	11 Cfs.	10 Cfs.	0.7 Cfs.
V_f =	0.6 ft./sec.	3.5 ft./sec.	3.2 ft./sec.	0.2 ft./sec.
S_f =	0.0002 ft./ft.	0.0081 ft./ft.	0.0067 ft./ft.	0.0000 ft./ft.
Dn =	0.7 ft.	1.0 ft.	1.0 ft.	0.3 ft.

from to	D.I. #14 D.I. #12	D.I. #12 D.I. #13	D.I. #13 D.I. #11	
A =	37.1 Acs.	37.0 Acs.	36.8 Acs.	
Q_{50} =	9.0 Cfs.	8.0 Cfs.	8.0 Cfs.	
V_f =	2.9 ft./sec.	2.6 ft./sec.	2.6 ft./sec.	
S_f =	0.0054 ft./ft.	0.0043 ft./ft.	0.0043 ft./ft.	
Dn =	0.9 ft.	1.0 ft.	1.0 ft.	

PLAN

NOTE BOOK NO. — SURVEYED, PLOTTED, ALIGNMENT CHECKED, RT. OF WAY CHECKED — BY — DATE

PROFILE

NOTE BOOK NO. — SURVEYED, PLOTTED, GRADES CHECKED, BRIDGE CHECKED, STRUCTURE NOTATNS CHKD. — BY — DATE

PLATE 1—PLAN PROFILE B. P. R. STANDARD TELEDYNE POST, CHICAGO

FED. ROAD DIST. NO.	STATE	FED. AID PROJ. NO.	FISCAL YEAR	SHEET NO.	TOTAL SHEETS
HAWAII	HAW.	F-051-1(7)	1987	48	164

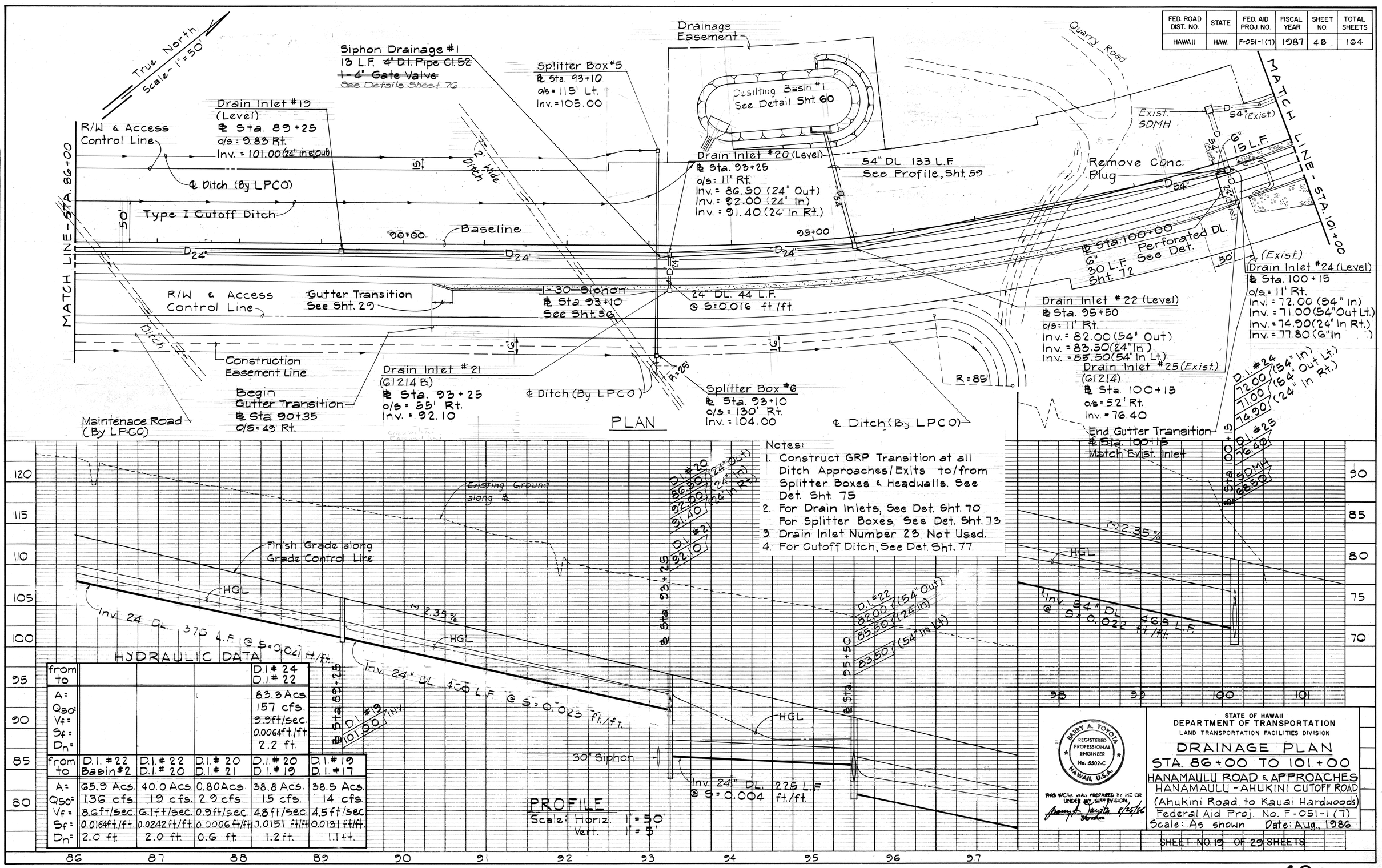

HYDRAULIC DATA

from to				D.I. # 24 D.I. # 22	
A:				83.3 Acs.	
Q50:				157 cfs.	
Vf:				9.9 ft/sec.	
Sf:				0.0064 ft./ft.	
Dn:				2.2 ft.	
from to	D.I. # 22 Basin #2	D.I. # 22 D.I. # 20	D.I. # 20 D.I. # 21	D.I. # 20 D.I. # 19	D.I. # 19 D.I. # 17
A:	65.9 Acs.	40.0 Acs.	0.80 Acs.	38.8 Acs.	38.5 Acs.
Q50:	136 cfs	19 cfs.	2.9 cfs.	15 cfs.	14 cfs.
Vf:	8.6 ft/sec.	6.1 ft/sec.	0.9 ft/sec.	4.8 ft/sec.	4.5 ft/sec.
Sf:	0.0164 ft./ft.	0.0242 ft/ft.	0.0006 ft/ft.	0.0151 ft/ft.	0.0131 ft/ft.
Dn:	2.0 ft.	2.0 ft.	0.6 ft.	1.2 ft.	1.1 ft.

PLAN: NOTE BOOK | SURVEYED | PLOTTED | ALIGNMENT CHECKED | RT. OF WAY CHECKED | DATE | BY

PROFILE: NOTE BOOK | NO. | SURVEYED | PLOTTED | GRADES CHECKED | B.M. & ELEVATIONS | STRUCTURE NOTAT'NS CK'KD.

BARRY A. TOYOTA
REGISTERED PROFESSIONAL ENGINEER
No. 5502-C
HAWAII, U.S.A.

THIS WORK WAS PREPARED BY ME OR UNDER MY SUPERVISION.
Barry A. Toyota 8/25/86
Signature

STATE OF HAWAII
DEPARTMENT OF TRANSPORTATION
LAND TRANSPORTATION FACILITIES DIVISION

DRAINAGE PLAN

STA. 86+00 TO 101+00

HANAMAULU ROAD & APPROACHES

HANAMAULU - AHUKINI CUTOFF ROAD

(Ahukini Road to Kauai Hardwoods)

Federal Aid Proj. No. F-051-1(7)

Scale: As shown Date: Aug., 1986

SHEET NO. 19 OF 29 SHEETS

FED. ROAD DIST. NO.	STATE	FED. AID PROJ. NO.	FISCAL YEAR	SHEET NO.	TOTAL SHEETS
HAWAII	HAW.	F-051-1(7)	1987	49	164

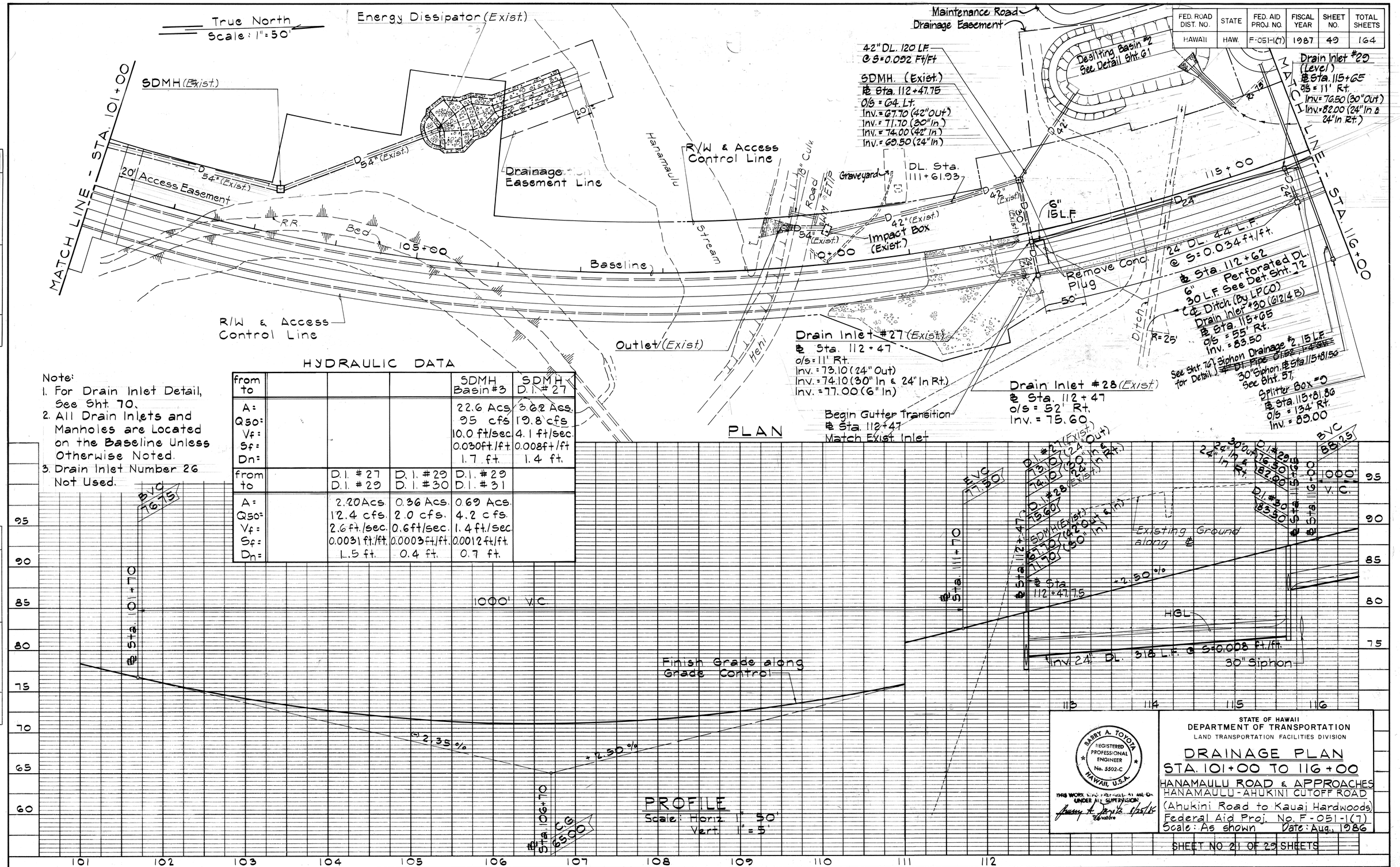

from to				SDMH Basin #3	SDMH D.I. # 27
A:				22.6 Acs.	3.62 Acs.
Q50:				95 cfs	19.8 cfs
Vf:				10.0 ft/sec.	4.1 ft/sec.
Sf:				0.030 ft./ft.	0.008 ft./ft.
Dn:				1.7 ft.	1.4 ft.
from to		D.I. # 27 D.I. # 29	D.I. # 29 D.I. # 30	D.I. # 29 D.I. # 31	
A:		2.20 Acs.	0.36 Acs.	0.69 Acs.	
Q50:		12.4 cfs.	2.0 cfs.	4.2 cfs.	
Vf:		2.6 ft./sec.	0.6 ft/sec.	1.4 ft./sec.	
Sf:		0.0031 ft./ft.	0.0003 ft./ft.	0.0012 ft./ft.	
Dn:		1.5 ft.	0.4 ft.	0.7 ft.	

PLAN	SURVEYED	BY	DATE
NOTE BOOK NO.	PLOTTED		
	ALIGNMENT CHECKED		
	RT. OF WAY CHECKED		

PROFILE	SURVEYED	BY	DATE
NOTE BOOK NO.	PLOTTED		
	GRADES CHECKED		
	B. M. S NOTED		
	STRUCTURE NOTATNS CHK'D.		

STATE OF HAWAII
DEPARTMENT OF TRANSPORTATION
LAND TRANSPORTATION FACILITIES DIVISION

DRAINAGE PLAN
STA. 101+00 TO 116+00

HANAMAULU ROAD & APPROACHES
HANAMAULU - AHUKINI CUTOFF ROAD
(Ahukini Road to Kauai Hardwoods)
Federal Aid Proj. No. F-051-1(7)
Scale: As shown Date: Aug., 1986

BARRY A. TOYOTA
REGISTERED PROFESSIONAL ENGINEER
No. 5502-C
HAWAII, U.S.A.

THIS WORK WAS PREPARED BY ME OR UNDER MY SUPERVISION
Barry A. Toyota 1/25/86
Signature

SHEET NO 21 OF 29 SHEETS

PLATE 1—PLAN PROFILE B. P. R. STANDARD
TELEDYNE POST, CHICAGO

2329-06

FED. ROAD DIST. NO.	STATE	FED. AID PROJ. NO.	FISCAL YEAR	SHEET NO.	TOTAL SHEETS
HAWAII	HAW.	F-051-1(7)	1987	50	164

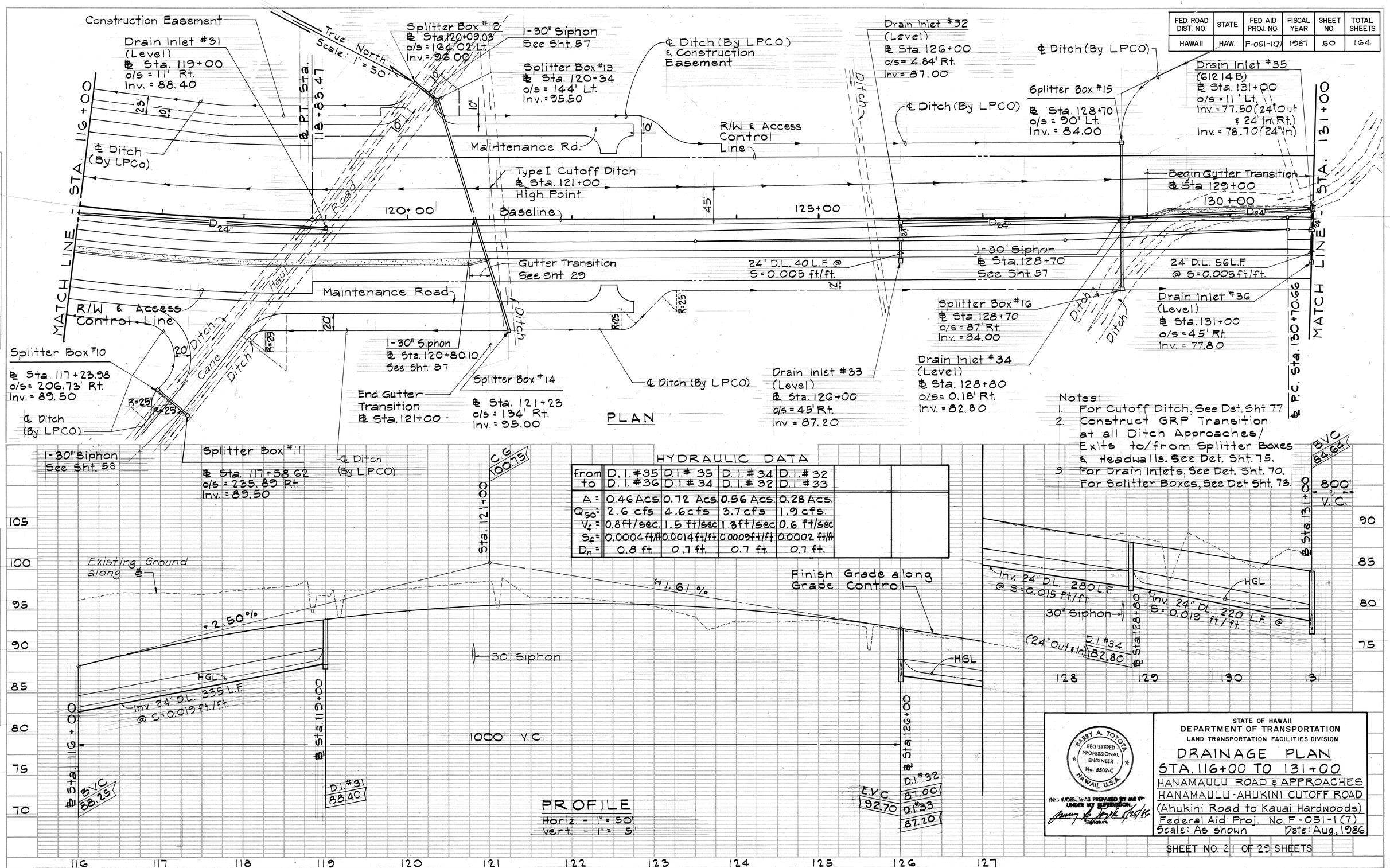

STATE OF HAWAII
DEPARTMENT OF TRANSPORTATION
LAND TRANSPORTATION FACILITIES DIVISION

BARRY A. TOYOTA
REGISTERED PROFESSIONAL ENGINEER
No. 5502-C
HAWAII, U.S.A.

THIS WORK WAS PREPARED BY ME OR UNDER MY SUPERVISION.
Signature

DRAINAGE PLAN

STA. 116+00 TO 131+00

HANAMAULU ROAD & APPROACHES
HANAMAULU-AHUKINI CUTOFF ROAD
(Ahukini Road to Kauai Hardwoods)
Federal Aid Proj. No. F-051-1(7)
Scale: As shown Date: Aug., 1986

SHEET NO. 21 OF 29 SHEETS

PLAN: SURVEYED / PLOTTED / ALIGNMENT CHECKED / RT. OF WAY CHECKED / NOTE BOOK NO. / DATE / BY

PROFILE: SURVEYED / PLOTTED / GRADES CHECKED / B.M. NOTED / STRUCTURE NOTAT'NS CH'KD. / NOTE BOOK NO. / DATE / BY

PLATE 1—PLAN PROFILE A. P. R. STANDARD
TELEDYNE POST, CHICAGO

FED. ROAD DIST. NO.	STATE	FED. AID PROJ. NO.	FISCAL YEAR	SHEET NO.	TOTAL SHEETS
HAWAII	HAW.	F-051-1(7)	1987	51	164

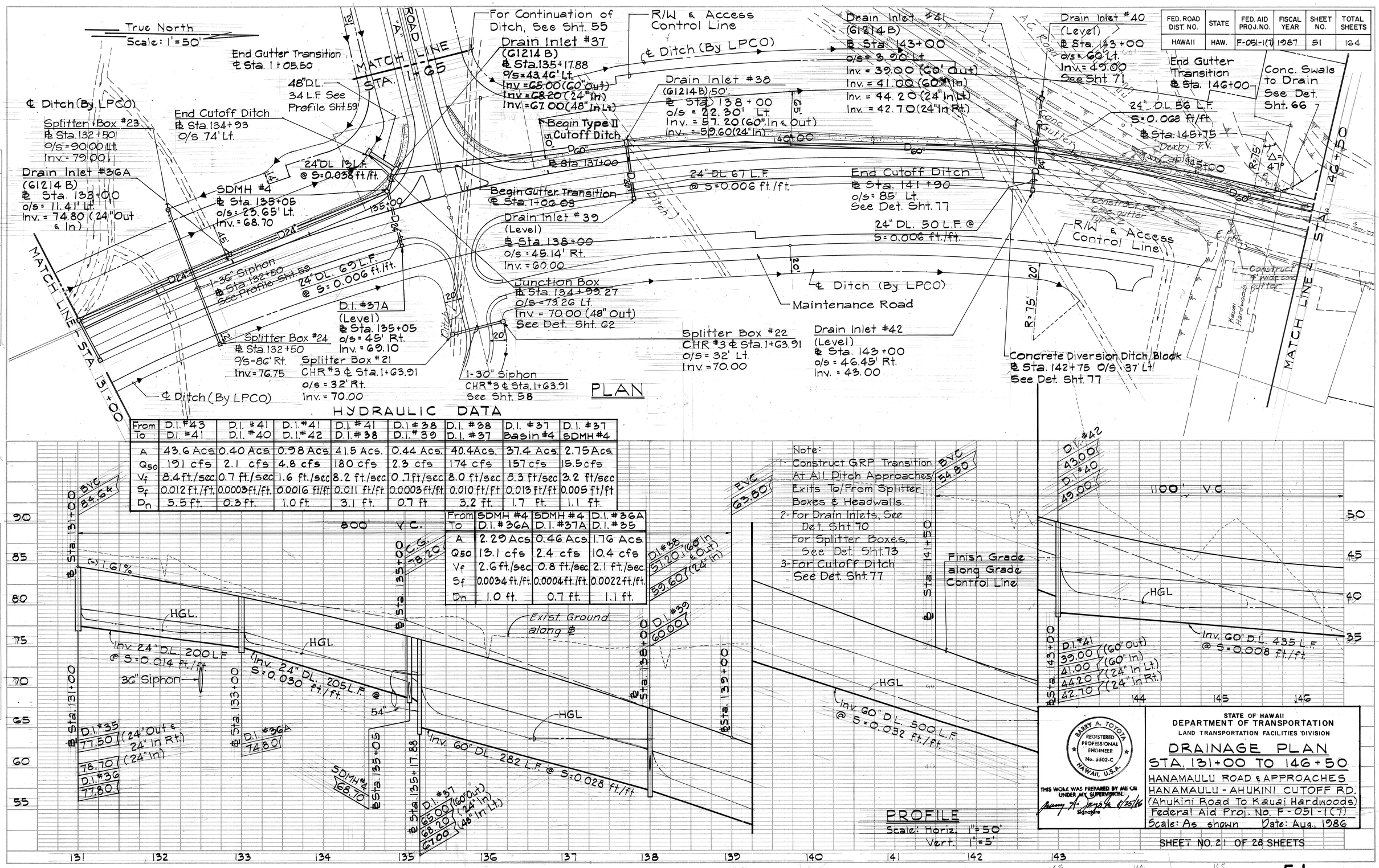

From	D.I. #43	D.I. #41	D.I. #41	D.I. #41	D.I. #38	D.I. #38	D.I. #37	D.I. #37
To	D.I. #41	D.I. #40	D.I. #42	D.I. #38	D.I. #39	D.I. #37	Basin #4	SDMH #4
A	43.6 Acs.	0.40 Acs.	0.98 Acs.	41.5 Acs.	0.44 Acs.	40.4 Acs.	37.4 Acs.	2.75 Acs.
Q_{50}	191 cfs	2.1 cfs	4.8 cfs	180 cfs	2.3 cfs	174 cfs	157 cfs	15.5 cfs
V_f	8.4 ft./sec.	0.7 ft./sec	1.6 ft./sec	8.2 ft./sec.	0.7 ft/sec	8.0 ft/sec	8.3 ft/sec	3.2 ft/sec
S_f	0.012 ft./ft.	0.0003 ft./ft.	0.0016 ft/ft.	0.011 ft/ft.	0.0003 ft/ft.	0.010 ft/ft	0.013 ft/ft	0.005 ft/ft
Dn	5.5 ft.	0.3 ft.	1.0 ft.	3.1 ft.	0.7 ft.	3.2 ft.	1.7 ft.	1.1 ft.

From	SDMH #4	SDMH #4	D.I. #36A
To	D.I. #36A	D.I. #37A	D.I. #35
A	2.29 Acs.	0.46 Acs.	1.76 Acs.
Q_{50}	13.1 cfs	2.4 cfs	10.4 cfs
V_f	2.6 ft./sec.	0.8 ft./sec.	2.1 ft./sec.
S_f	0.0034 ft./ft.	0.0004 ft./ft.	0.0022 ft./ft.
Dn	1.0 ft.	0.7 ft.	1.1 ft.

STATE OF HAWAII
DEPARTMENT OF TRANSPORTATION
LAND TRANSPORTATION FACILITIES DIVISION

DRAINAGE PLAN
STA. 131+00 TO 146+50

HANAMAULU ROAD & APPROACHES
HANAMAULU - AHUKINI CUTOFF RD.
(Ahukini Road To Kauai Hardwoods)
Federal Aid Proj. No. F-051-1(7)
Scale: As shown Date: Aug., 1986

BARRY A. TOYOTA
REGISTERED PROFESSIONAL ENGINEER
No. 3502-C
HAWAII, U.S.A.

THIS WORK WAS PREPARED BY ME OR UNDER MY SUPERVISION.
Signature 8/25/86

SHEET NO. 21 OF 28 SHEETS

PLAN: SURVEYED, PLOTTED, ALIGNMENT CHECKED, RT. OF WAY CHECKED, NOTE BOOK NO., BY, DATE

PROFILE: SURVEYED, PLOTTED, GRADES CHECKED, R.O.W. CHECKED, STRUCTURE NOTATIONS CHKD., NOTE BOOK NO., BY, DATE

PLATE 3—PLAN PROFILE B. P. R. STANDARD
TELEDYNE POST, CHICAGO

FED. ROAD DIST. NO.	STATE	FED. AID PROJ. NO.	FISCAL YEAR	SHEET NO.	TOTAL SHEETS
HAWAII	HAW.	F-051-1(7)	1987	52	164

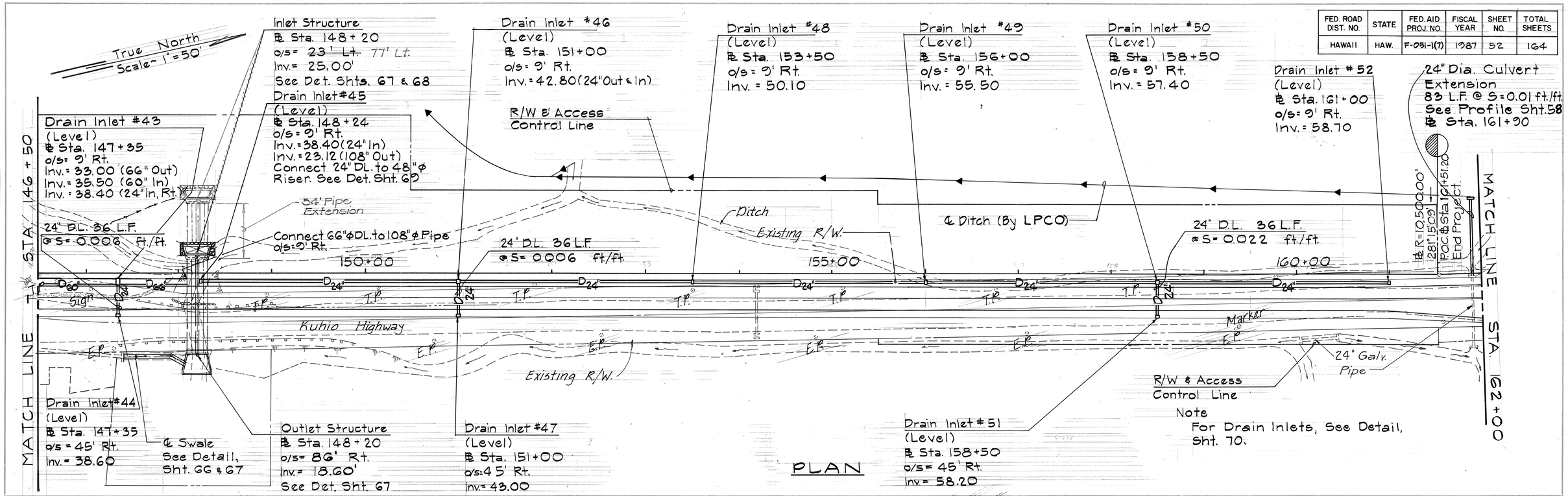

HYDRAULIC DATA

from / to	Outlet / D.I. #43	D.I. #43 / D.I. #44	D.I. #45 / D.I. #46	D.I. #46 / D.I. #47	D.I. #46 / D.I. #48	D.I. #48 / D.I. #49	D.I. #49 / D.I. #50	D.I. #50 / D.I. #51	D.I. #50 / D.I. #52
A=	45.0 Acs	1.01 Acs	1.44 Acs.	0.52 Acs.	0.81 Acs.	0.670 Acs	0.50 Acs	0.25 Acs.	0.14 Acs
Q50=	198 cfs	4.9 cfs	8.1 cfs	2.5 cfs	5.1 cfs	4.4 cfs	3.5 cfs	1.6 cfs	1.2 cfs
Vf=	8.7 ft/sec	1.6 ft/sec	2.7 ft/sec	0.8 ft/sec.	1.7 ft/sec	1.5 ft/sec	1.2 ft/sec	0.5 ft/sec.	0.4 ft/sec.
Sf=	0.013 ft/ft.	0.0016 ft./ft.	0.0045 ft./ft.	0.0004 ft/ft	0.0017 ft./ft.	0.0013 ft/ft.	.0008 ft/ft.	0.0002 ft/ft	0.0001 ft./ft.
Dn=	2.1 ft.	1.0 ft.	1.0 ft.	0.7 ft.	0.7 ft.	0.7 ft.	0.8 ft.	0.4 ft.	0.5 ft.

BARRY A. TOYOTA
REGISTERED PROFESSIONAL ENGINEER
No. 5502-C
HAWAII, U.S.A.

THIS WORK WAS PREPARED BY ME UNDER MY SUPERVISION.
Barry A. Toyota 8/25/86
Signature

STATE OF HAWAII
DEPARTMENT OF TRANSPORTATION
LAND TRANSPORTATION FACILITIES DIVISION

DRAINAGE PLAN
STA. 146+50 TO 162+00

HANAMAULU ROAD & APPROACHES
HANAMAULU - AHUKINI CUTOFF RD.
(Ahukini Road To Kauai Hardwoods)
Federal Aid Proj. No. F-051-1(7)
Scale: As shown Date: Aug., 1986

SHEET NO. 23 OF 29 SHEETS

PLAN: NOTE BOOK NO. ___ SURVEYED ___ PLOTTED ___ ALIGNMENT CHECKED ___ RT. OF WAY CHECKED ___ BY ___ DATE ___

PROFILE: NOTE BOOK NO. ___ SURVEYED ___ PLOTTED ___ GRADES CHECKED ___ BY ___ STRUCTURE NOTATNS CK'KD. ___ BY ___ DATE ___

FED. ROAD DIST. NO.	STATE	FED. AID PROJ. NO.	FISCAL YEAR	SHEET NO.	TOTAL SHEETS
HAWAII	HAW.	F-051-1(7)	1987	53	164

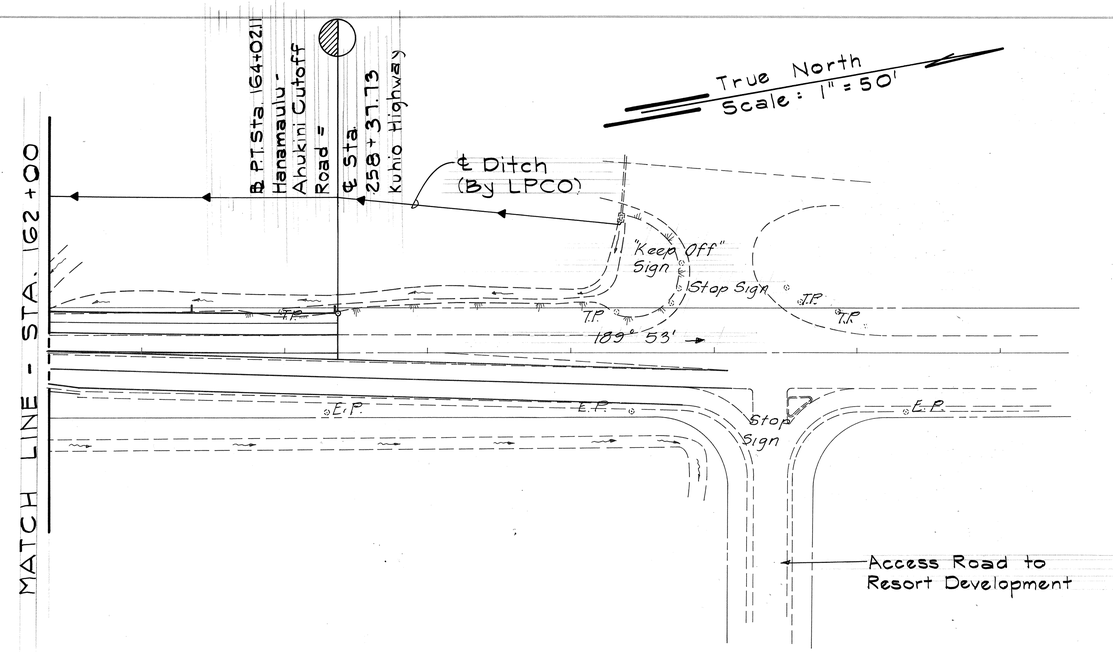

PLAN

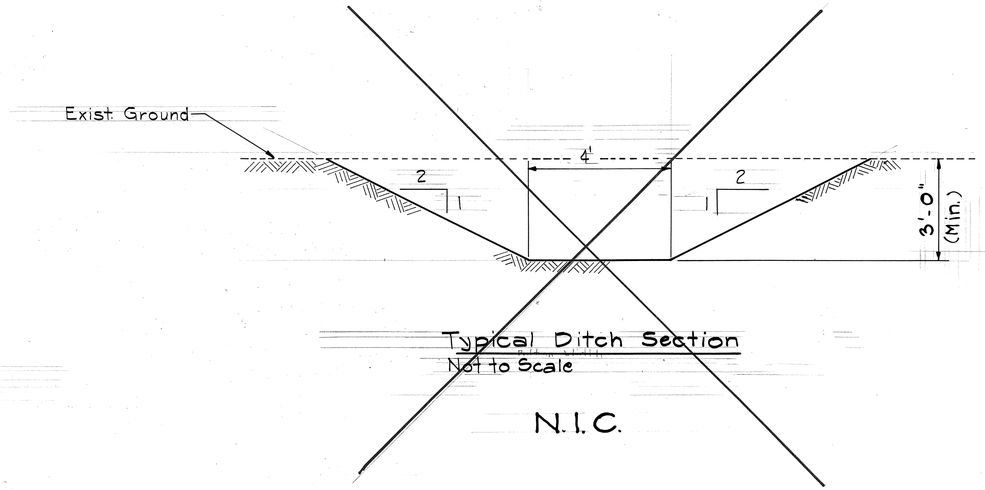

Typical Ditch Section
Not to Scale

N.I.C.

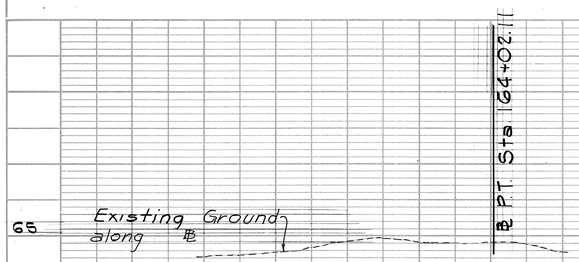

PROFILE
Scale: Horiz. 1" = 50'
Vert. 1" = 5'

162 163 164

PLAN		BY	DATE
NOTE BOOK NO.	SURVEYED PLOTTED ALIGNMENT CHECKED RT. OF WAY CHECKED		

PROFILE		BY	DATE
NOTE BOOK NO.	SURVEYED PLOTTED GRADES CHECKED B.M.'S NOTED STRUCTURE NOTATNS CHKD.		

BARRY A. TOYOTA
REGISTERED PROFESSIONAL ENGINEER
No. 5502-C
HAWAII, U.S.A.

THIS WORK WAS PREPARED BY ME OR UNDER MY SUPERVISION.
Barry A. Toyota 8/25/86
Signature

STATE OF HAWAII
DEPARTMENT OF TRANSPORTATION
LAND TRANSPORTATION FACILITIES DIVISION

DRAINAGE PLAN
STA. 162+00 TO 164+02.11
HANAMAULU ROAD & APPROACHES
HANAMAULU - AHUKINI CUTOFF ROAD
(Ahukini Road to Kauai Hardwoods)
Federal Aid Proj. No. F-051-1(7)
Scale: As shown Date: Aug., 1986

SHEET NO. 24 OF 29 SHEETS

FED. ROAD DIST. NO.	STATE	FED. AID PROJ. NO.	FISCAL YEAR	SHEET NO.	TOTAL SHEETS
HAWAII	HAW.	F-051-1(7)	1987	54	164

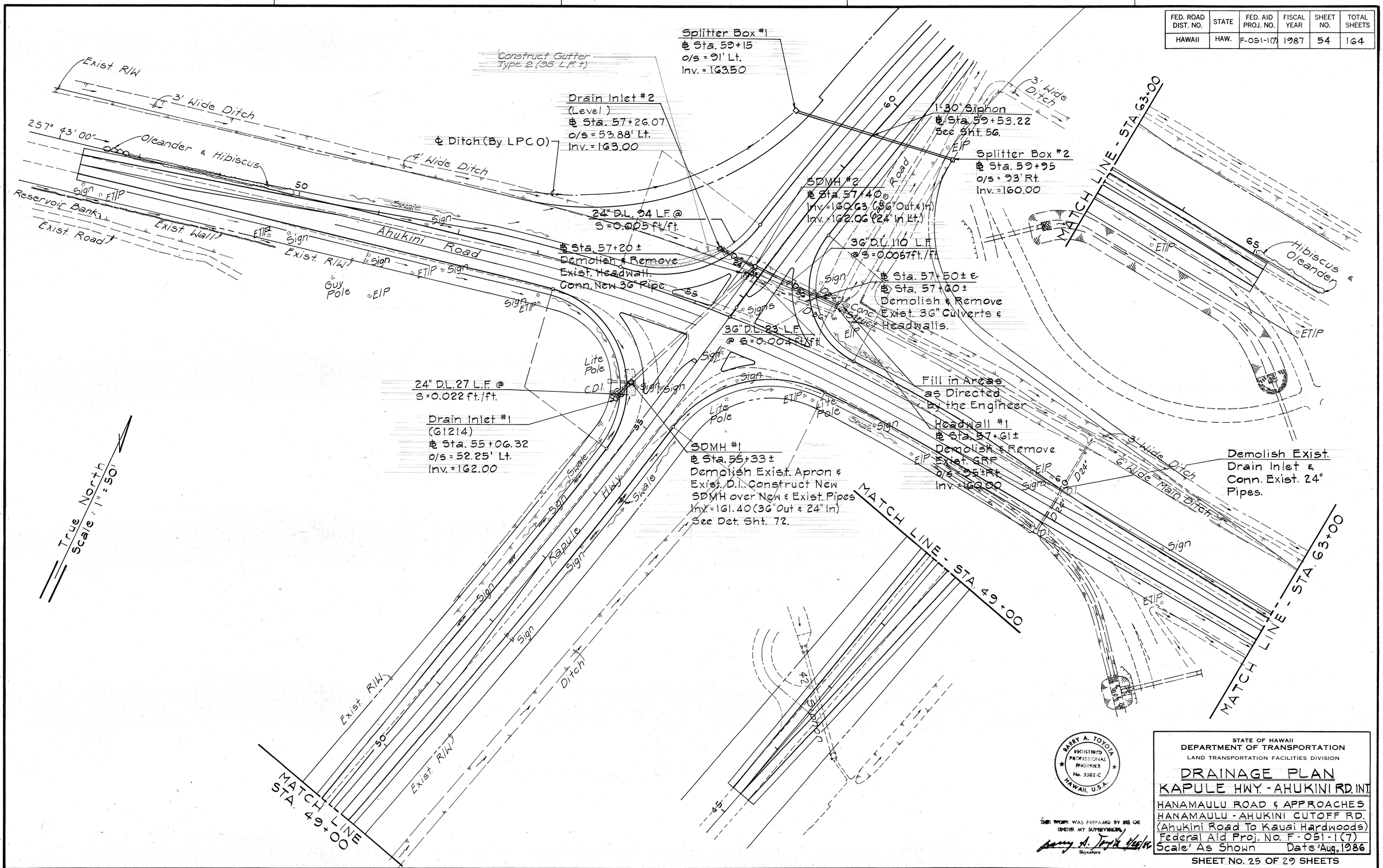

ORIGINAL PLAN	
	SURVEY PLOTTED BY
	TRACING BY
	TRACED BY
NOTE BOOK	DESIGNED BY
	QUANTITIES BY
No.	CHECKED BY

DATE
" "
" "
" "

BARRY A. TOYOTA
REGISTERED PROFESSIONAL ENGINEER
No. 5502-C
HAWAII, U.S.A.

THIS WORK WAS PREPARED BY ME OR UNDER MY SUPERVISION

Barry A. Toyota 6/26/86
Signature

STATE OF HAWAII
DEPARTMENT OF TRANSPORTATION
LAND TRANSPORTATION FACILITIES DIVISION

DRAINAGE PLAN

KAPULE HWY. - AHUKINI RD. INT.

HANAMAULU ROAD & APPROACHES
HANAMAULU - AHUKINI CUTOFF RD.
(Ahukini Road To Kauai Hardwoods)
Federal Aid Proj. No. F-051-1(7)
Scale: As Shown Date: Aug. 1986

SHEET No. 25 OF 29 SHEETS

FED. ROAD DIST. NO.	STATE	FED. AID PROJ. NO.	FISCAL YEAR	SHEET NO.	TOTAL SHEETS
HAWAII	HAW.	F-051-1(7)	1987	55	164

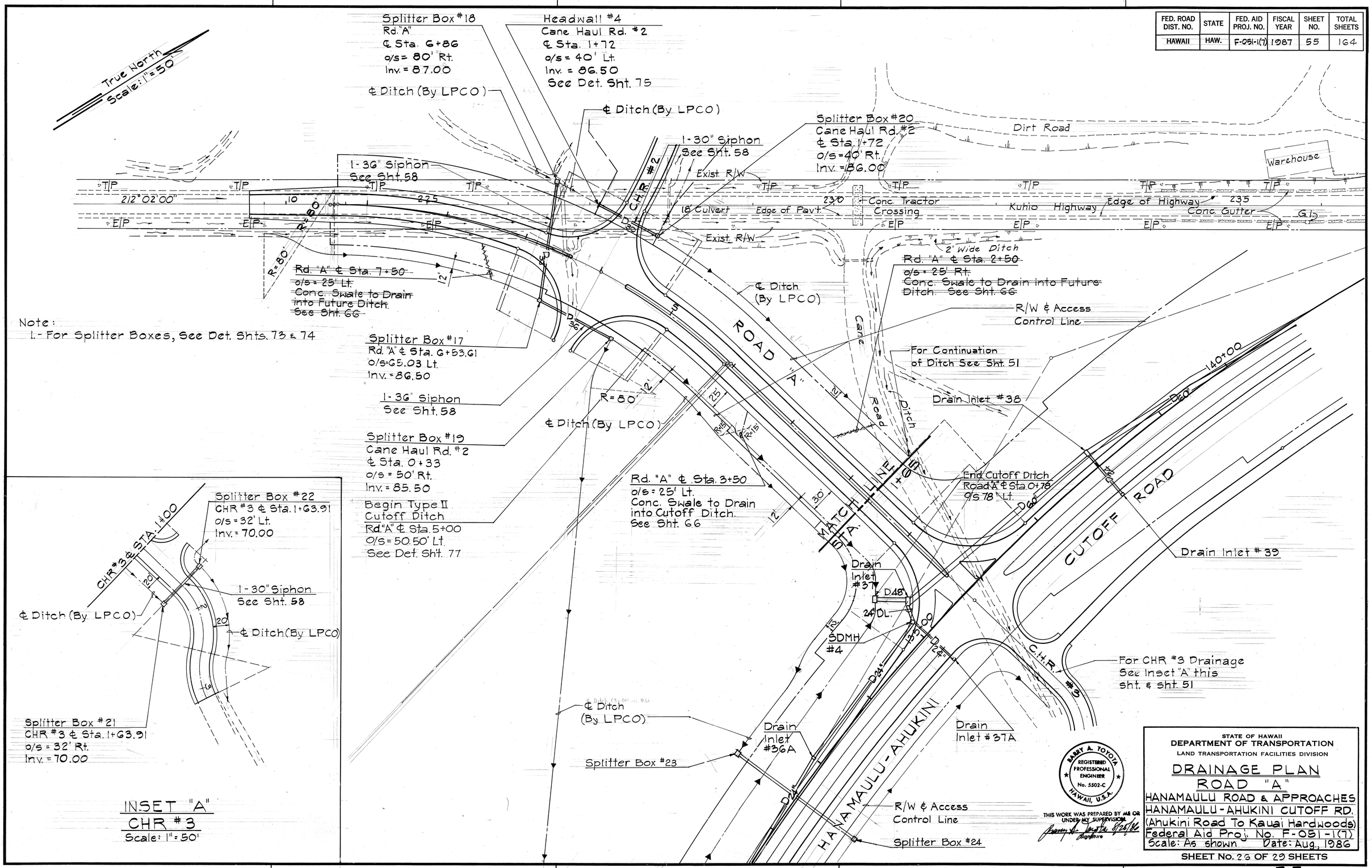

FED. ROAD DIST. NO.	STATE	FED. AID PROJ. NO.	FISCAL YEAR	SHEET NO.	TOTAL SHEETS
HAWAII	HAW.	F-051-1(7)	1987	56	164

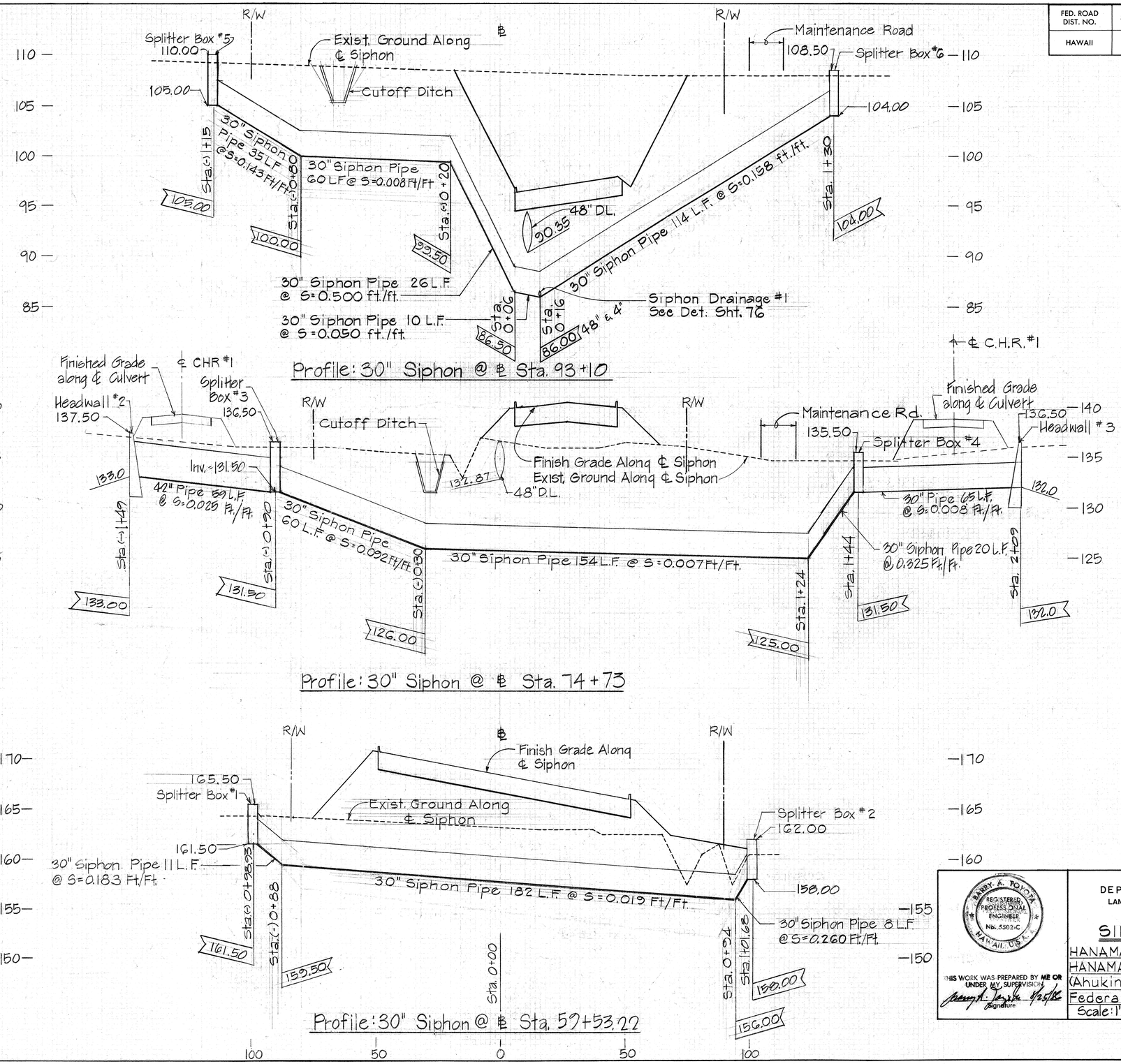

STATE OF HAWAII
DEPARTMENT OF TRANSPORTATION
LAND TRANSPORTATION FACILITIES DIVISION

BARRY A. TOYOTA
REGISTERED PROFESSIONAL ENGINEER
No. 5502-C
HAWAII, U.S.A.

THIS WORK WAS PREPARED BY ME OR UNDER MY SUPERVISION
Signature 8/25/86

SIPHON PROFILE

HANAMAULU ROAD & APPROACHES
HANAMAULU-AHUKINI CUTOFF RD.
(Ahukini Road To Kauai Hardwoods)
Federal Aid Proj. No. F-051-1(7)
Scale: 1"=20' Horiz., 1"=5' Vert. Date: Aug., 1986

SHEET NO. 27 OF 29 SHEETS

FED. ROAD DIST. NO.	STATE	FED. AID PROJ. NO.	FISCAL YEAR	SHEET NO.	TOTAL SHEETS
HAWAII	HAW.	F-051-1(7)	1987	57	164

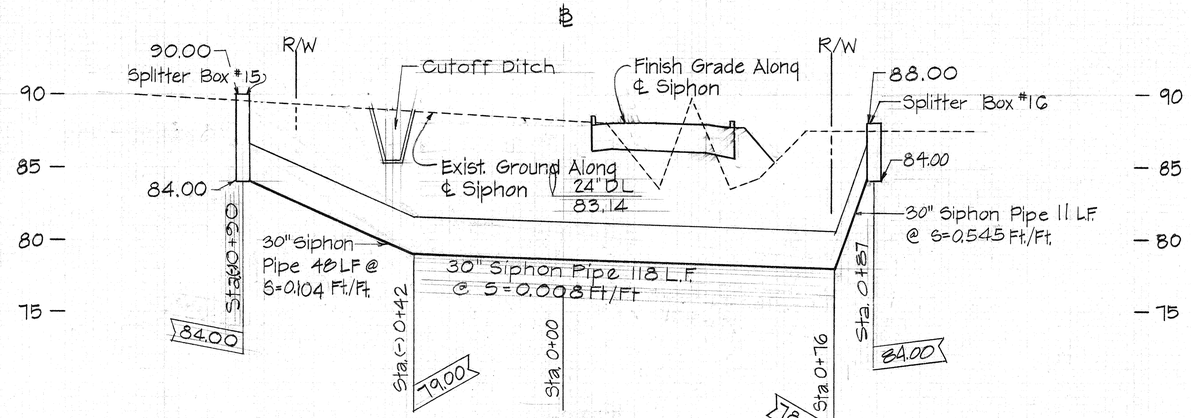

Profile: 30" Siphon @ ℄ Sta. 128+70

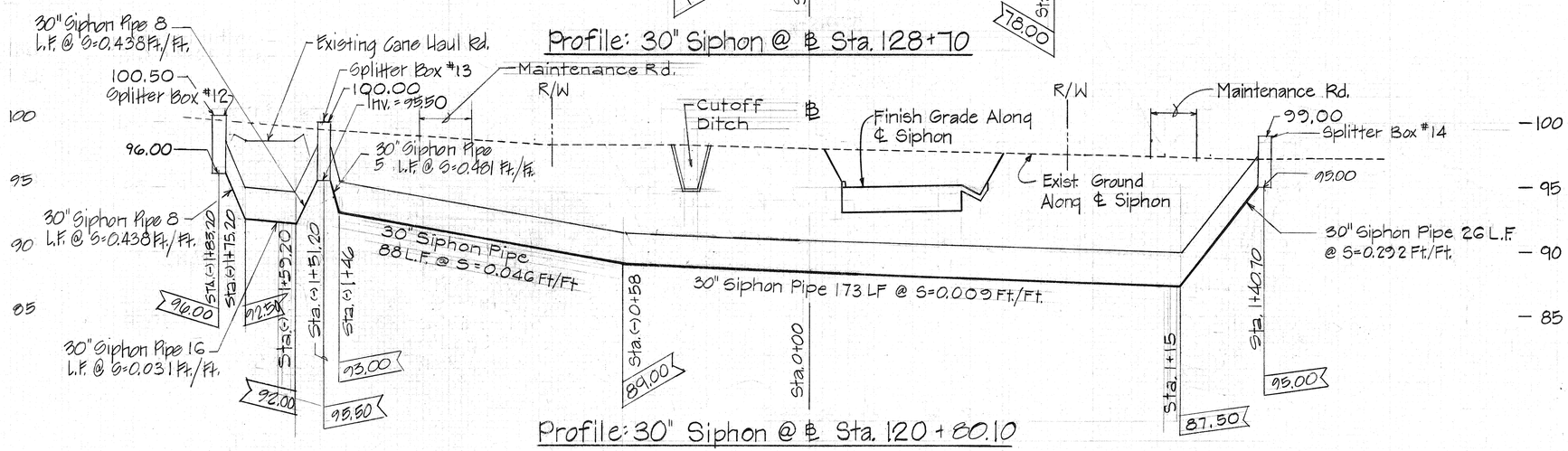

Profile: 30" Siphon @ ℄ Sta. 120+80.10

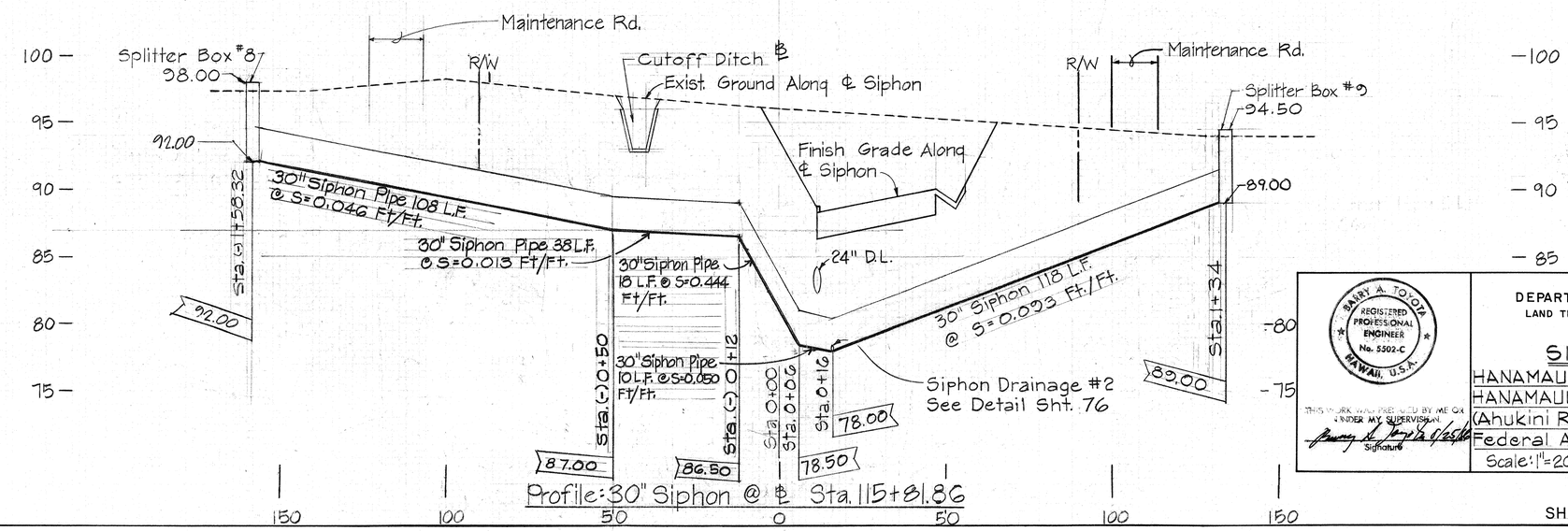

Profile: 30" Siphon @ ℄ Sta. 115+81.86

BARRY A. TOYODA
REGISTERED PROFESSIONAL ENGINEER
No. 5502-C
HAWAII, U.S.A.

THIS WORK WAS PREPARED BY ME OR UNDER MY SUPERVISION.

Signature

STATE OF HAWAII
DEPARTMENT OF TRANSPORTATION
LAND TRANSPORTATION FACILITIES DIVISION

SIPHON PROFILE

HANAMAULU ROAD & APPROACHES
HANAMAULU - AHUKINI CUTOFF RD.
(Ahukini Road To Kauai Hardwoods)
Federal Aid Proj. No. F-051-1(7)
Scale: 1"=20' Horiz., 1"=5' Vert. Date: Aug., 1986

SHEET NO. 28 OF 29 SHEETS

FED. ROAD DIST. NO.	STATE	FED. AID PROJ. NO.	FISCAL YEAR	SHEET NO.	TOTAL SHEETS
HAWAII	HAW.	F-051-1(7)	1987	58	164

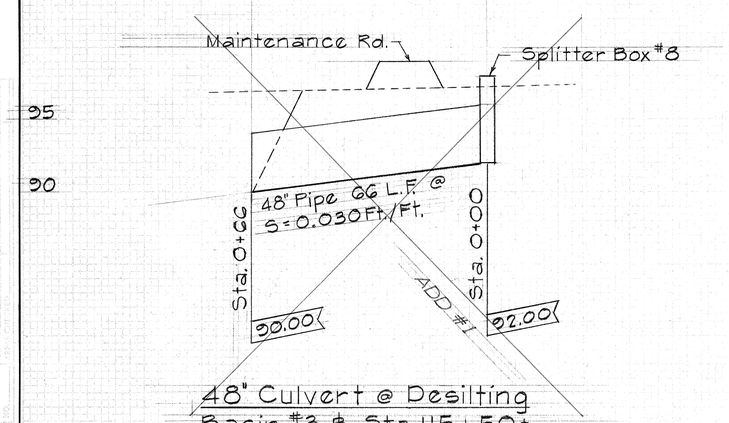

48" Culvert @ Desilting Basin #3 ℄ Sta. 115+50±

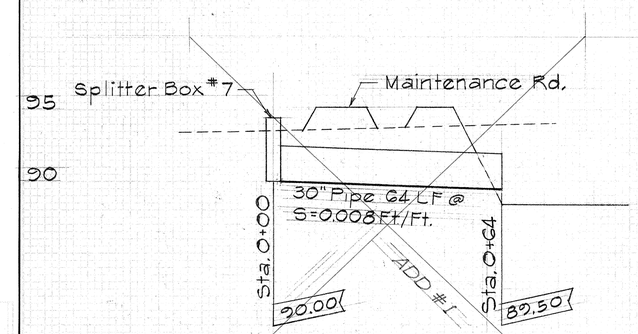

Profile: 30" Culvert @ Desilting Basin #3 ℄ Sta. 113+72.53

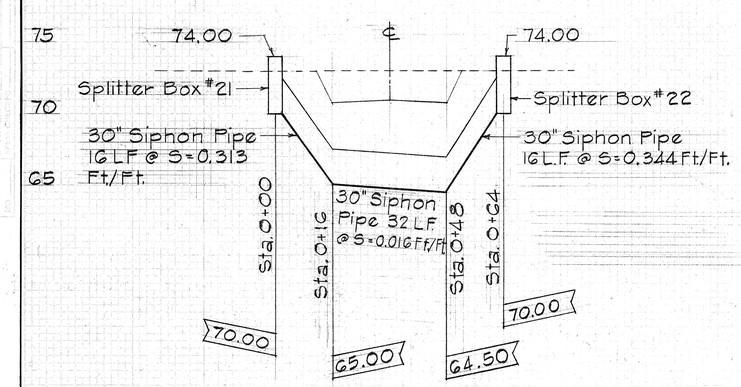

Profile: 30" Siphon @ CHR #3 ℄ Sta. 1+63.91

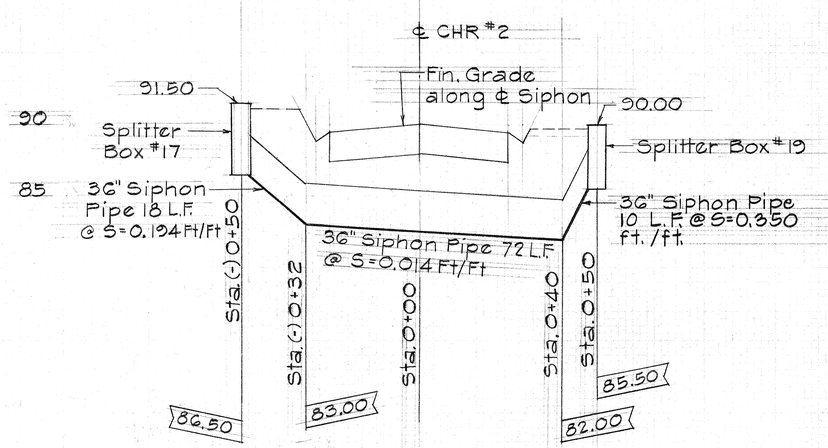

Profile: 36" Siphon @ CHR #2 ℄ Sta. 0+33

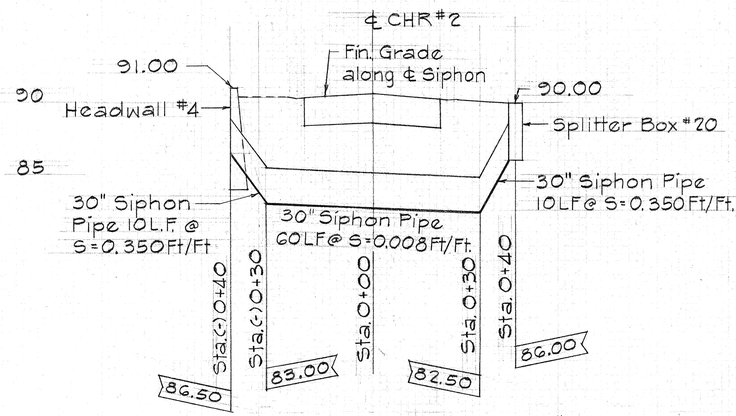

Profile: 30" Siphon @ CHR #2 ℄ Sta. 1+72

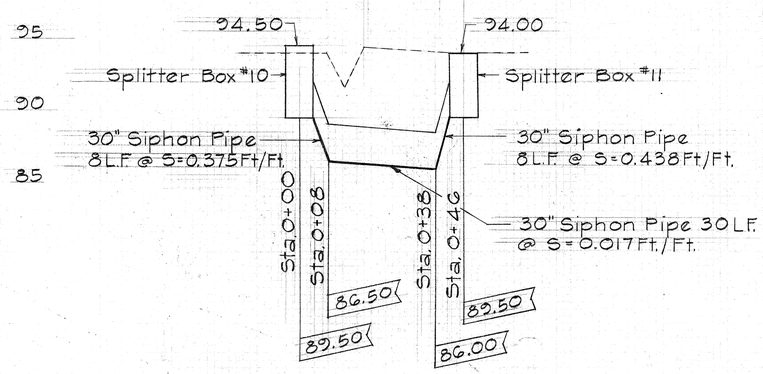

Profile: 30" Siphon @ Existing CHR ℄ Sta. 117+40 Rt.

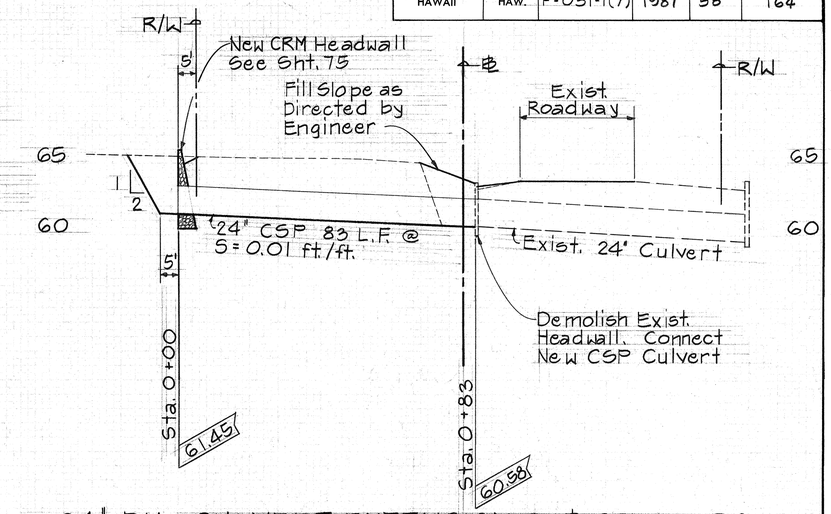

24" DIA. CULVERT EXTENSION @ ℄ STA. 161+90

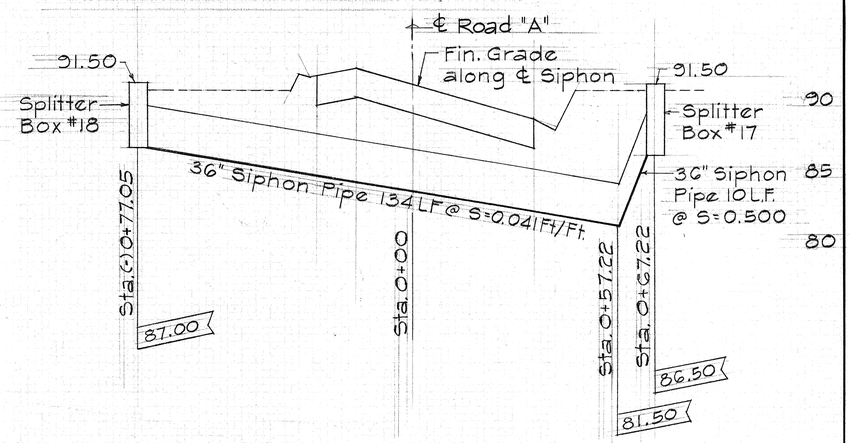

Profile: 36" Siphon @ Road "A" ℄ Sta. 6+71.48

MARY A. TOYOTA
REGISTERED PROFESSIONAL ENGINEER
No. 5502-C
HAWAII, U.S.A.

THIS WORK WAS PREPARED BY ME OR UNDER MY SUPERVISION.
Signature

STATE OF HAWAII
DEPARTMENT OF TRANSPORTATION
LAND TRANSPORTATION FACILITIES DIVISION

SIPHON PROFILE
HANAMAULU ROAD & APPROACHES
HANAMAULU - AHUKINI CUTOFF RD.
(Ahukini Road To Kauai Hardwoods)
Federal Aid Proj. No. F-051-1(7)
Scale: 1"=20' Horiz., 1"=5' Vert. Date: Aug. 1986

SHEET NO. 29 OF 29 SHEETS