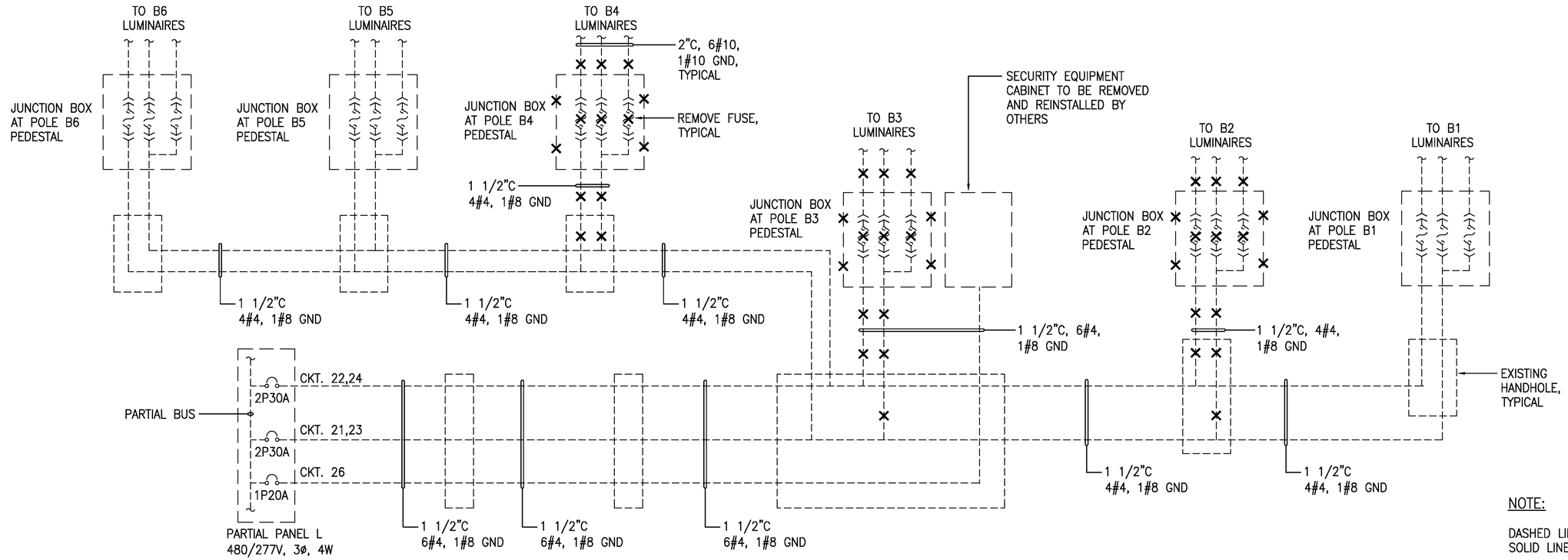

NOTE:

DASHED LINES DENOTE EXISTING.
SOLID LINES DENOTE NEW WORK.

PARTIAL PIER 1 LIGHT POLE WIRING DEMOLITION DIAGRAM – DEMOLITION WORK

NO SCALE

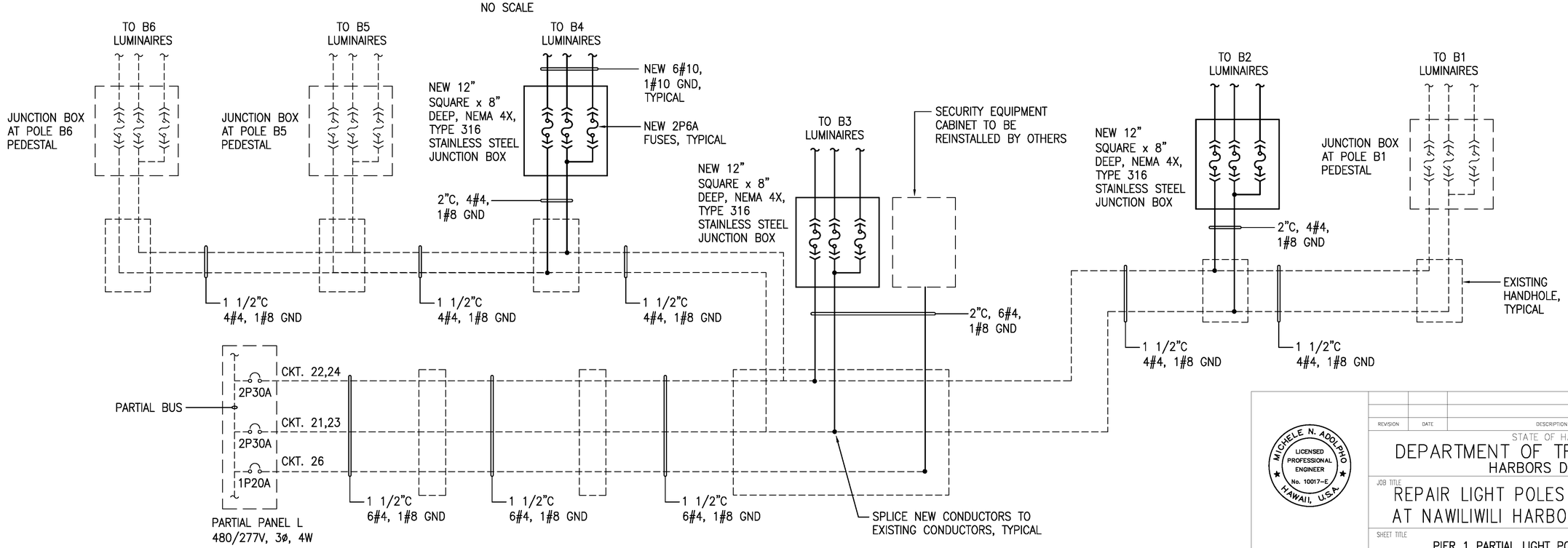

PARTIAL PIER 1 LIGHT POLE WIRING DIAGRAM – NEW WORK

NO SCALE

REVISION	DATE	DESCRIPTION	BY	APPROVED

MICHELE N. ADOLPHO LICENSED PROFESSIONAL ENGINEER No. 10017-E HAWAII, U.S.A.

THIS WORK WAS PREPARED BY ME OR UNDER MY SUPERVISION EXP 4-30-24

ECS, INC.

STATE OF HAWAII
DEPARTMENT OF TRANSPORTATION
HARBORS DIVISION

JOB TITLE
REPAIR LIGHT POLES AND PEDESTALS AT NAWILIWILI HARBOR, KAUAI, HAWAII

SHEET TITLE
PIER 1 PARTIAL LIGHT POLE WIRING DIAGRAMS

DESIGNED BY: MA
DRAWN BY: CAD
CHECKED BY: MA
DATE: 04/2023
SCALE: AS SHOWN

JOB NUMBER S70146

SHEET E-9

16 OF 17 SHTS

4/25/23-11:52 X:\044\044.097 Nawiliwili Piers 1 and 2\044.097 E-4 to E-10.001.dwg