FED. ROAD DIST. NO.	STATE	PROJ. NO.	FISCAL YEAR	SHEET NO.	TOTAL SHEETS
HAWAII	HAW.	HWY-K-01-94M	1994	6	10

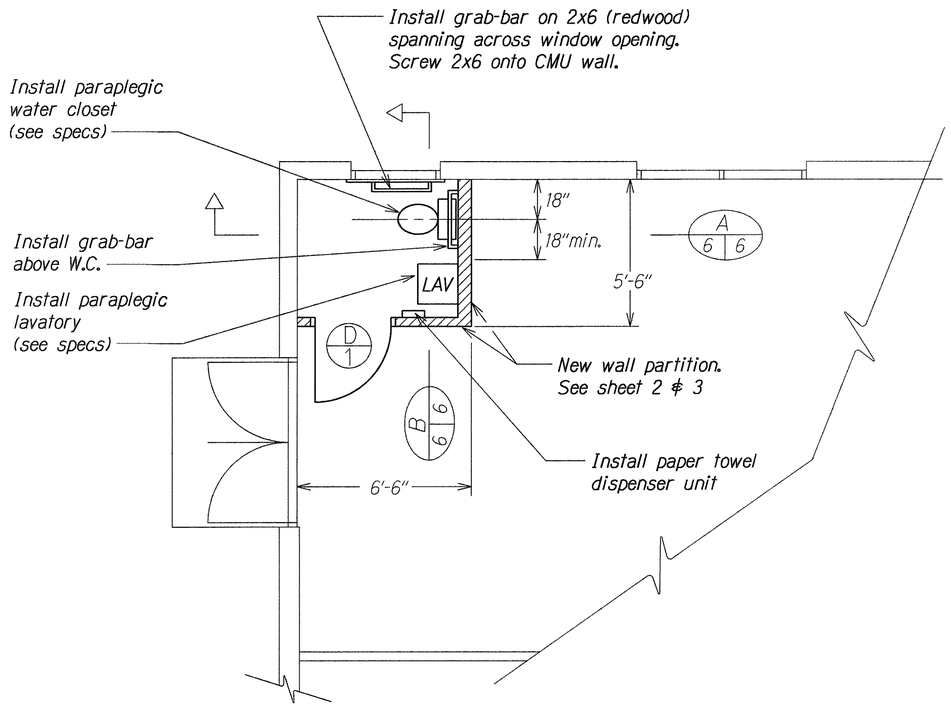

INSET B

NEW RESTROOM LAYOUT PLAN

Scale: 3/8"=1'

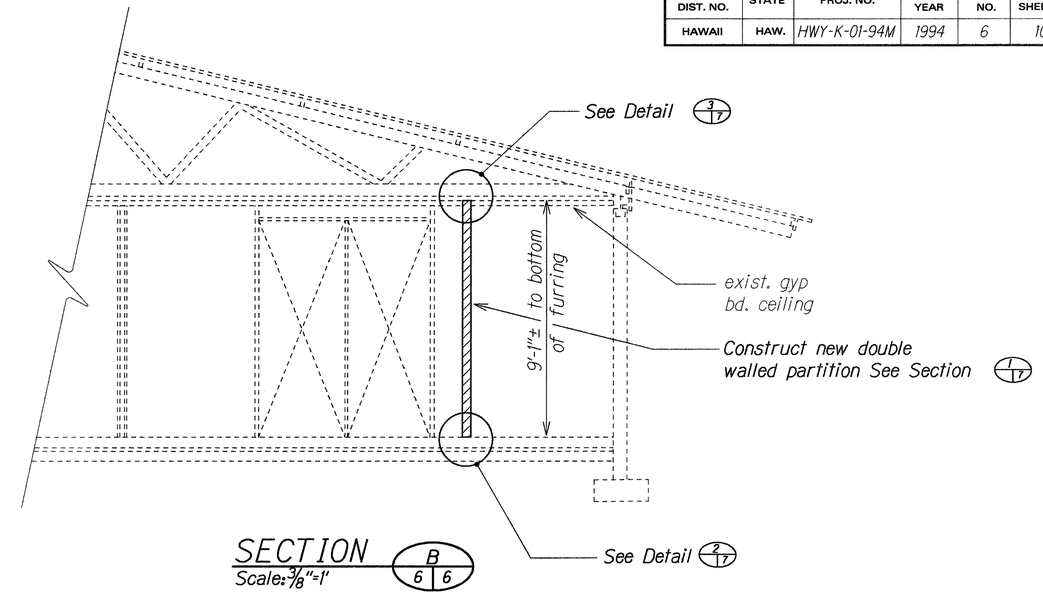

SECTION B 6 6

Scale: 3/8"=1'

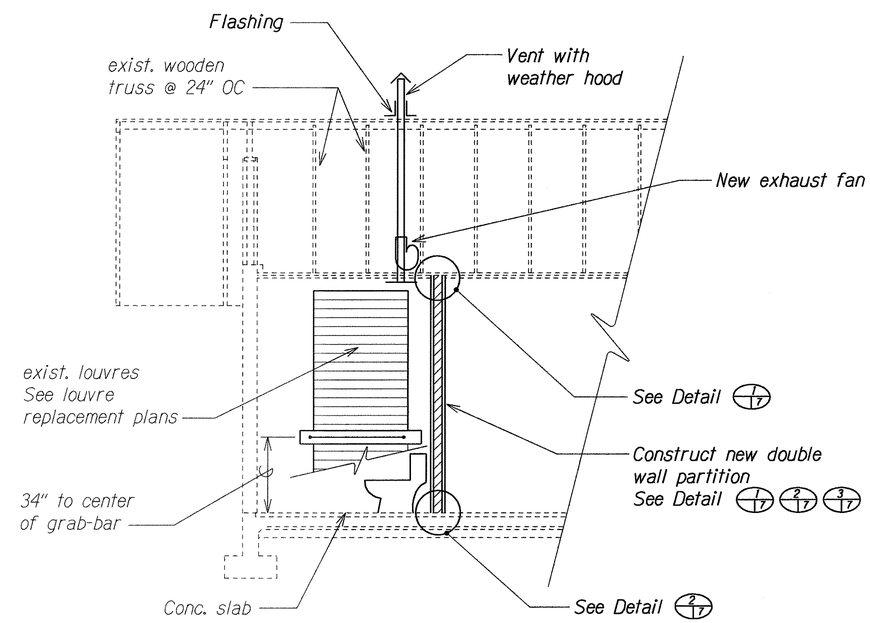

SECTION A 6 6

Scale: 3/8"=1'

DOOR D/1 SPECIFICATIONS

SIZE W x H x Thickness	MATERIAL Frame	MATERIAL Door	HARDWARE	LOUVRE	FRAME DETAILS	REMARKS
3' -0" x 7'-0" x 1 3/4"	Wood	Wood	See Sp. Prov.	None	Sht. No. 7	For material specs., see the Sp. Prov.

ORIGINAL PLAN	SURVEY PLOTTED BY	DATE
	DRAWN BY	
	TRACED BY	
NOTE BOOK	DESIGNED BY	
	QUANTITIES BY	
N.	CHECKED BY	

STATE OF HAWAII
DEPARTMENT OF TRANSPORTATION
HIGHWAYS DIVISION

PLAN AND WALL DETAILS

NEW RESTROOM

KAPAA BASEYARD RENOVATIONS

Project No. HWY-K-01-94M

Scale: As Shown Date: Sept., 1993

SHEET No. 2 OF 6 SHEETS