STATE	FED AID PROJ NO	FISCAL YEAR	SHEET NO	TOTAL SHEETS
HAW	A-270-01-00 SECT. III	19 00	17	35

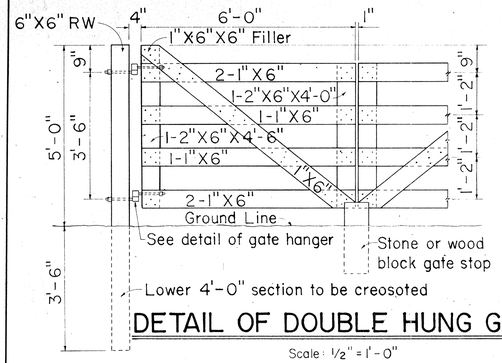

DETAIL OF DOUBLE HUNG GATE

Scale: 1/2" = 1'-0"

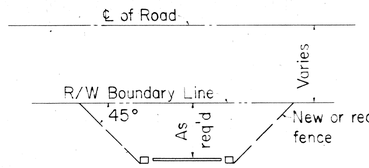

Layout showing hurdle placed below culvert in a position which will be cattle tight.

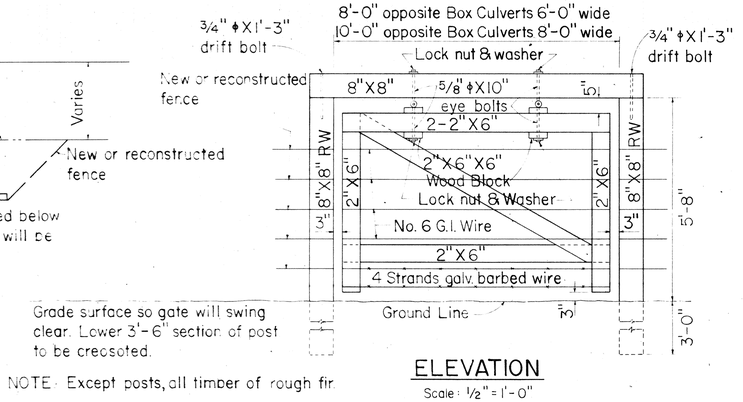

Grade surface so gate will swing clear. Lower 3'-6" section of post to be creosoted.

NOTE: Except posts, all timber of rough fir.

ELEVATION

Scale: 1/2" = 1'-0"

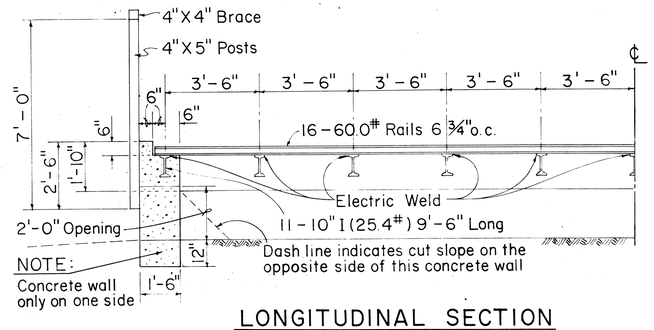

NOTE: Concrete wall only on one side

LONGITUDINAL SECTION

Scale: 3/8" = 1'-0"

DETAILS OF HURDLE

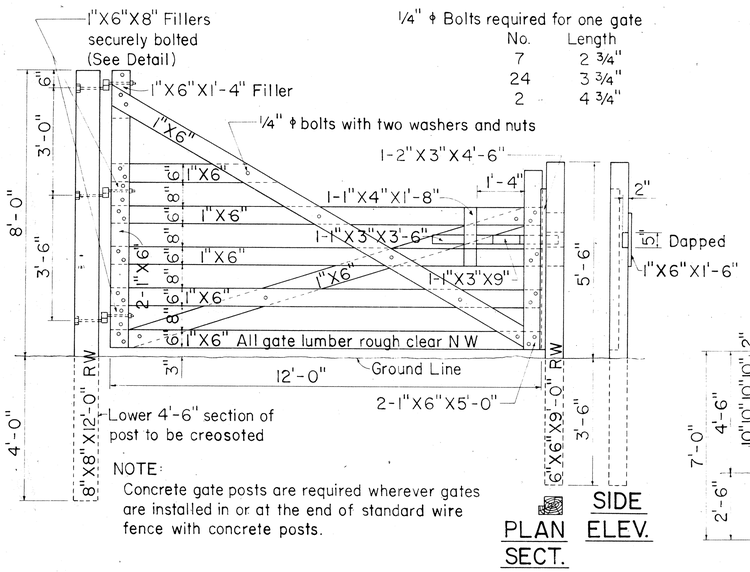

NOTE:
Concrete gate posts are required wherever gates are installed in or at the end of standard wire fence with concrete posts.

PLAN SECT. SIDE ELEV.

DETAIL OF CATTLE GATE

Scale: 1/2" = 1'-0"

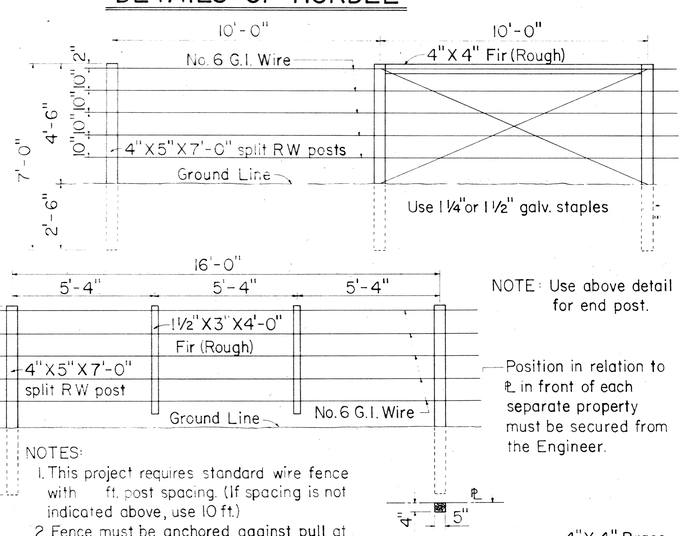

NOTE: Use above detail for end post.

NOTES:
1. This project requires standard wire fence with ft. post spacing. (If spacing is not indicated above, use 10 ft.)
2. Fence must be anchored against pull at least every 500 ft. and also at top of rise and bottom of dip.
3. Lower 3'-0" section of posts to be creosoted.

DETAILS OF STANDARD WIRE FENCE WITH WOOD POSTS

Scale: 3/8" = 1'-0"

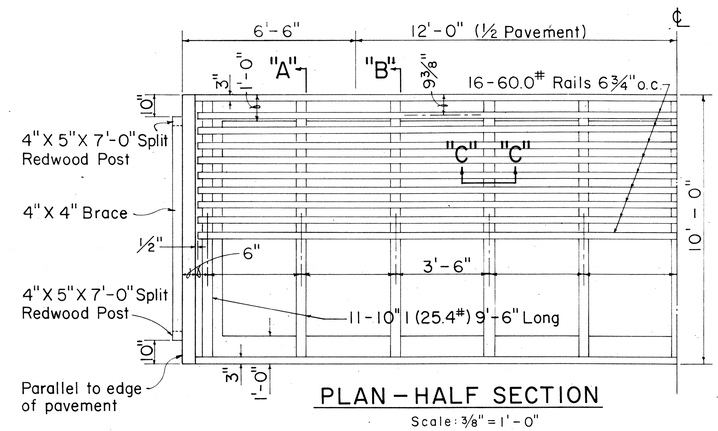

PLAN – HALF SECTION

Scale: 3/8" = 1'-0"

NOTE:
All metal joints shall be welded continuously with 3/8" fillets.

NOTE: Use 3/4" ϕ X 11" bolts for Cattle Gate

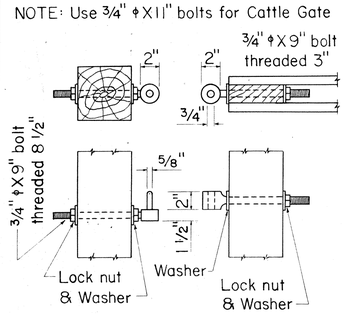

DETAIL OF GATE HANGER

Scale: 1 1/2" = 1'-0"

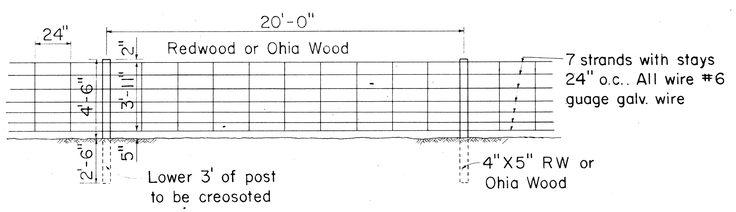

DETAIL OF WOVEN WIRE FENCE

Scale: 1/4" = 1'-0"

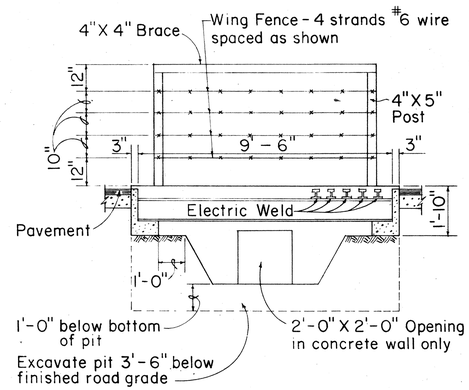

SECTION "A-A"

Scale: 3/8" = 1'-0"

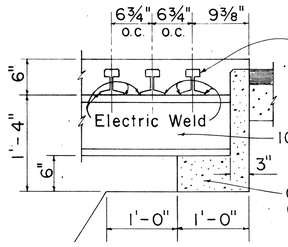

SECTION "B-B"

Scale: 1" = 1'-0"

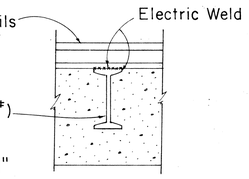

SECTION "C-C"

Scale: 1" = 1'-0"

CATTLE GUARD DETAILS

Scales: As Noted

STATE OF HAWAII
DEPARTMENT OF TRANSPORTATION
HIGHWAYS DIVISION

STANDARD DETAILS

KAWAIHAE - MAHUKONA ROAD
PROJ. A-270-01-00
SECTION III

Scales: As Noted Date:

SHEET No. 1 OF 1 SHEETS

17