FED. ROAD DIST. NO.	STATE	PROJ. NO.	FISCAL YEAR	SHEET NO.	TOTAL SHEETS
HAWAII	HAW.	250A-02-09	2012	6	14

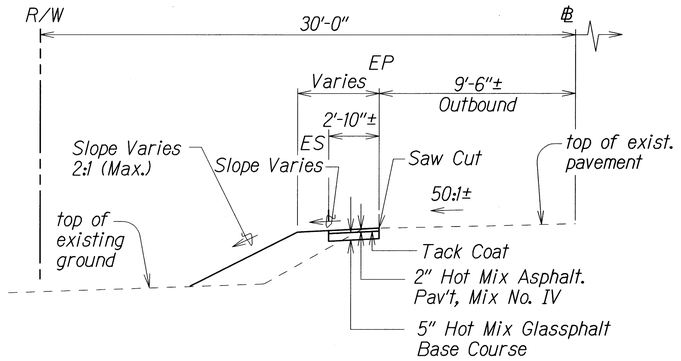

PARTIAL TYPICAL SECTION
℄ STA. 225+50 LT. TO ℄ STA. 225+80 LT. (OUTBOUND)

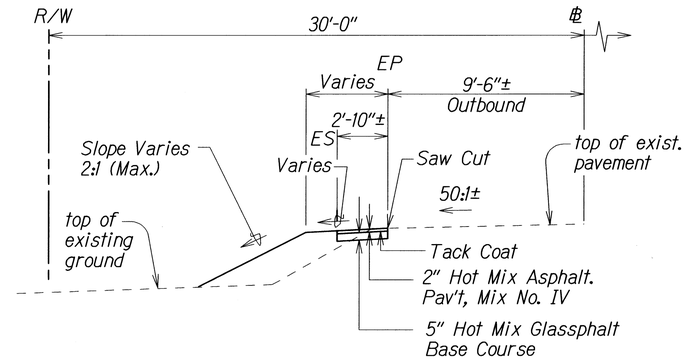

PARTIAL TYPICAL SECTION
℄ STA. 226+25 LT. TO ℄ STA. 226+50 LT. (OUTBOUND)

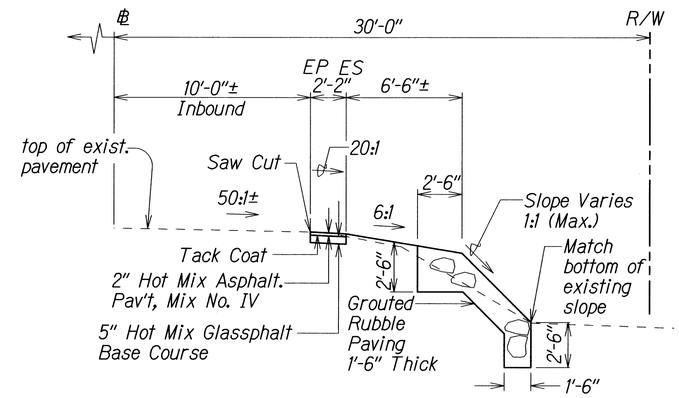

PARTIAL TYPICAL SECTION
℄ STA. 225+80 RT. TO ℄ STA. 226+20 RT. (INBOUND)

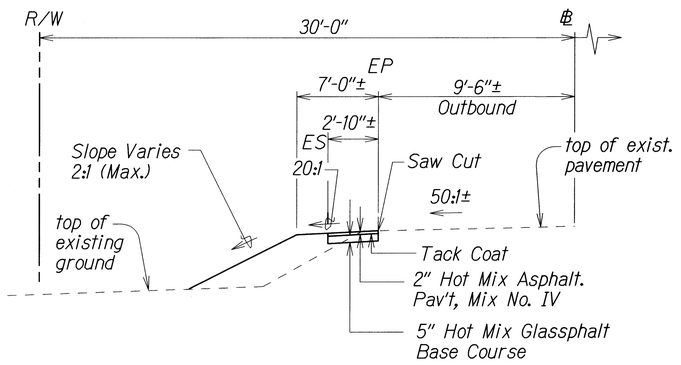

PARTIAL TYPICAL SECTION
℄ STA. 225+80 LT. TO ℄ STA. 226+03± LT. (OUTBOUND)

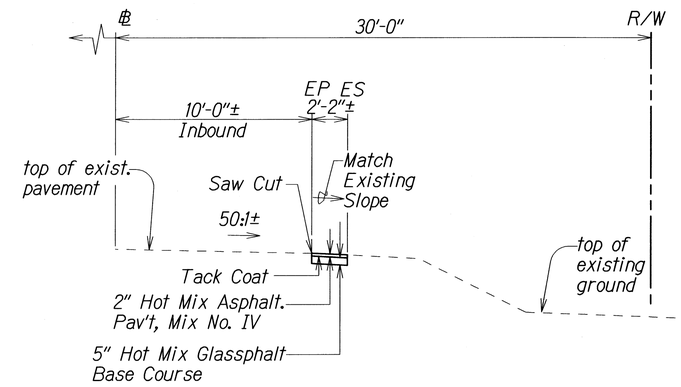

PARTIAL TYPICAL SECTION
℄ STA. 225+50 RT. TO ℄ STA. 225+65 RT. (INBOUND)

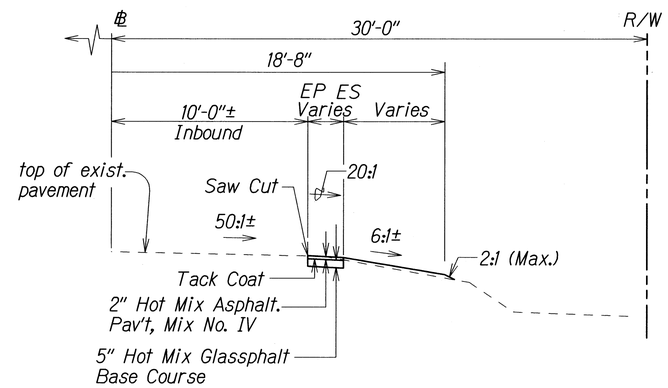

PARTIAL TYPICAL SECTION
℄ STA. 226+20 RT. TO ℄ STA. 226+50 RT. (INBOUND)

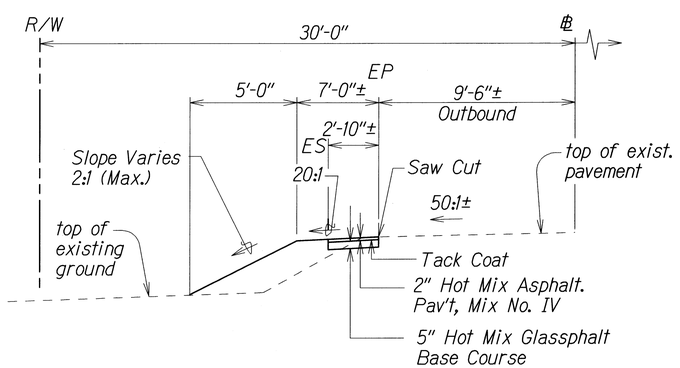

PARTIAL TYPICAL SECTION
℄ STA. 226+03± LT. TO ℄ STA. 226+25 LT. (OUTBOUND)

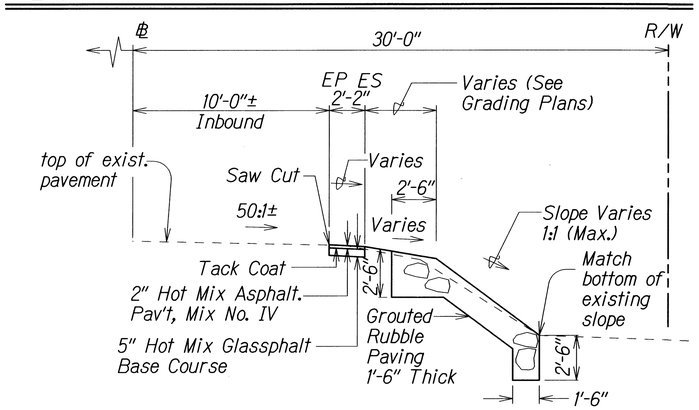

PARTIAL TYPICAL SECTION
℄ STA. 225+65 RT. TO ℄ STA. 225+80 RT. (INBOUND)

ORIGINAL PLAN	SURVEY PLOTTED BY	DATE
	DRAWN BY X	
	TRACED BY	
NOTE BOOK dfxx	DESIGNED BY X	
N. Kdgn	QUANTITIES BY	
	CHECKED BY	

STATE OF HAWAII
DEPARTMENT OF TRANSPORTATION
HIGHWAYS DIVISION

TYPICAL SECTIONS
KOHALA MOUNTAIN ROAD
DRAINAGE IMPROVEMENTS, PHASE 2
VICINITY OF M.P. 12.88
Project No. 250A-02-09

Scale: 1/4"=1'-0" Date: March, 2012

SHEET No. H1 OF 6 SHEETS