FED. ROAD DIST. No.	STATE	FED. AID PROJ. No.	FISCAL YEAR	SHEET No.	TOTAL SHEETS
HAWAII	HAW.	S-0250(2)	1961	2	16

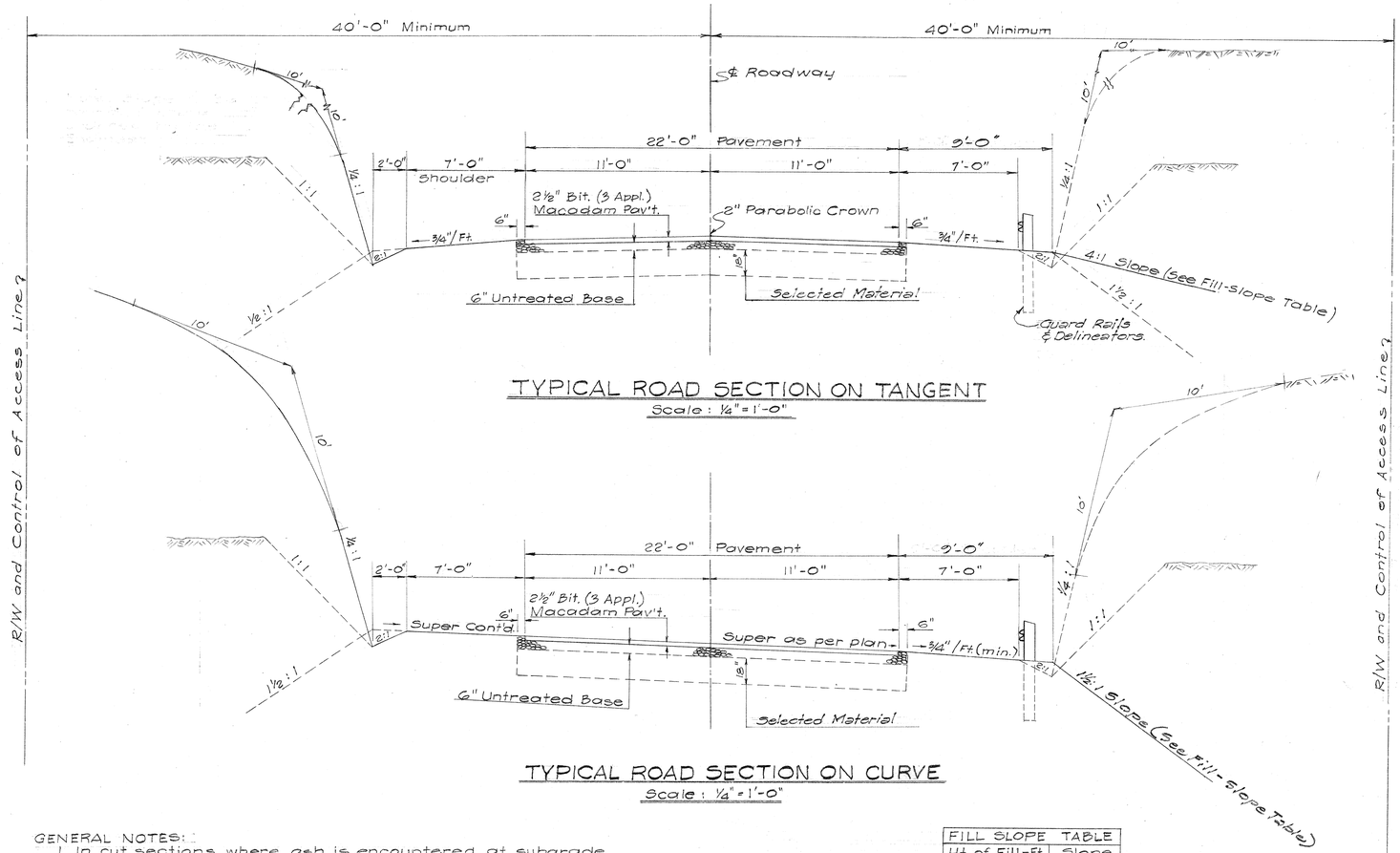

TYPICAL ROAD SECTION ON TANGENT
Scale: ¼" = 1'-0"

TYPICAL ROAD SECTION ON CURVE
Scale: ¼" = 1'-0"

GENERAL NOTES:

1. In cut sections where ash is encountered at subgrade, the same shall be excavated 18" below subgrade and replaced with selected material from roadway excavation.
2. Cut slopes shall be rounded where called for in the plans or ordered by the Engineer
3. Shoulder Widths: Fill Sections 9'-0"
   Cut Sections 7'-0"

FILL SLOPE TABLE	
Ht. of Fill-Ft.	Slope
0-4	4:1
4-10	3:1 to 2:1
10-Over	1½:1

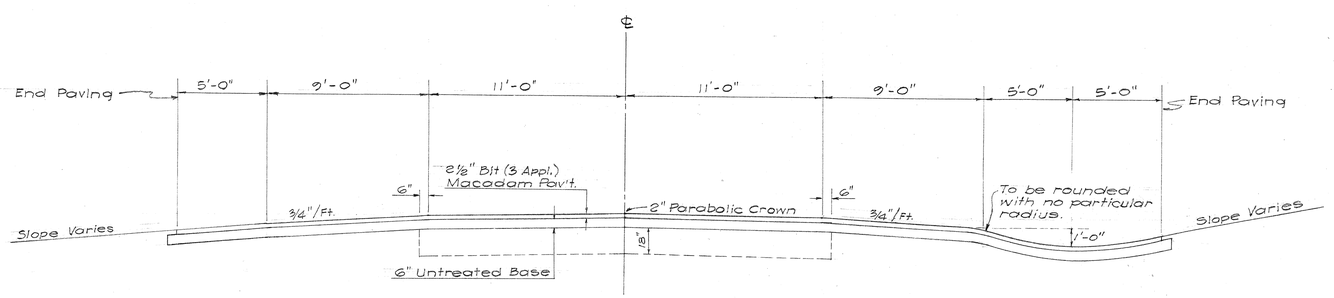

TYPICAL SIDE ROAD SECTION
Scale: ¼" = 1'-0"

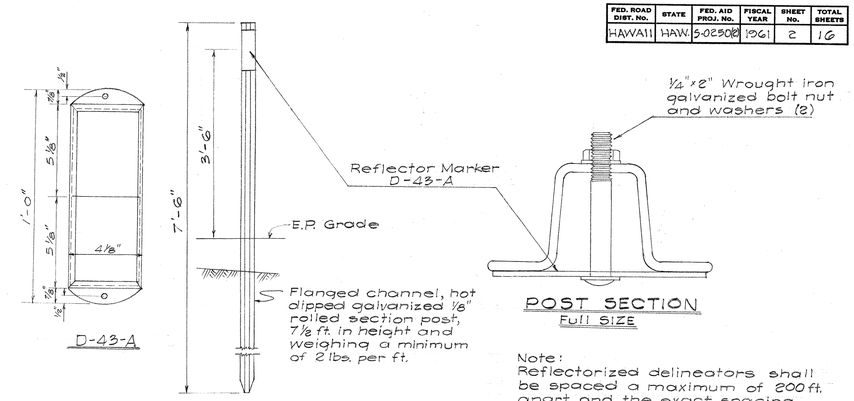

D-43-A

TYPICAL SECTION
Scale: ¾" = 1'-0"

POST SECTION
Full Size

Note:
Reflectorized delineators shall be spaced a maximum of 200 ft. apart and the exact spacing shall be determined by the Engineer in the field.

DETAIL OF REFLECTORIZED DELINEATOR

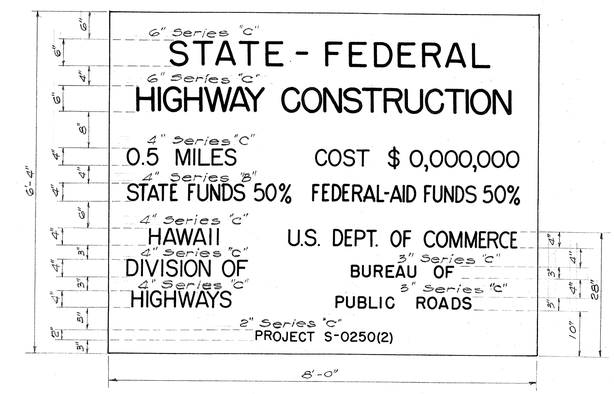

SECONDARY SYSTEM PROJECT SIGN
Scale: ¾" = 1'-0"

LOCATION OF SIGNS

Beg. of Proj. Rt.	Sta. 466+00	Proj. S-0250(1)
End of Proj. Lt.	±300' South of Sta. 493+00	

ORIGINAL PLAN		
	SURVEY PLOTTED BY	DATE
	DESIGNED BY	
	DRAWN BY	
	TRACED BY	
NOTE BOOK	QUANTITIES BY	
No.	QUANTITIES CHECKED BY	
	CHECKED BY	

DEPARTMENT OF TRANSPORTATION
DIVISION OF HIGHWAYS
STATE OF HAWAII

TYPICAL SECTIONS
KOHALA MOUNTAIN ROAD
FASP S-0250(2)
Scale: As Noted Dec. 1960

SHEET No. OF SHEETS

2

PRINTED ON DIEPO 1000H CLEARPRINT