FED. ROAD DIST. NO.	STATE	PROJ. NO.	FISCAL YEAR	SHEET NO.	TOTAL SHEETS
HAWAII	HAW.	240A-02-71	1972	19	29

DESIGN NOTES

DESIGN SPECIFICATIONS AASHO

Standard Specifications for Highway Bridges (10th Edition) with subsequent interim specifications.

DESIGN LOADS: HS-20-44

DESIGN STRESSES:

1. R.C. beams & slabs - See AASHO Specifications and Special Provisions except as otherwise noted.

Class A	Class E
f'c = 3,000 psi	4,500 psi
fc = 1,200 psi	1,800 psi
n = 10	8
fs = ASTM A615, see Special Provisions	

2. Prestressed Girders

f'c = 5,500 psi | 1/2" dia. 7 wire strands
f'ci = 4,000 psi | Tensioning load = 25,200 lbs. per strand
Design load = 20,160 lbs. per strand.
Forms must be removed and the beams inspected before the strands are cut

GENERAL NOTES

MATERIALS:

1. All concrete shall be class A except as otherwise noted on plans. Concrete for prestressed concrete girders see Standard Specifications and as noted under Design Stresses
2. Preformed fabric bridge bearing pads are incidental to concrete and will not be paid for separately.
3. An admixture conforming to the requirements of Subsection 711.03(B) Water-Reducing Admixtures, shall be incorporated into all concrete mixtures.

CONSTRUCTION METHODS:

1. See Standard Specifications and Special Provisions
2. For Concrete finish see Special Provisions. Concrete seats and creep blocks to be poured monolithically with pier. Top surfaces of conc seats to have a hard trowel finish.
3. See details for additional surface finish.
4. In general, top & edge of concrete deck of superstructure shall be constructed to follow the finish roadway vertical & horizontal curves and grades.
5. Bridge decks may be finished by the manual finishing method.

REFERENCE:

1. Refer to Standard Detailed Drawings for additional details not covered by detailed plans.
2. Refer to Typical Details drawing sheet Nos. T-1 thru T-4 inclusive, except for modification as may be required by special conditions. For such modifications see corresponding detailed plans.

GENERAL:

1. Additional structural fill where indicated on detailed drawings shall be incidental to structural excavation, roadway excavation, or imported borrow.
2. All items noted incidental will not be paid for separately.

SYMBOLS & ABBREVIATION

(A-1) Pier column number

Location pier line number (1) (A) Column line alphabet

(1)(2) -Location concrete seat line number
(00.0) -Bottom footing elevation
[00.0] -Pile cut-off elevation
{00.0} -Pile tip elevation

(A/7) —Section Designation
—Sht. number detail is drawn on
S-1 (X) -Boring number and designation

℄ -Centerline
F-1 -Spread Footing type
S.E. -Superelevation
G-1, G-2 -Girder numbers.
I.B. -Inbound
O.B. -Outbound
℄ -Baseline
Pt. -Point
Exp. -Expansion
No. -Number
Cont. -Continuous
E.F. -Each Face
B.F. -Both Face
N.F. -Near Face
F.F. -Far Face
W.P. -Working Point
ea. -each
Bal. -Balance
Bot, Bott -Bottom
T -Top
Ext -Exterior
Int. -Interior
oc -on center
Typ -Typical
G.R.P. -Grouted Rubble Paving
C.R.M. -Cement Rubble Masonry
W.W.F. -Welded Wire Fabric
Str. -Straight
Stirr. -Stirrup

ORIGINAL PLAN	SURVEY PLOTTED BY	DATE
	DRAWN BY	
	TRACED BY	
NOTE BOOK	DESIGNED BY	
	QUANTITIES BY	
No.	CHECKED BY	

STATE OF HAWAII
DEPARTMENT OF TRANSPORTATION
HIGHWAYS DIVISION

TYPICAL DETAILS
NOTES AND ABBREVIATIONS

WAIPUNAHOE STREAM BRIDGE

Proj. No. 240A-02-71 April 1970

SHEET No. T-1 OF 4 SHEETS

PRINTED ON NO. 1000H CLEARPRINT

FED. ROAD DIST. NO.	STATE	PROJ. NO.	FISCAL YEAR	SHEET NO.	TOTAL SHEETS
HAWAII	HAW.	240A-02-71	1972	20	29

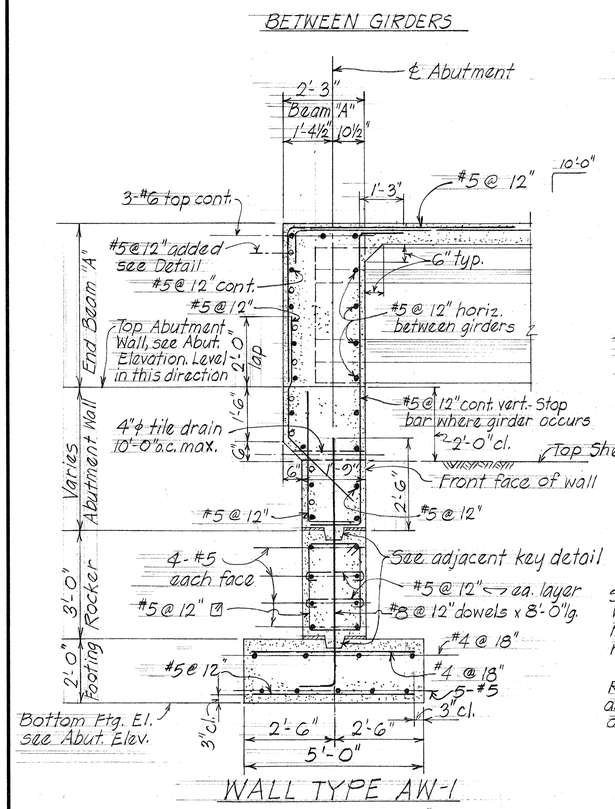

WALL TYPE AW-1

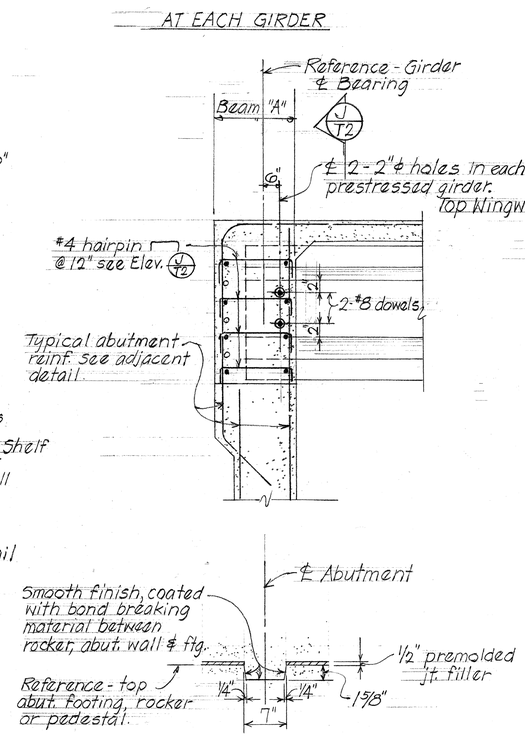

KEY DETAIL

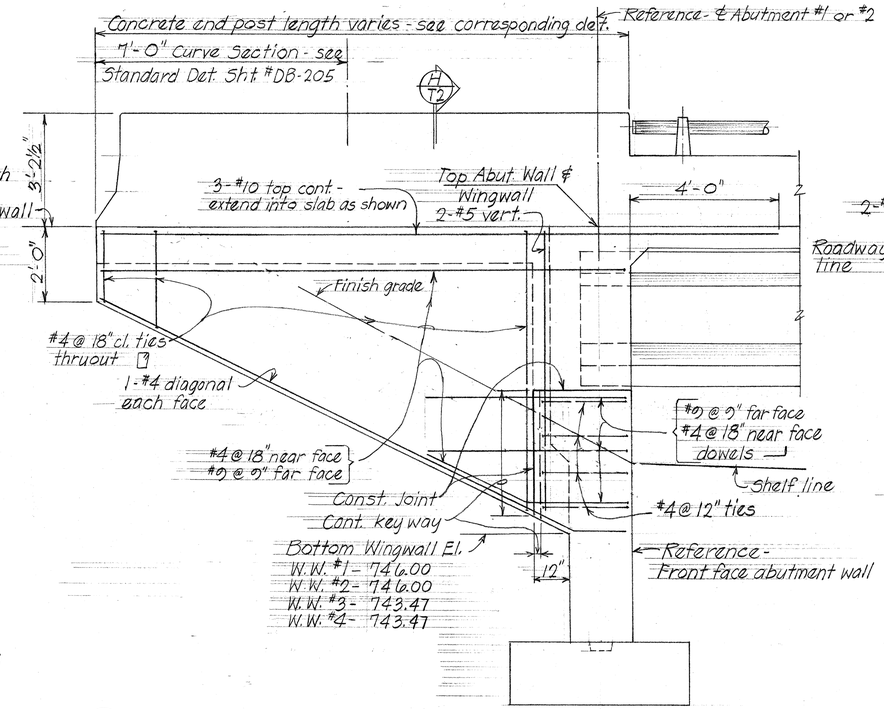

G T2 ELEVATION - TYPICAL ABUTMENT WINGWALL

G2 T2 SIMILAR EXCEPT OPPOSITE HAND

Scale: 1/2" = 1'-0"

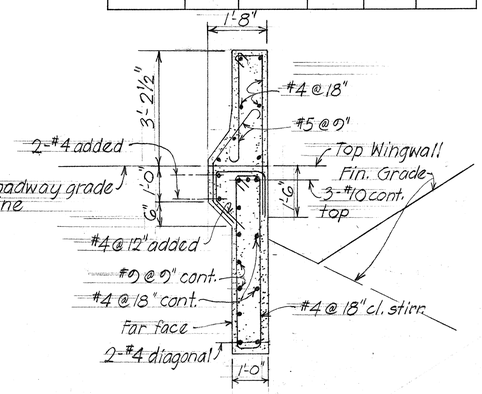

SECTION H T2

Scale: 1/2" = 1'-0"

TYPICAL ABUTMENT SECTION F T2

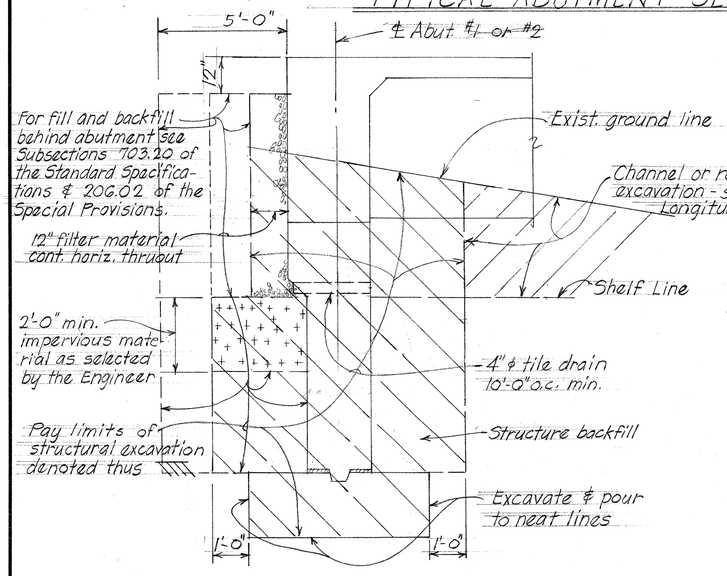

TYPICAL ABUTMENT STRUCTURAL EXCAVATION

PAY LIMITS & BACKFILL DETAILS

Not to Scale

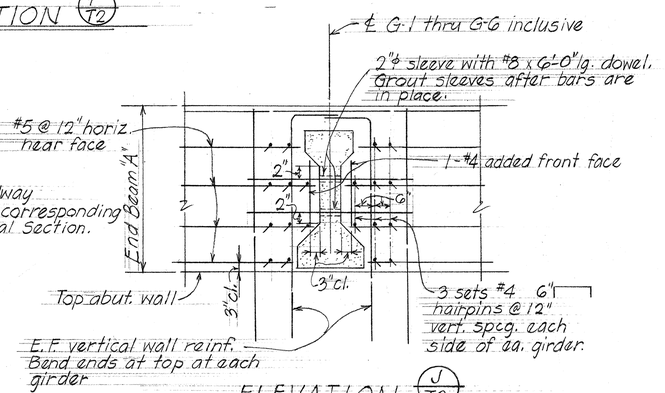

ELEVATION J T2

Scale: 1/2" = 1'-0"

ORIGINAL PLAN		DATE
	SURVEY PLOTTED BY	
	TRACED BY KY	
	DESIGNED BY	
NOTE BOOK	QUANTITIES BY	
No.	CHECKED BY	

STATE OF HAWAII
DEPARTMENT OF TRANSPORTATION
HIGHWAYS DIVISION

TYPICAL DETAILS
ABUTMENT DETAILS
WAIPUNAHOE STREAM BRIDGE

Project No. 240A-02-71 April 1970

SHEET No. T2 OF 4 SHEETS

20

PRINTED ON NO. 1000H CLEARPRINT

FED. ROAD DIST. NO.	STATE	PROJ. NO.	FISCAL YEAR	SHEET NO.	TOTAL SHEETS
HAWAII	HAW.	240A-02-71	1972	21	20

AASHO-PCI STANDARD BRIDGE GIRDER DIMENSION

GIRDER TYPE	H	X	Y	a	b	c	d	e	f	g	J	k	ℓ	m	n
~~I~~	~~2'-4"~~	~~1'-0"~~	~~1'-4"~~	~~5"~~	~~5"~~	~~11"~~	~~3"~~		~~4"~~	~~6"~~	—	~~3"~~	~~5"~~		
~~II~~	~~3'-0"~~	~~1'-0"~~	~~1'-6"~~	~~6"~~	~~6"~~	~~1'-3"~~	~~3"~~		~~6"~~	~~6"~~	—	~~3"~~	~~6"~~		
III	3'-9"	1'-4"	1'-10'	7"	7½"	1'-7"	4½"	—	7"	7"	—	4½"	7½"		
~~IV~~	~~4'-6"~~	~~1'-8"~~	~~2'-2"~~	~~8"~~	~~9"~~	~~1'-11"~~	~~6"~~	—	~~8"~~	~~8"~~		~~6~~	~~9"~~		

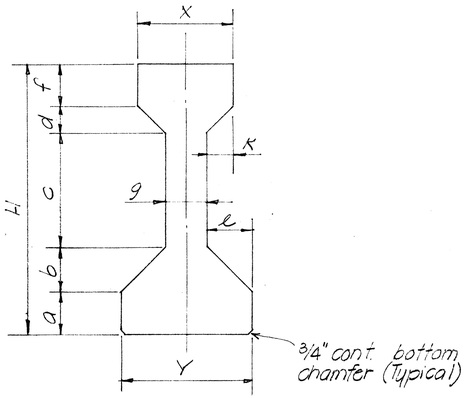

TYPE I THRU TYPE IV

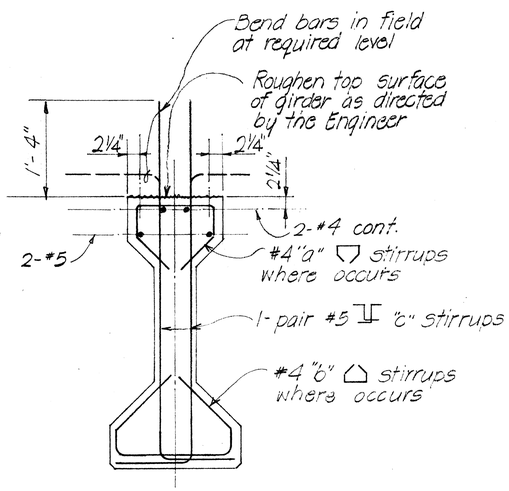

TYPE I THRU TYPE IV

TYPICAL SECTION PRESTRESSED CONC. GIRDERS

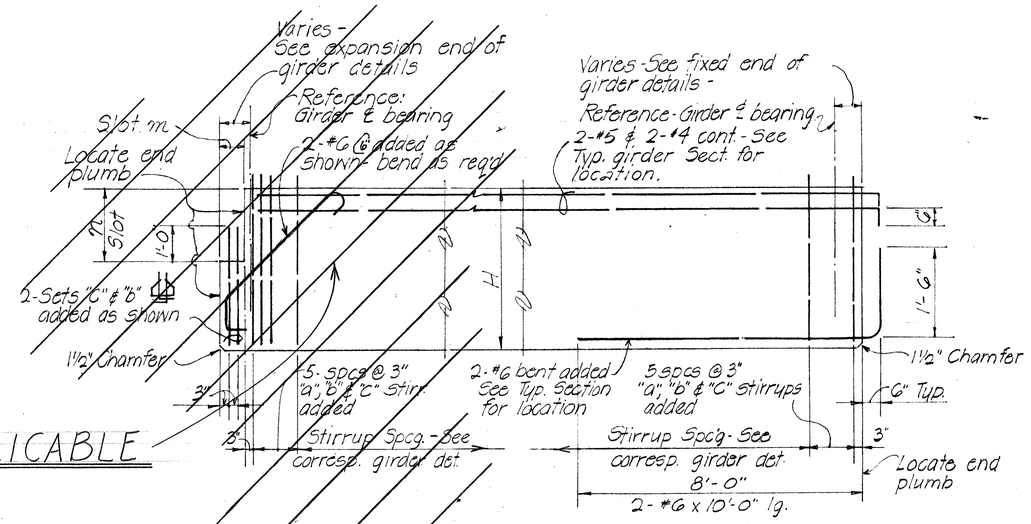

NOT APPLICABLE

EXPANSION END — HINGED OR FIXED END

TYPICAL DETAILS - AT ENDS OF GIRDER

BUNDLING OF PRESTRESSING REINFORCEMENT

ARRANGEMENT AND CLEARANCE FOR POST TENSIONED UNITS	ARRANGEMENT AND CLEARANCE FOR PRETENSIONED STRANDS
1. Horizontal clearance between units equals 2" min. 2. Units may be bundled vertically in groups of 3 maximum. 3. Vertical clearance between bundled units equal 3" minimum. 4. Approval of the Engineer is required for deviation.	1. Strands may be bundled in groups as shown. 2. The minimum distance "S" between groups or individual strands is 2" for ½" strands. 3. "S" is measured between centers of adjacent strands.

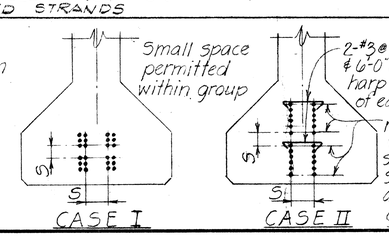

GENERAL NOTES

DESIGN LOADS: HS-20-44

1- Prestressed Girders -
f'c = psi
fci = psi
½" diam. 7 wire strands
Tensioning Load = 25,200 lbs. per strands.
Design Load = 20,160 lbs. per strands
Forms must be removed and the beams inspected before the strands are cut.

For additional holes and inserts in prestressed girders for Beam connections, refer to corresponding beam details.

STATE OF HAWAII
DEPARTMENT OF TRANSPORTATION
HIGHWAYS DIVISION

TYPICAL DETAILS
PRESTRESSED GIRDER
WAIPUNAHOE STREAM BRIDGE

Project No. 240A-02-71 April 1970

SHEET No. T-3 OF 4 SHEETS

ORIGINAL PLAN | SURVEY PLOTTED BY | DRAWN BY | TRACED BY | DESIGNED BY | QUANTITIES BY | CHECKED BY | DATE | NOTE BOOK | No.

K+E CRYSTALENE® LA 2920 TRACING PAPER

FED. ROAD DIST. NO.	STATE	PROJ. NO.	FISCAL YEAR	SHEET NO.	TOTAL SHEETS
HAWAII	HAW.	240A-02-71	1972	22	29

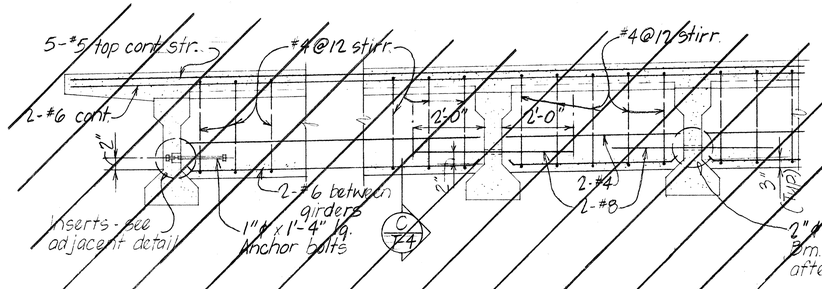

AT EXTERIOR GIRDERS — BETWEEN INTERIOR GIRDERS

AT TYPE I or II GIRDERS

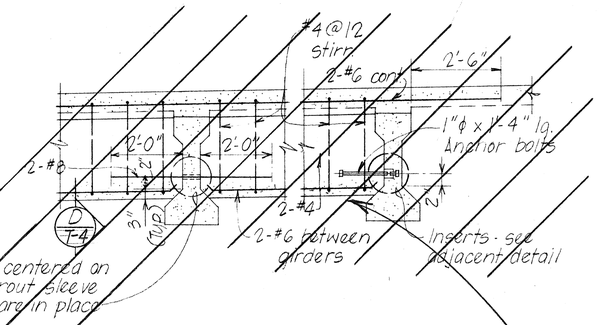

BETWEEN INTERIOR GIRDERS — AT NON-CONT. END

AT TYPE I or II GIRDERS

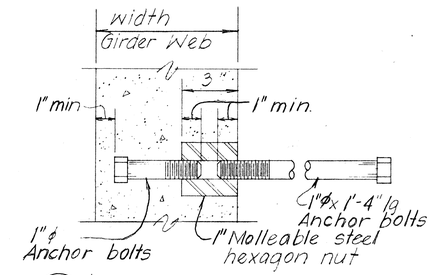

E T-4 INSERT DETAIL

Scale: 3"=1'-0"

Note: Anchor bolts & inserts incidental to concrete and will not be paid for separately.

NOT APPLICABLE

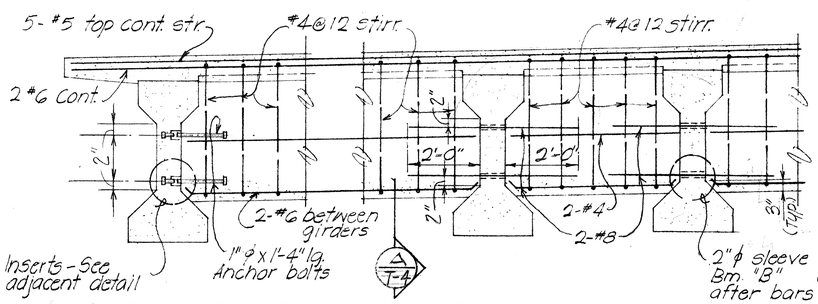

AT EXTERIOR GIRDERS — BETWEEN INTERIOR GIRDERS

AT TYPE III or IV GIRDERS

TYPICAL BEAM "B" DETAIL Scale: 1/2"=1'-0"

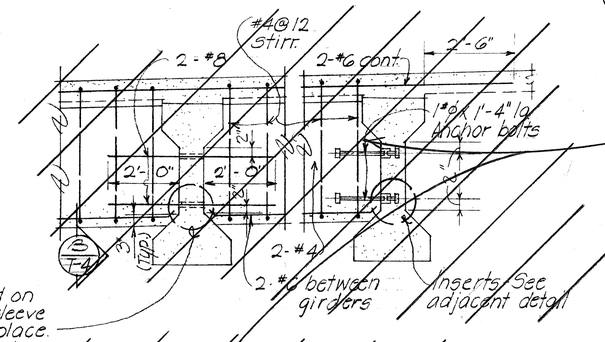

BETWEEN INTERIOR GIRDERS — AT NON-CONT. ENDS

AT TYPE III or IV GIRDERS

TYPICAL BEAM "Ba" DETAIL Scale: 1/2"=1'-0"

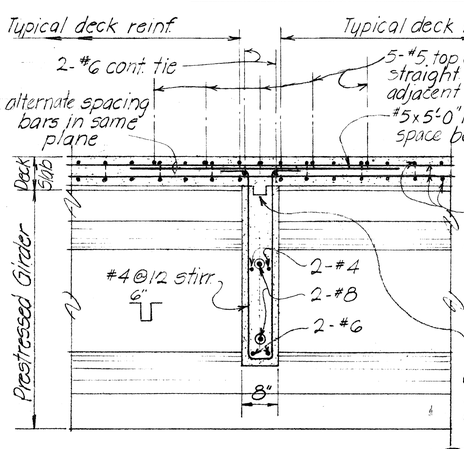

TYPICAL SECTION A T-4

Scale: 3/4"=1'-0"

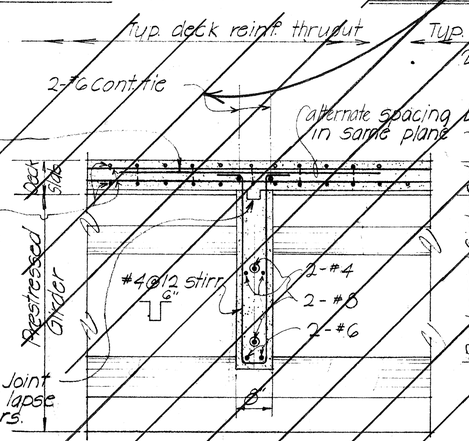

SECTION E T-4

Scale: 3/4"=1'-0"

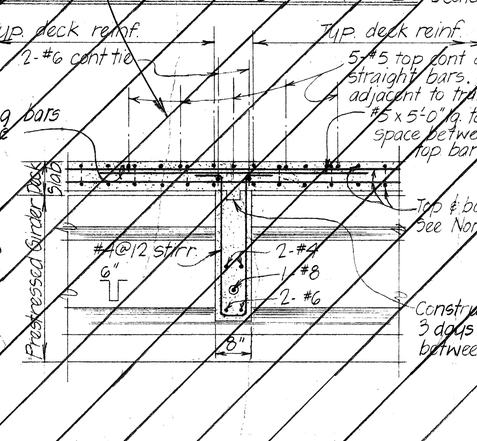

TYPICAL SECTION C T-4

Scale: 3/4"=1'-0"

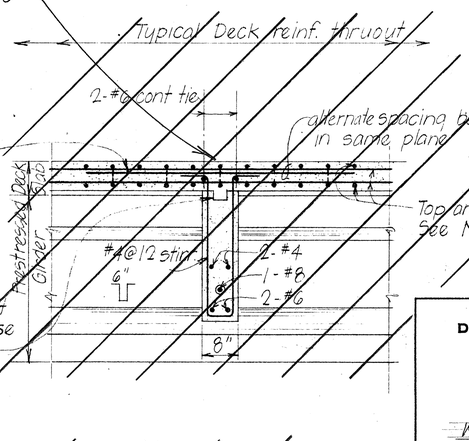

SECTION D T-4

Scale: 3/4"=1'-0"

ORIGINAL PLAN	SURVEY PLOTTED BY	DATE
	DRAWN BY	
	TRACED BY	
	DESIGNED BY	
NOTE BOOK	QUANTITIES BY	
No.	CHECKED BY	

STATE OF HAWAII
DEPARTMENT OF TRANSPORTATION
HIGHWAYS DIVISION

TYPICAL DETAILS
BEAM "B", "Ba"
WAIPUNAHOE STREAM BRIDGE

Project No. 240A-02-71 April 1970

SHEET No. T-4 OF 4 SHEETS

22

K+E CRYSTALENE® LA 2920 TRACING PAPER

FED. ROAD DIST. NO.	STATE	PROJ. NO.	FISCAL YEAR	SHEET NO.	TOTAL SHEETS
HAWAII	HAW.	240A-02-11	1972	23	29

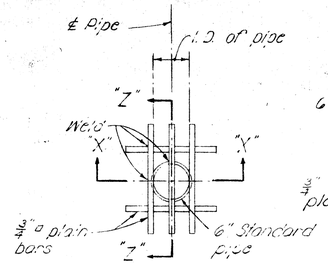

PLAN

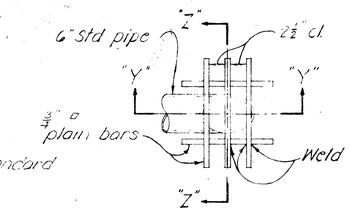

PLAN

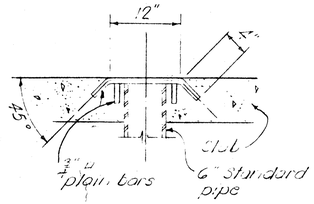

SECTION "Z-Z"

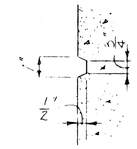

TYPICAL CONCRETE GROOVE DETAIL

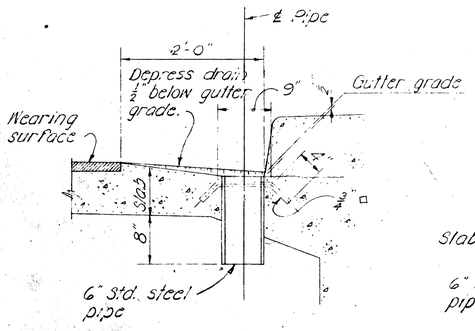

SECTION "X-X"

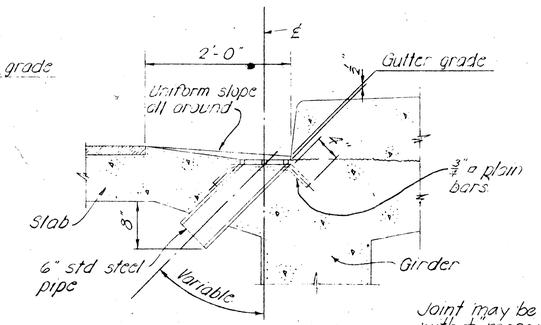

SECTION "Y-Y"

DRIP DETAIL

NOTE:

Metal drains shall be considered incidental to Class A Concrete in both concrete and steel bridges and will not be paid for separately.
Assemblage of grillage and pipe shall be hot-dip galvanized after all welding is completed.

TYPICAL DRAINAGE DETAILS

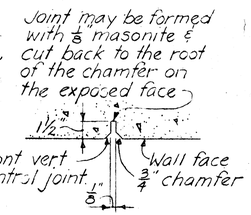

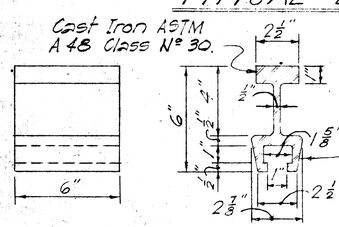

INSERT DETAIL

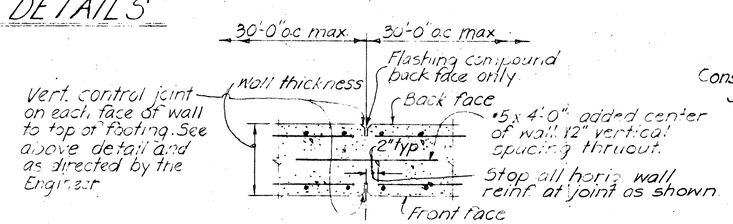

CONTROL JOINT DETAILS

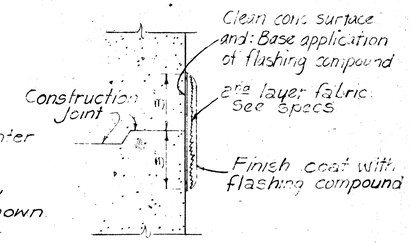

TYP. FLASHING COMPOUND WATERPROOFING DETAIL

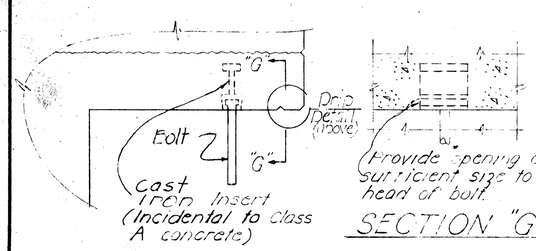

SECTION "G-G"

DETAIL of PIPE HANGERS & INSERTS

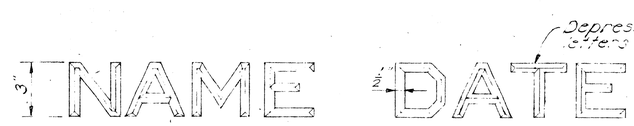

NOTE: Refer to corresponding detail drawings for placement of such names & dates at end post.
Exact details & spacing of letters & figures shall be as directed by the Engineer. See Note #12

TYPICAL DETAIL OF LETTERS & FIGURES AT CONCRETE END POST

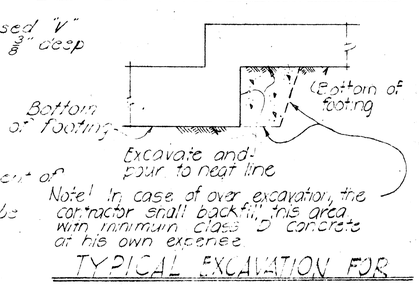

Note: In case of over excavation, the contractor shall backfill this area with minimum Class "B" concrete at his own expense.

TYPICAL EXCAVATION FOR CONTINUOUS FOOTING STEP-UP

GENERAL NOTES

1 - All concrete shall be Class A unless otherwise noted.
2 - Reinforcing shall be detailed in accordance with A.C.I. Manual of Standard Practice for Detailing Reinforced Concrete Highway Structures unless otherwise noted.
3 - Clearance for reinforcing bars shall be as follows, unless otherwise noted:
  a - 1½" For stirrups of beams & pier caps.
  b - 2" For ties of columns.
  c - 2" For formed walls.
  d - 3" For footings.
4 - Minimum spacing between parallel bars shall be 2½ times the diameter of bars, but in no case shall the clear distance between the bars be less than 1½ times the maximum size of the coarse aggregate.
5 - All dimensions relating to reinforcing are to centers of bars unless otherwise noted.
6 - Reinforcing bars shall be securely tied at all intersections & lap splices & shall be held in place during pouring to maintain their proper locations as shown on plans.
7 - Vertical column bars shall be arranged in such a manner as to miss pier cap bars above as directed by the Engineer.
8 - Except as otherwise noted on drawings, all exterior corners & re-entrant angles in concrete work shall be chamfered ¾"x ¾".
9 - Concrete seats receiving steel plates, leadplates or neoprene pads shall be poured monolithically with supporting structures & top of concrete seats shall be finished with a steel trowel to a smooth level surface at the elevation shown on the plans.
10 - Elastomeric Pads: Bottom of bridge bearing pads shall be secured against displacement with adhesives approved by the Engineer. Pads shall be incidental to concrete and will not be paid for separately.
11 - Forms for all exposed surfaces of separation structures and surfaces of retaining walls visible from a traveled way or from a populated area shall be plywood except that metal forms may permitted provided a surface finish satisfactory to the Engineer can be obtained and the use of such forms is approved in writing by the Engineer. Forms for round columns shall be made of materials that will give a smooth finish and true dimensions as given in the plans. Forms for prestressed concrete members shall be either metal or plywood.
12 - Gothic letters and figures approximating dimensions shown will be acceptable if approved by the Engineer.
13 - The contractor shall verify the location of all existing utility lines and notify the respective owners before commencing work of excavation or driving of piles.
14 - Standard Detail Drawings refer to all structures in general, except for modifications as may be required for special conditions. For such modifications refer to the corresponding detailed drawings.

APPROVAL RECOMMENDED: Paul T. Yamashita — BRIDGE DESIGN ENGINEER — DATE 1-23-70

APPROVED: For Paul T. Yamashita — ASSISTANT CHIEF, ENGINEERING — DATE 1-28-70

NO.	REVISION	APPROVED BY	DATE

STATE OF HAWAII
DEPARTMENT OF TRANSPORTATION
HIGHWAYS DIVISION

STANDARD DETAILS

NOTES AND MISCELLANEOUS DETAILS

Date: October 1969

SHEET No. 1 OF 1 SHEETS DB-100

ORIGINAL PLAN	SURVEY PLOTTED BY / DRAWN BY / TRACED BY / DESIGNED BY / QUANTITIES BY / CHECKED BY	DATE
NOTE BOOK No.		

PRINTED ON NO. 1000H CLEARPRINT

FED. ROAD DIST. NO.	STATE	PROJ. NO.	FISCAL YEAR	SHEET NO.	TOTAL SHEETS
HAWAII	HAW.	~~240A-02-71~~	1972	24	29

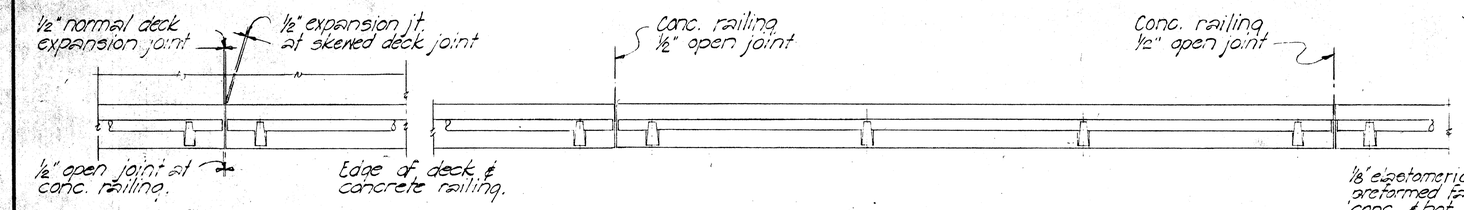

AT DECK EXPANSION JOINT

INTERMEDIATE

RAILING PLAN SCALE 3/8" = 1'-0"

* * Note !!

1. The contractor shall layout the railing to provide 3 cont. panels whenever possible. 2 or 4 cont. panels will be permitted to complete the layout when 3 cont. panels cannot be made. Single panels will not be permitted.
2. Rail Posts shall be normal to grade.
3. Provide double posts at each expansion jt., fixed bridge jt., continuous support, and as shown on detailed drawing.

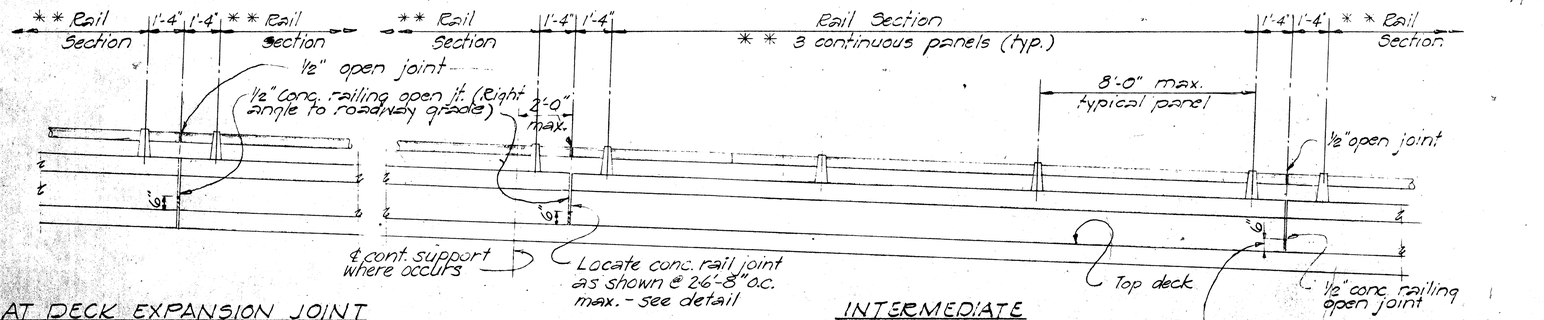

AT DECK EXPANSION JOINT

INTERMEDIATE

EXTERIOR RAILING ELEVATION SCALE: 3/16" = 1'-0"

Provide 6" x 1/2" cont. premoulded filler between each open joint at base of concrete railing.

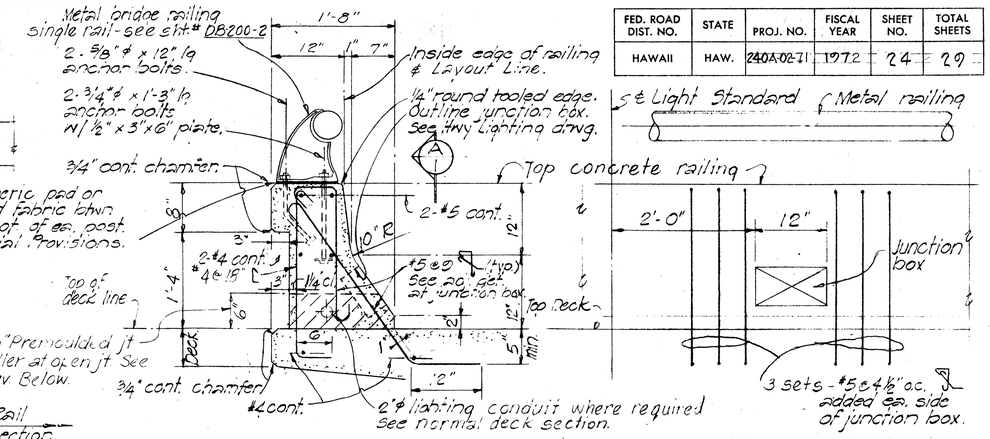

TYPICAL CONCRETE RAILING SECTION

SCALE: 1" = 1'-0"

ELEVATION (A/1) SHOWING SPECIAL REINFORCEMENT AT JUNCTION BOX

SCALE: 1" = 1'-0"

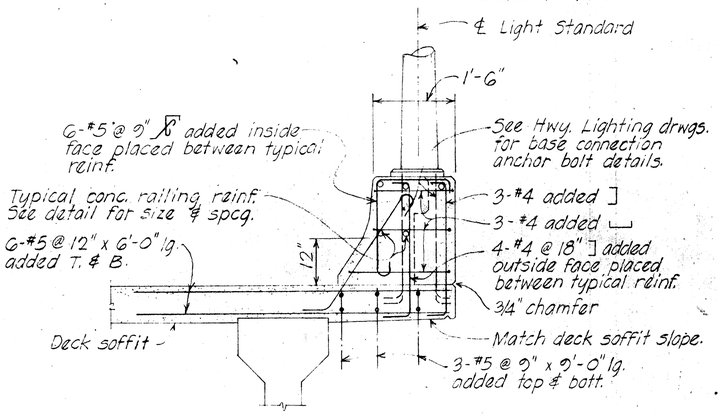

SECTION (C/1)

Scale: 3/4" = 1'-3"

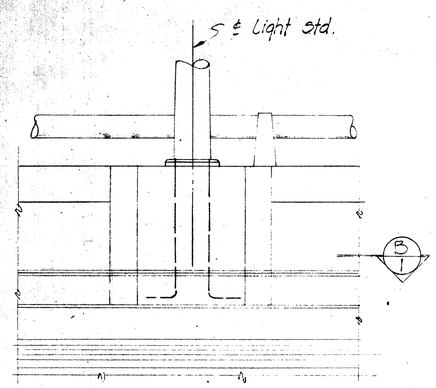

PART ELEVATION

SCALE: 3/4" = 1'-0"

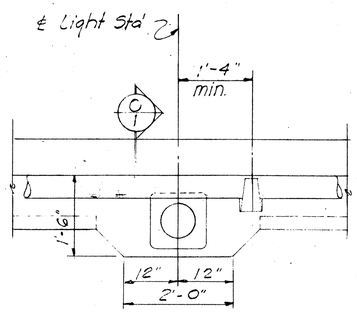

PART PLAN

SCALE: 3/4" = 1'-0"

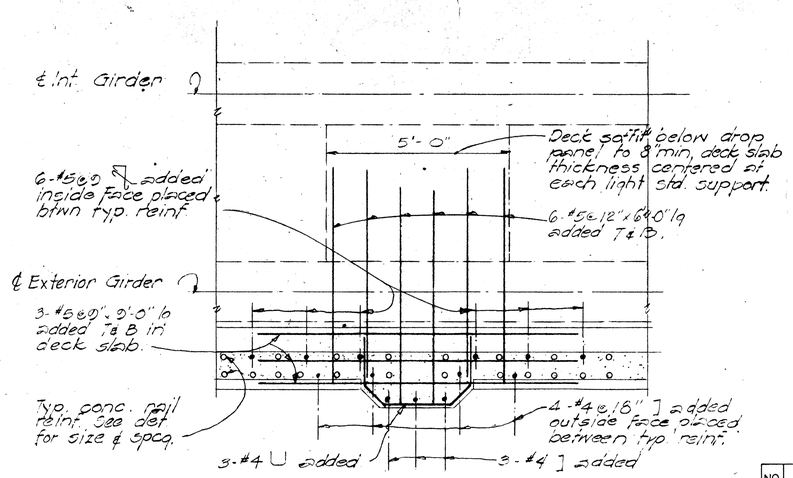

SECTION (B/1)

SCALE: 1/2" = 1'-0"

DETAILS OF RAILING AT LIGHT STANDARD

SCALE AS NOTED

APPROVAL RECOMMENDED:

Paul T. Yamashita — BRIDGE DESIGN ENGINEER — 1-23-70 DATE

APPROVED

Paul T. Yamashita — For ASSISTANT CHIEF, ENGINEERING — 1-28-70 DATE

NO.	REVISION	APPROVED BY	DATE

STATE OF HAWAII
DEPARTMENT OF TRANSPORTATION
HIGHWAYS DIVISION

STANDARD DETAILS
METAL BRIDGE RAILING
ONE RAIL COMBINATION TYPE
ON PARAPET

Date October 1969

SHEET No. 1 OF 2 SHEETS DB-200-1

ORIGINAL PLAN	SURVEY PLOTTED BY	DATE
	TRACED BY	
	DESIGNED BY	
NOTE BOOK	QUANTITIES BY	
No.	CHECKED BY	

PRINTED ON NO 1000H / LEARPRINT

FED. ROAD DIST. NO.	STATE	PROJ. NO.	FISCAL YEAR	SHEET NO.	TOTAL SHEETS
HAWAII	HAW.	240A(2-7)	1972	25	29

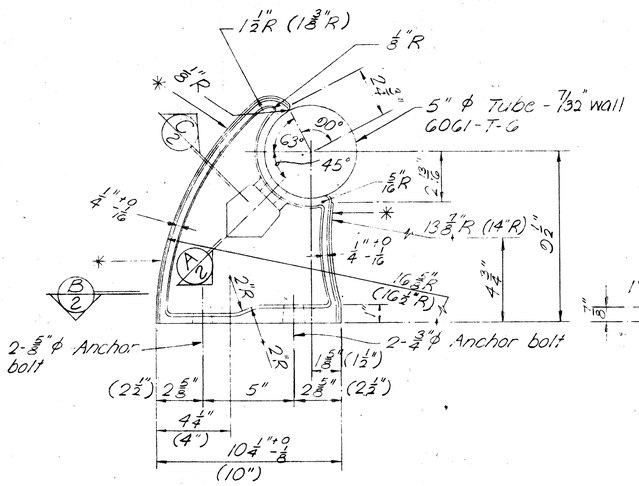

SIDE ELEVATION

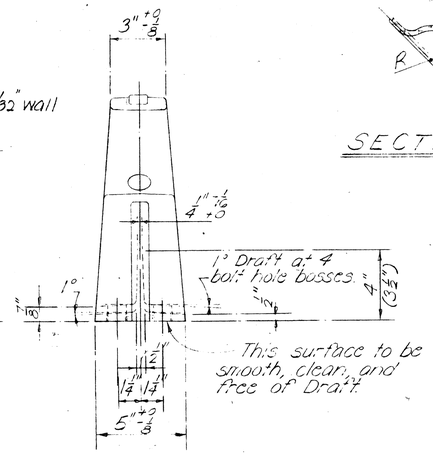

END ELEVATION

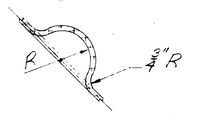

SECTION C/2

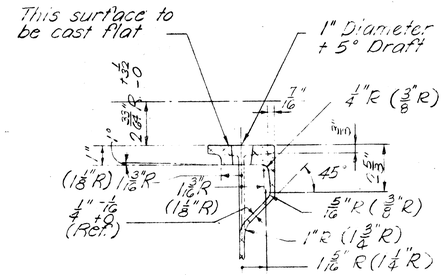

SECTION A/2

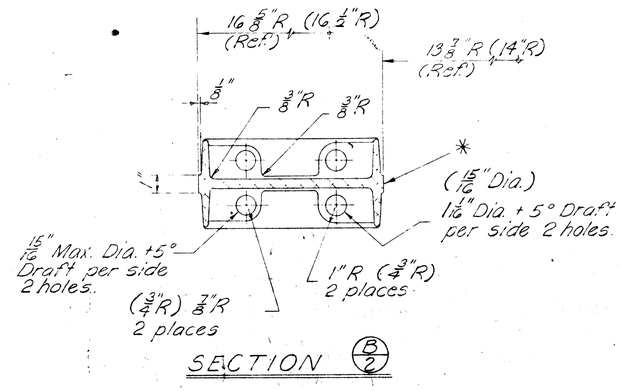

SECTION B/2

NOTE:

TOGGLE BOLT

Cadmium plating on steel - Type NS 0.0005" thick ASTM - A 165. (all parts).

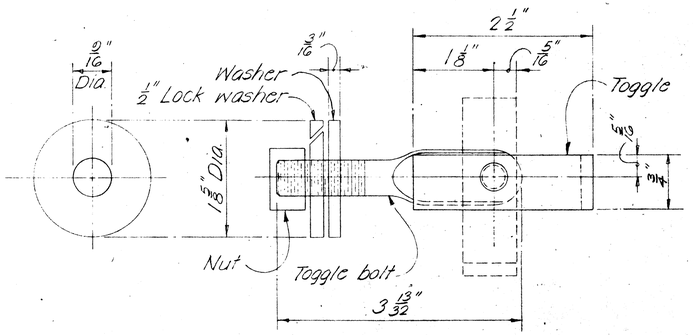

WASHER

SIDE ELEVATION ASSEMBLAGE

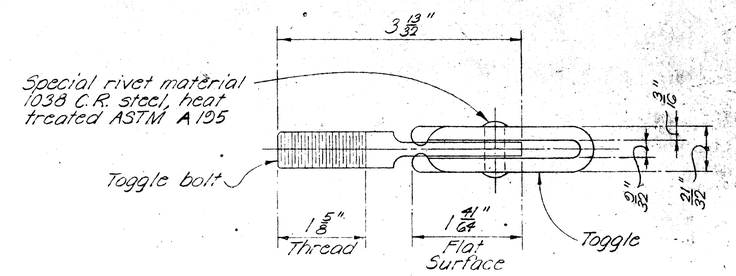

TOP PLAN

1/2" φ STEEL TOGGLE BOLT DETAILS

Full Scale

NOTE:

* Casting to be supplied with a standard scratch brush finish on entire gating rib surface and as indicated by an asterisk (*). Finish shall be approved by the Engineer.

Casting to be neatly trimmed and any protruding flash to be broken off. Unless otherwise specified, draft angles to be 3°, corner radii to be 3/32" R, fillet radii to be 3/8" R, casting tol. to be ±1/16", wall thickness to be ±1/32".

Dimensions may be as shown or as shown in parenthesis ( ).

TYPICAL RAIL POST DETAILS

Scale: 3" = 1'-0"

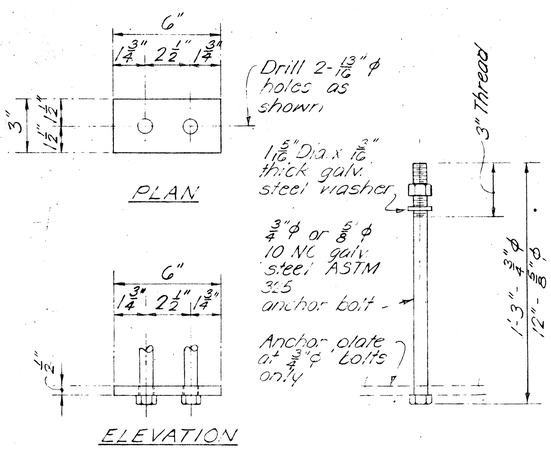

ANCHOR PL DETAIL ANCHOR BOLT

TYPICAL RAIL POST STEEL ANCHOR BOLT ASSEMBLY

Scale: 3" = 1'-0"

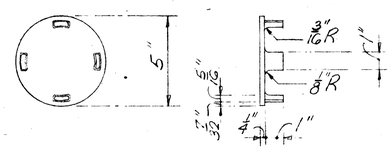

All draft angles = 3°

RAIL CAP DETAIL

Scale: 3" = 1'-0"

GENERAL NOTES:

Metal bridge railing shown is for Aluminum bridge railing. See Specifications for alternate railing in steel.

APPROVAL RECOMMENDED: Paul T. Yamashita — BRIDGE DESIGN ENGINEER — DATE 1-23-70

APPROVED: Paul T. Yamashita — For ASSISTANT CHIEF, ENGINEERING — DATE 1-28-70

NO.	REVISION	APPROVED BY	DATE

STATE OF HAWAII
DEPARTMENT OF TRANSPORTATION
HIGHWAYS DIVISION

STANDARD DETAILS
METAL BRIDGE RAILINGS
ONE RAIL COMBINATION TYPE ON PARAPET

Scale as noted Date:

SHEET No. 2 OF 2 SHEETS DB-200-2

ORIGINAL PLAN	SURVEY PLOTTED BY	DATE
	DRAWN BY	
	TRACED BY	
NOTE BOOK	DESIGNED BY	
	QUANTITIES BY	
No.	CHECKED BY	

PRINTED ON NO. 1000H CLEARPRINT

25
29

FED. ROAD DIST. NO.	STATE	PROJ. NO.	FISCAL YEAR	SHEET NO.	TOTAL SHEETS
HAWAII	HAW.	240A-027T	1972	26	29

CURVE DATA

Δ = 40° 06' 25"
R = 10.0'
Lc = 7.0'

** Dimensions as detailed except as otherwise noted on Detailed Drawings.

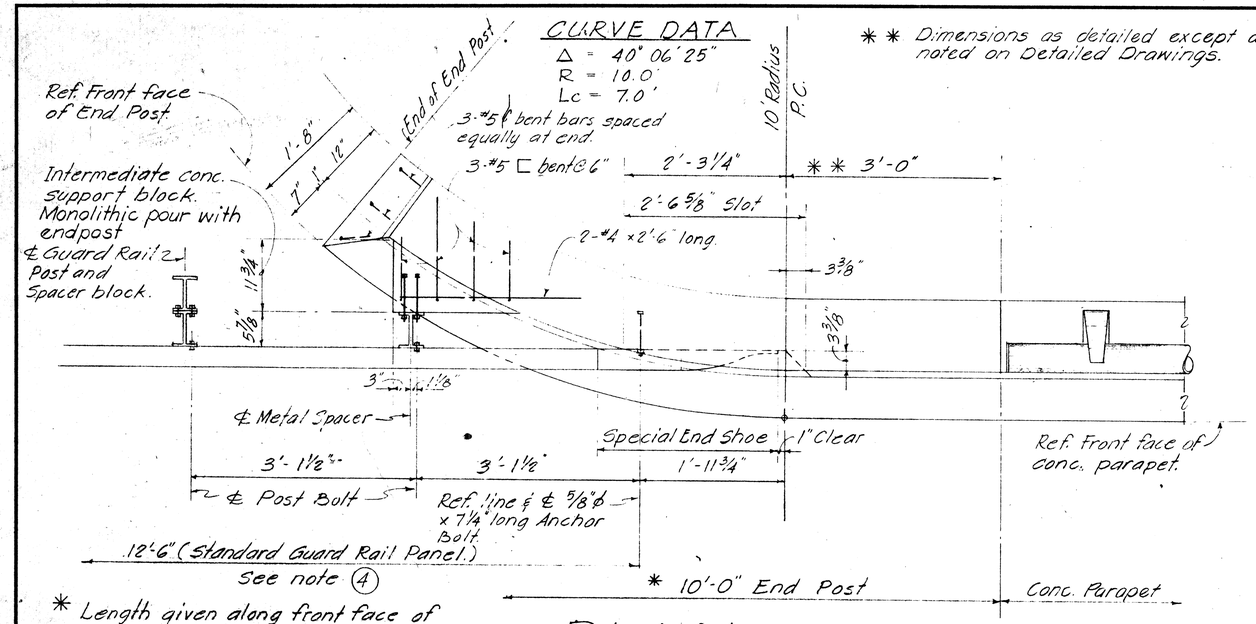

* Length given along front face of parapet and end post.

PLAN Scale: 1" = 1'-0"

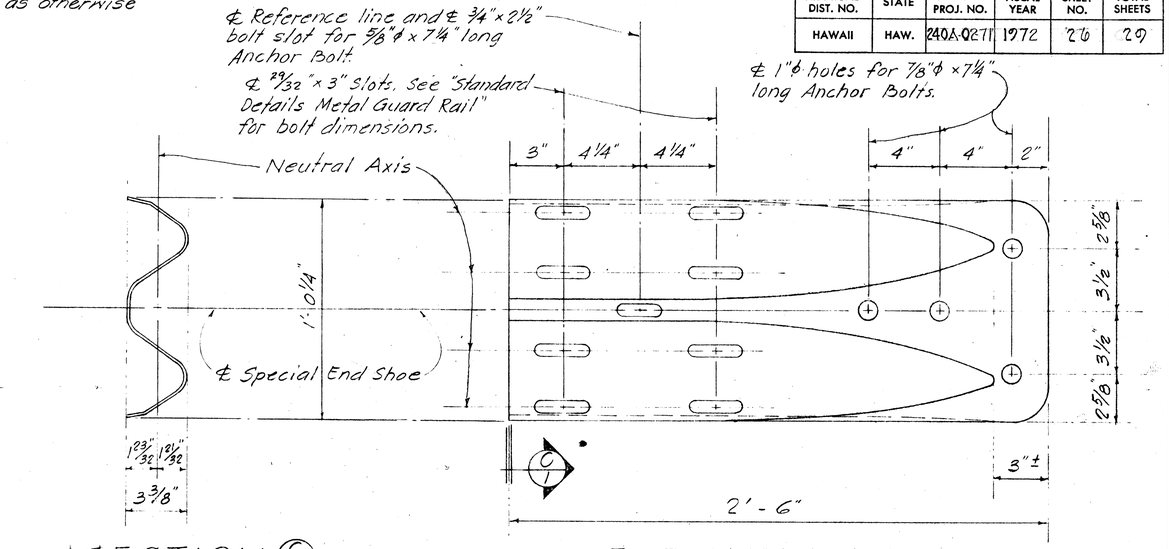

SECTION (C/1) ELEVATION

SPECIAL END SHOE DETAILS

Scale: 3" = 1'-0"

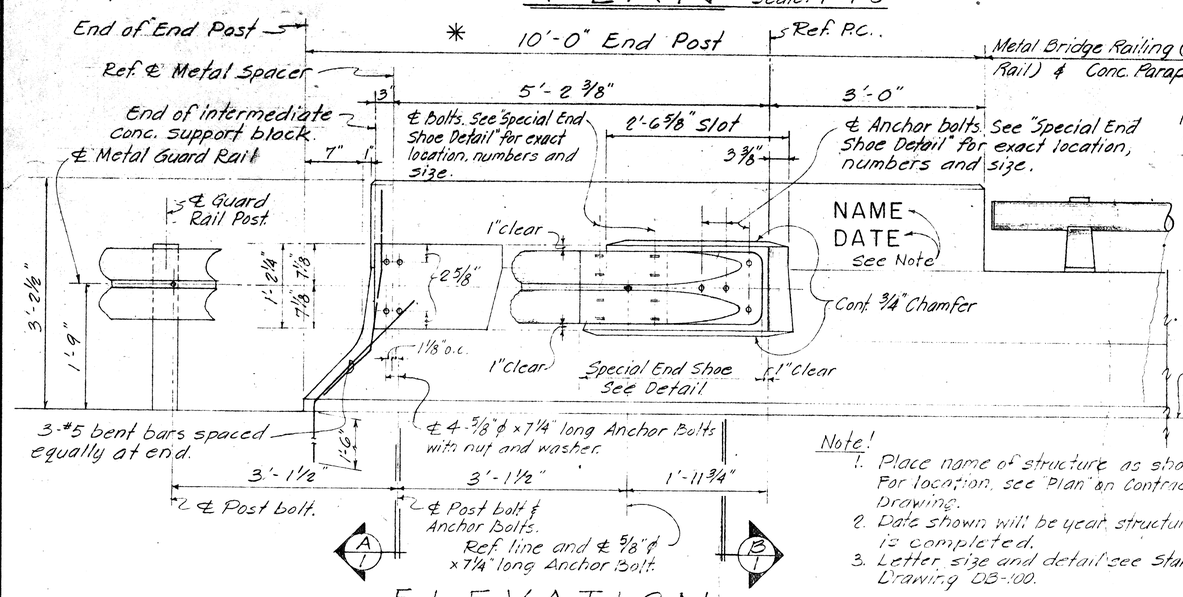

ELEVATION Scale: 1" = 1'-0"

Note!
1. Place name of structure as shown. For location, see "Plan" on Contract Drawing.
2. Date shown will be year structure is completed.
3. Letter size and detail see Standard Drawing DB-100.

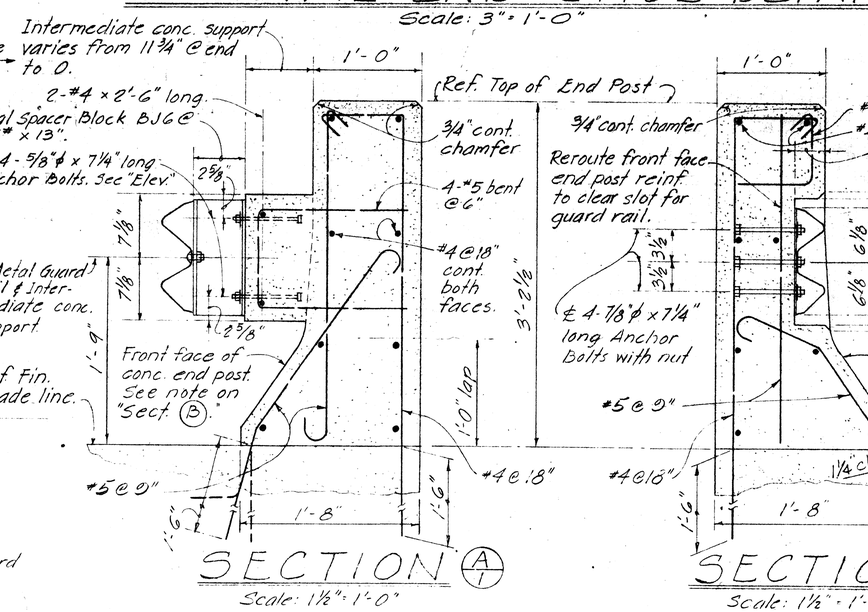

SECTION (A/1)

Scale: 1 1/2" = 1'-0"

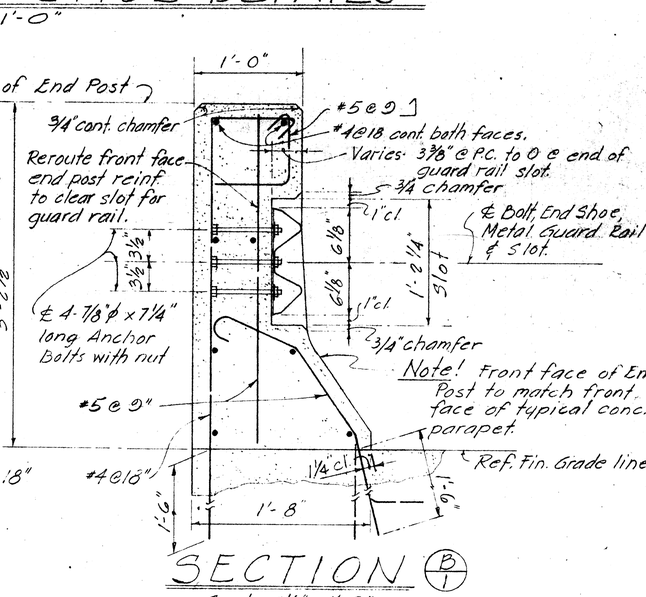

SECTION (B/1)

Scale: 1 1/2" = 1'-0"

NOTES:

1. All Anchor Bolts shall be High Strength bolts conforming to the requirements of ASTM A325.
2. All Shoe assembly, including anchor bolts, nuts and washers, shall be galvanized.
3. Special End Shoe shall be fabricated from 10 gage steel conforming to the requirements of AASHO 180.
4. First Guard Rail Panel adjoining "Special End Shoe" shall be of galvanized steel. See Specifications for requirements.
5. Anchor Bolt length given from under bolt head.

NO.	REVISION	APPROVED BY	DATE

APPROVAL RECOMMENDED: Paul T. Yamashita — BRIDGE DESIGN ENGINEER — DATE 1-23-70

APPROVED: Paul T. Yamashita — For ASSISTANT CHIEF, ENGINEERING — DATE 1-28-70

STATE OF HAWAII
DEPARTMENT OF TRANSPORTATION
HIGHWAYS DIVISION

STANDARD DETAILS
METAL GUARD RAIL CONNECTION
ONE RAIL COMBINATION TYPE END POST

Date

SHEET No. / OF / SHEETS DB-205

ORIGINAL PLAN | SURVEY PLOTTED BY | DRAWN BY | TRACED BY | DESIGNED BY | QUANTITIES BY | CHECKED BY | DATE | NOTE BOOK | No.

K+E CRYSTALENE® LA 2020 TRACING PAPER