REGION	STATE	PROJECT	SHEET NO.	TOTAL SHEETS
	HI	HI A-AD 6(7)	S5	S16

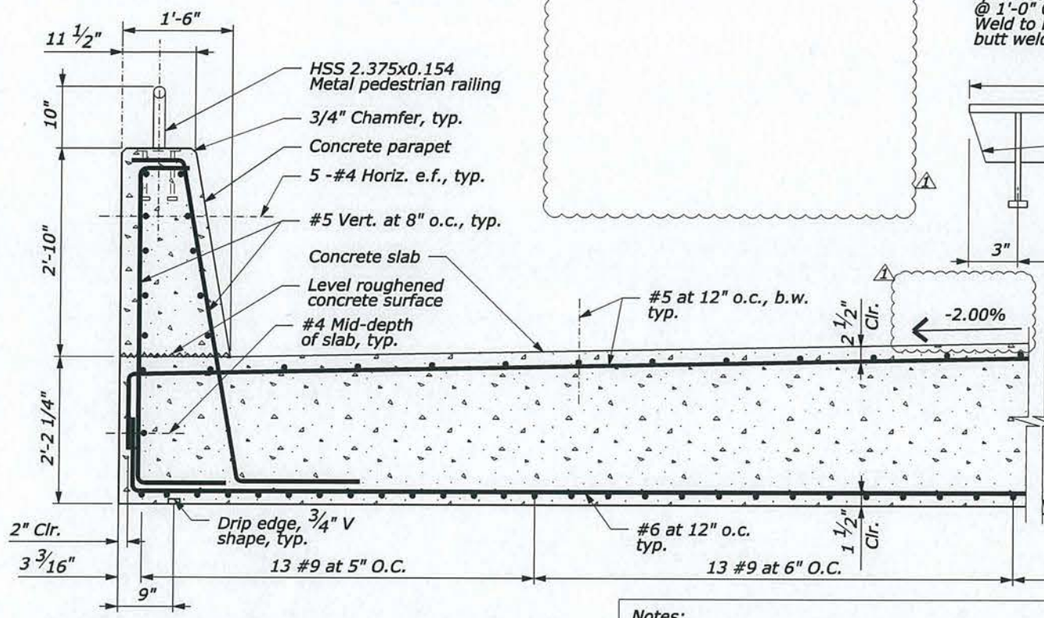

DETAIL - A CONCRETE SLAB SECTION

Notes:

1. Bent plate shall conform to ASTM A36.
2. Headed studs shall conform to AASHTO M169
3. Bent plate assembly shall be hot dipped galvanized after fabrication

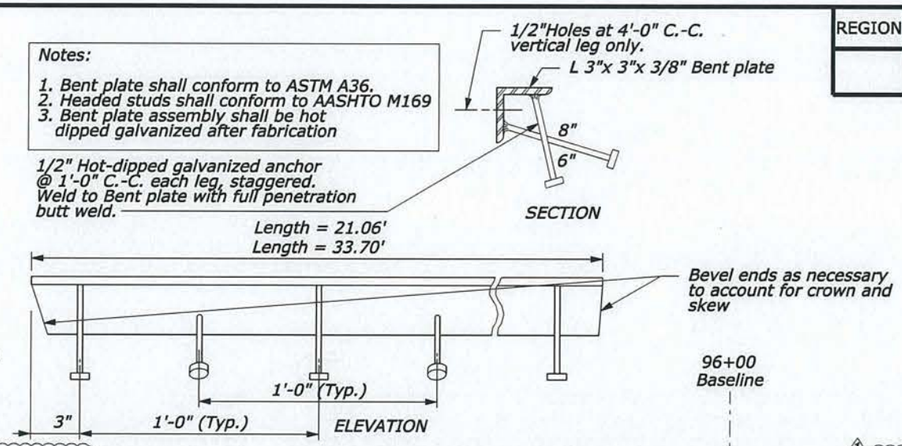

DETAIL - D BENT PLATE GUARD DETAIL

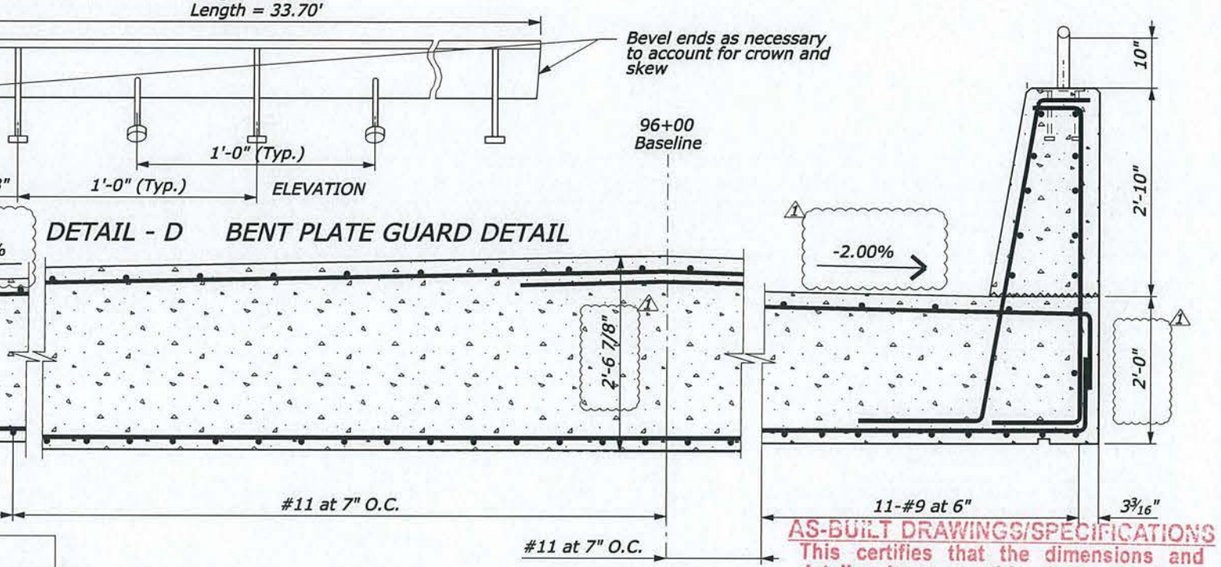

Notes:

1. Section is shown normal to Saddle Rd. Baseline.
2. Section is shown facing downstation.

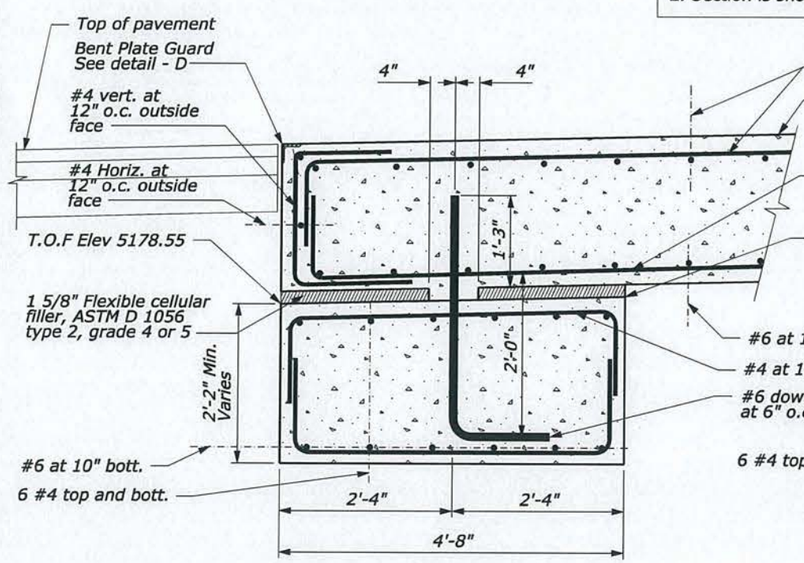

DETAIL - B BEAM SEAT SECTION

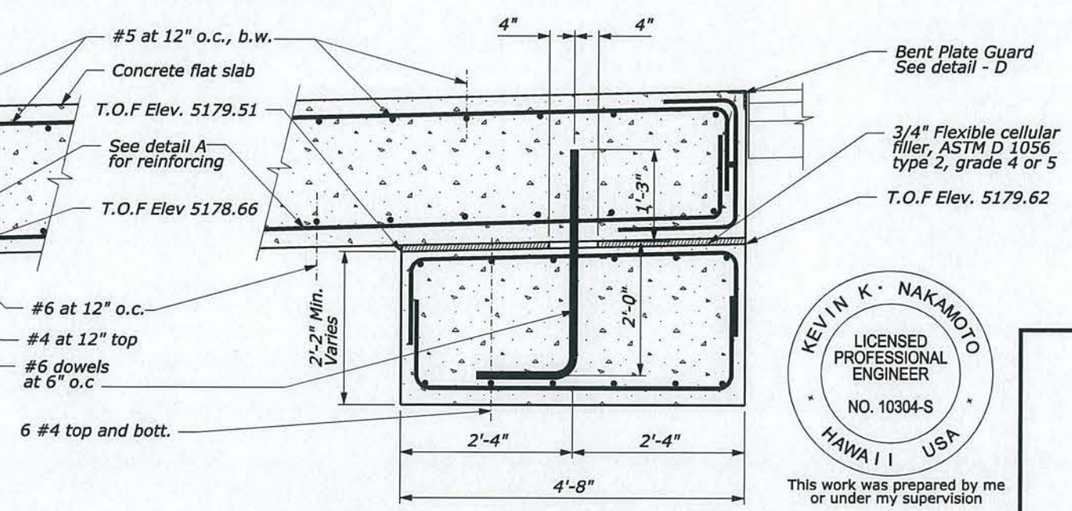

DETAIL - C BEAM SEAT SECTION

AS-BUILT DRAWINGS/SPECIFICATIONS
This certifies that the dimensions and details shown on this sheet reflect the dimensions and details and specifications as constructed in the field.
GOODFELLOW BROS., INC.
Contractor's Name:
Signature
1/2/14
Date

0 2' 4'
Scale in Feet

KEVIN K. NAKAMOTO
LICENSED PROFESSIONAL ENGINEER
NO. 10304-S
HAWAII USA

This work was prepared by me or under my supervision

Expiration Date License 4/30/2014

U.S. DEPARTMENT OF TRANSPORTATION
FEDERAL HIGHWAY ADMINISTRATION
CENTRAL FEDERAL LANDS HIGHWAY DIVISION

UNDERPASS SECTIONS AND DETAILS

APPROVED FOR CONSTRUCTION

NO.	DATE	BY	REVISIONS	NO.	DATE	BY	REVISIONS	DESIGNED BY	DRAWN BY	CHECKED BY	SCALE	PROJECT TEAM LEADER	BRIDGE DRAWING	DATE	DRAWING NO.
1	4/23/2013	NS	PCD-1 - REVISED SUPERELEVATION TRANSITION					R. GARCIA	N. SARIO	B. HAYASHI	AS SHOWN		5 of 16	March 2013	