REGION	STATE	PROJECT	SHEET NO.	TOTAL SHEETS
	HI	HI A-AD 6(7)	S8	S16

Notes:

1. Posts shall be vertical
2. Tension rods shall conform to ASTM A 36
3. Tension wires shall conform to ASTM A 817
4. Pipe shall conform to ASTM A 53, Type E or S, Grade B.

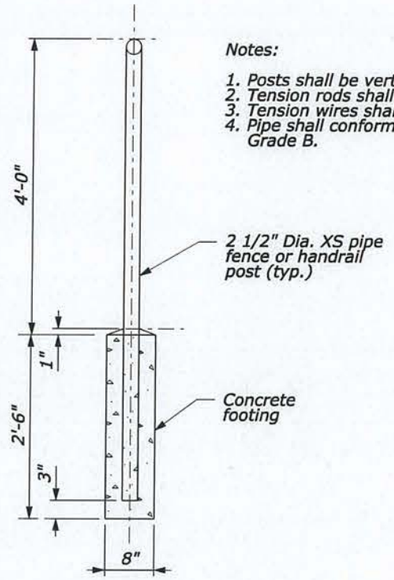

TYPICAL POST DETAIL

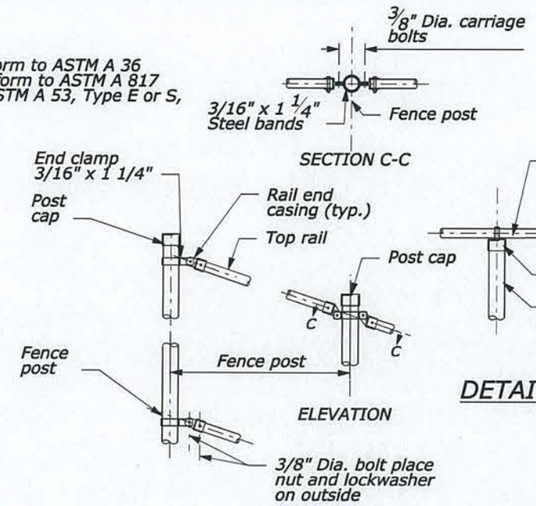

DETAIL A

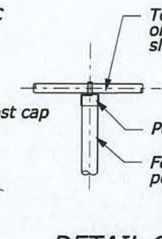

DETAIL C

DETAIL B

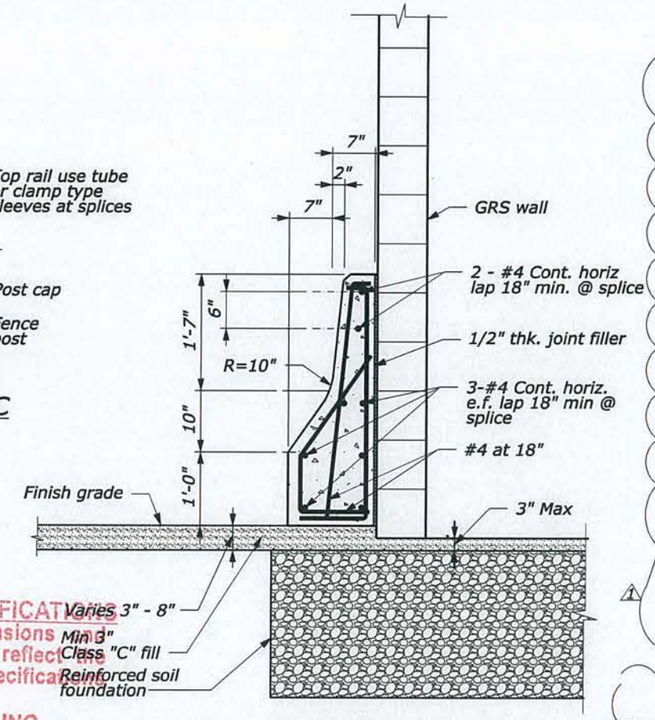

CONCRETE BARRIER SECTION

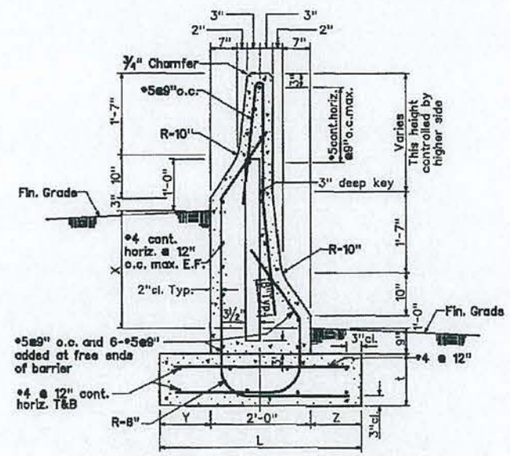

TYPE	DIFFERENCE IN FIN. GRADE X	FOOTING Y	Z	L	t
4C	1'-0"min., 2'-4"max.	2'-0"	1'-9"	5'-9"	1'-6"

TYPE 4C

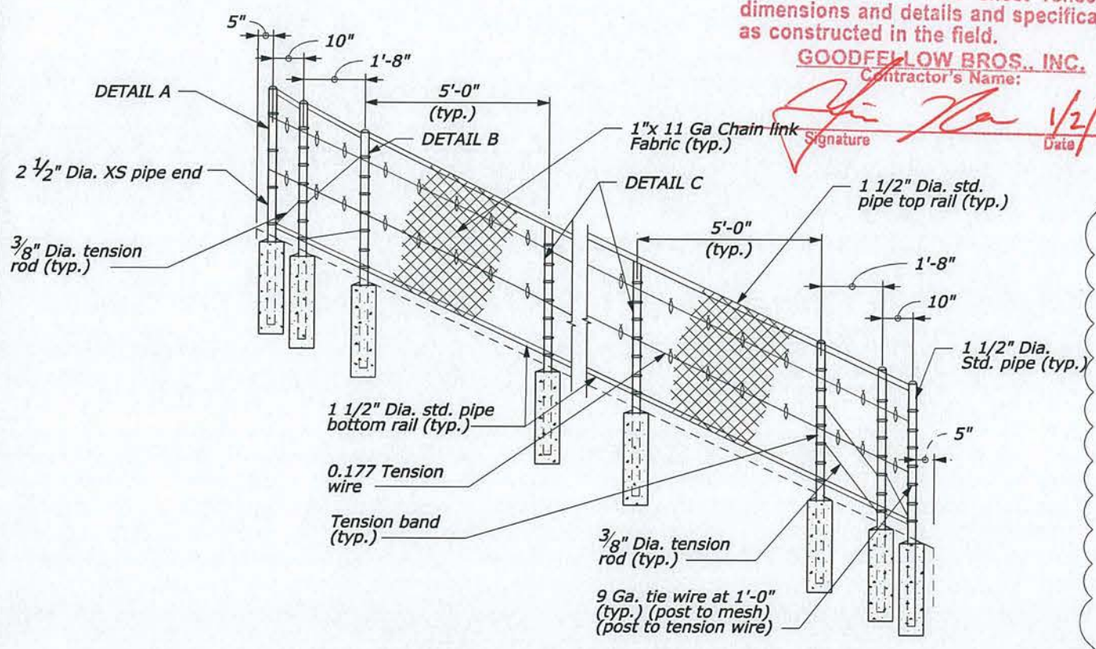

TYPICAL CHAIN LINK FENCE AT WINGWALL

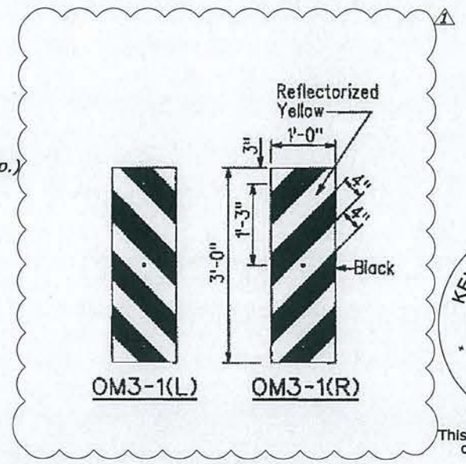

TYPE III OBJECT MARKER DETAIL

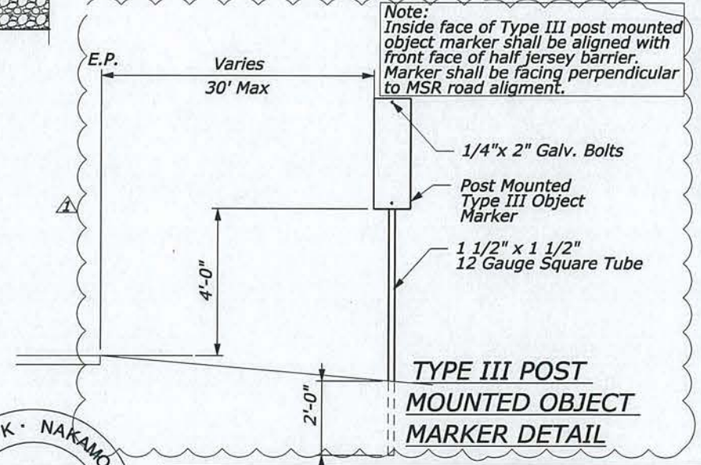

TYPE III POST MOUNTED OBJECT MARKER DETAIL

AS-BUILT DRAWINGS/SPECIFICATIONS
This certifies that the dimensions details shown on this sheet reflect the dimensions and details and specifications as constructed in the field.
GOODFELLOW BROS., INC.
Contractor's Name:
Signature
1/2/14
Date

KEVIN K. NAKAMOTO
LICENSED PROFESSIONAL ENGINEER
NO. 10304-S
HAWAII USA

This work was prepared by me or under my supervision

Expiration Date License 4/30/2014

U.S. DEPARTMENT OF TRANSPORTATION
FEDERAL HIGHWAY ADMINISTRATION
CENTRAL FEDERAL LANDS HIGHWAY DIVISION

BRIDGE RAILING ELEVATION SECTION AND DETAILS

APPROVED FOR CONSTRUCTION

NO.	DATE	BY	REVISIONS	NO.	DATE	BY	REVISIONS
1	4/23/2013	NS	PCD-1 - ADDED CONCRETE BARRIER AND TYPE III OBJECT MARKER DETAIL				

DESIGNED BY	DRAWN BY	CHECKED BY	SCALE	PROJECT TEAM LEADER	BRIDGE DRAWING	DATE	DRAWING NO.
R. GARCIA	N. SARIO	B. HAYASHI	AS SHOWN		8 of 16	March 2013	-