STATE	PROJECT	SHEET NO.	TOTAL SHEETS
HI	HI A-AD 6(7)	T8	T101

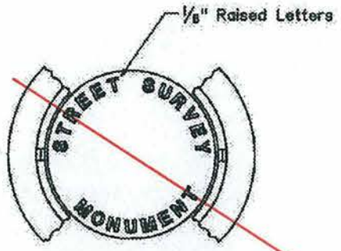

TOP VIEW OF COVER AND PORTION OF FRAME

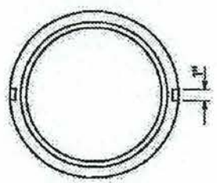

BOTTOM OF COVER

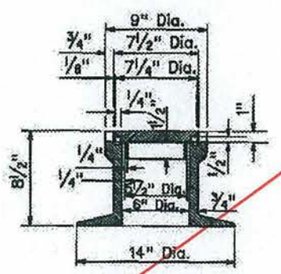

SECTIONAL VIEW OF FRAME AND COVER

STREET SURVEY MONUMENT CASTING

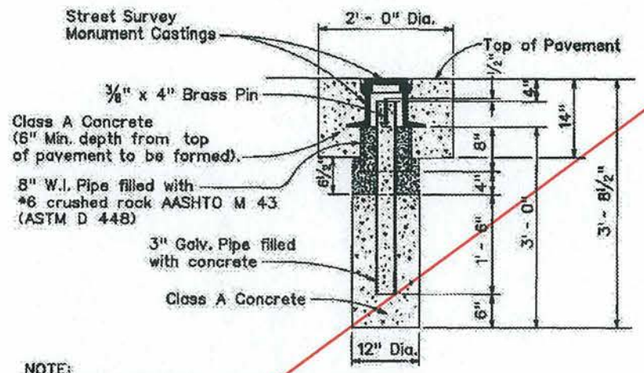

NOTE:
Where the excavation extends into solid rock the depth may be decreased if approved by the Engineer.

STREET SURVEY MONUMENT

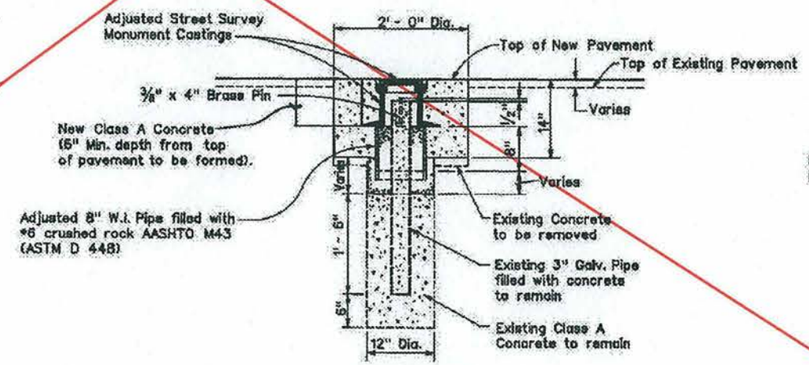

DETAIL FOR RECONSTRUCTED SURVEY MONUMENT

Note:
Drawings are not to scale.

* Followed DPW standard Detail R-14
* for all ROW Monuments.

AS-BUILT DRAWINGS/SPECIFICATIONS
This certifies that the dimensions and details shown on this sheet reflect the dimensions and details and specifications as constructed in the field.
GOODFELLOW BROS., INC.
Contractor's Name:
Signature 1/2/14
Date

DANIEL A. LIDDLE
LICENSED PROFESSIONAL ENGINEER
No. 13949-C
HAWAII U.S.A.

This work was prepared by me or under my supervision
Daniel A. Liddle
Expiration Date of License 4/30/2014

DATE	REVISION	APP'D.
x	x	

STATE OF HAWAII
DEPARTMENT OF TRANSPORTATION
HIGHWAYS DIVISION
STANDARD PLAN D-08
STREET SURVEY MONUMENT

STANDARD PLAN D-08 05/31/07

U.S. DEPARTMENT OF TRANSPORTATION
FEDERAL HIGHWAY ADMINISTRATION
CENTRAL FEDERAL LANDS HIGHWAY DIVISION

U.S. CUSTOMARY SPECIAL

(HDOT STD D-08)
RIGHT-OF-WAY
SURVEY MONUMENT

SPECIAL
621-A

3/21/2012 2:40:35 PM S:\Tranproj\100013746-SR\HwyDes\Rdwy\Sheets_Bid_Package_2\T-600\HI SR 200(00)_esp621-A.dgn