REG	STATE	PROJECT	SHEET NO.	TOTAL SHEETS
9	HI	HI-A-AD-6(2) Saddle Road	L1	L19

METAL ROUND PIPE CULVERT
FILL HEIGHT AND METAL THICKNESS TABLE
HELICAL LOCKSEAM AND WELDED SEAM PIPE CULVERT

STEEL — MAXIMUM FILL HEIGHT ABOVE TOP OF PIPE IN FEET

PIPE SIZE DIAMETER INCHES	MINIMUM COVER INCHES	2"x ½" CORRUGATIONS 0.064/16	0.079/14	0.109/12	0.138/10	0.168/8	3"x 1" CORRUGATIONS 0.064/16	0.079/14	0.109/12	0.138/10	0.168/8	5"x 1" CORRUGATIONS 0.064/16	0.079/14	0.109/12	0.138/10	0.168/8
12	12	100	100													
15	12	100	100													
18	12	100	100	100												
24	12	100	100	100												
30	12	85	100	100												
36	12	71	88	100	100		81	100	100							
42	12	60	76	100	100	100	69	87	100							
48	12	53	66	93	100	100	61	76	100			54	68	95		
54	18		59	82	100	100	54	67	95	100	100	48	60	84	100	100
60	18			74	95	100	48	61	85	100	100	43	54	76	98	100
66	18				87	100	44	55	78	100	100	39	49	69	89	100
72	18				79	97	40	50	71	92	100	36	45	63	81	100
78	18					86	37	47	66	85	100	33	41	58	75	92
84	18					75	34	43	61	78	96	31	38	54	70	85
90	18						32	40	57	73	90	29	36	50	65	80
96	18							38	53	69	84		34	47	61	75
102	18							35	50	65	79		32	44	57	70
108	18								47	61	75			42	54	66
114	18								45	58	71			40	51	63
120	18								42	55	67			38	49	60
126	18									52	64				46	57
132	18									50	61				44	50
138	18									48	58				42	50
144	18										56					50

ALUMINUM — MAXIMUM FILL HEIGHT ABOVE TOP OF PIPE IN FEET

MINIMUM COVER INCHES	2 2/3"x ½" CORRUGATIONS 0.060/16	0.075/14	0.105/12	0.135/10	3"x 1" CORRUGATIONS 0.060/16	0.075/14	0.105/12	0.135/10
~~12~~	~~100~~	~~100~~						
~~12~~	~~100~~	~~100~~						
~~12~~	~~100~~	~~100~~						
12	~~77~~	~~96~~	79	99				
12		~~77~~	63	82	~~71~~	~~89~~	~~100~~	
12		~~64~~	53	68	~~59~~	~~74~~	~~100~~	~~100~~
12			45	58	~~50~~	~~63~~	~~89~~	~~100~~
12			39	51	~~44~~	~~55~~	34	52
18			~~54~~	41	~~39~~	~~49~~	31	46
18				33		~~44~~	27	41
18						~~40~~	25	37
18						~~37~~	23	34
24						~~34~~	21	32
24							20	29
24							18	27
24							17	26
24								24
24								23
24								
24								

METAL PIPE ARCH CULVERT
FILL HEIGHT AND METAL THICKNESS TABLE
HELICAL LOCKSEAM AND WELDED SEAM PIPE ARCH CULVERT

STEEL — MAXIMUM FILL HEIGHT ABOVE TOP OF PIPE IN FEET

PIPE ARCH SIZE SPAN X RISE INCHES	CORNER RADIUS INCHES	MINIMUM COVER INCHES	2"x ½" CORRUGATIONS 0.064/16	0.079/14	0.109/12	0.138/10	0.168/8	3"x 1" CORRUGATIONS 0.079/14	0.109/12	0.138/10	0.168/8	5"x 1" CORRUGATIONS 0.079/14	0.109/12	0.138/10	0.168/8
17 x 13	3½	12	13												
21 x 15	4⅛	12	12												
24 x 18	4⅞	12	13												
28 x 20	5½	12	13												
35 x 24	6⅞	12	12												
42 x 29	8¼	12	12												
49 x 33	9⅝	12		12											
57 x 38	11	12			12										
64 x 43	12⅜	12			12										
71 x 47	13¾	12				12									
77 x 52	15⅛	12					12								
83 x 57	16½	12					12								

---															
60 x 46	18¾	12							21				21		
66 x 51	20¾	12							21				21		
73 x 55	22⅞	12							20				20		
81 x 59	20⅞	12						17	--			17	--		
87 x 63	22⅝	12						17	--			17	--		
95 x 67	24⅜	12						17	--			17	--		
103 x 71	26⅛	18							17			17	-		
112 x 75	27¾	18							16				16		
117 x 79	29½	18							16				16		
128 x 83	31¼	24								16				16	
137 x 87	33	24								16				16	
142 x 91	34¾	24									16				16

ALUMINUM — MAXIMUM FILL HEIGHT ABOVE TOP OF PIPE IN FEET

MINIMUM COVER INCHES	2 2/3"x ½" CORRUGATIONS 0.060/16	0.075/14	0.105/12	0.135/10	3"x 1" CORRUGATIONS 0.060/16	0.075/14	0.105/12	0.135/10
12	13							
12	12							
12	13							
12		13						
12		12						
15			5					
15			5					
15				5				
18				6				
18								
--								
--								
--								
--								
15					21			
18					21			
18						20		
21							17	
21							17	
24							17	
24								17
27								
27								

NOTES:

1. When directed, camber pipe culverts upward from a chord through the inlet and outlet inverts an ordinate amount equal to 1% of the pipe length. Develop camber on a parabolic curve. If the midpoint elevation on the parabolic curve as designed exceeds the elevation of the inlet invert, reduce the amount of camber or increase the pipe culvert gradient.
2. Fill heights exceeding 100 feet require special analysis by the Government.
3. The fill heights in the table are for helical lockseam and welded seam pipe only. Fill heights for culvert pipe with annular corrugations are more restrictive than those of helical lockseam and welded seam pipe. Obtain approval before furnishing annular corrugated pipe.
4. Measure minimum cover from the top of the pipe culvert to the future finish grade. Measure maximum fill height from the top of the pipe to the top of the future finish grade
5. Culvert types/sizes shown on sheets are acceptable for use.
6. Steel pipe will not be allowed for this project.
7. The pH of the soil, backfill and effluent shall be within range of 5.5 and 9.0 inclusive, and resistivity shall be not less than 500 ohm-centimeters.

NOTE: STEEL PIPE REFERENCES DELETED

U.S DEPARTMENT OF TRANSPORTATION
FEDERAL HIGHWAY ADMINISTRATION
CENTRAL FEDERAL LANDS HIGHWAY DIVISION

SPECIAL DETAIL C602-1

METAL PIPE CULVERT

Scale: N.T.S. Date: October 15, 2004

SHEET No. 1 OF 1

L1

M:/Mproj/Lennie/203027/100%/sheets/sht1001.dgn

REG	STATE	PROJECT	SHEET NO.	TOTAL SHEETS
9	HI	HI-A-AD-6(2) Saddle Road	L2	L19

COUPLING BANDS FOR METAL PIPE CULVERT 1/

CORRUGATION SIZE 2/	PIPE DIAMETER	PIPE-ARCH SPAN X RISE	MINIMUM BAND WIDTH: ANNULAR 3/ CORRUGATED BANDS	HELICALLY 4/ CORRUGATED BANDS	SEMI- 5/ CORRUGATED BANDS
INCHES	INCHES	INCHES	INCHES	INCHES	INCHES
1½ by ¼	underdrain 6/	-	7	7	10½
2⅔ by ½	12 to 36	17x13 to 42x29	7	12	10½
	42 to 72	49x33 to 83x57	10½	12	10½
	78 to 84	-	10½	12	10½
3 by 1	36 to 72	42x29 to 81x59	12	14	10½
	78 to 144	87x63 to 142x91	12	14	10½
5 by 1	48 to 72	57x38 to 81x59	20	22	10½
	78 to 144	87x63 to 142x91	20	22	10½

1/ Fabricate annular, helical and semi-corrugated type coupling bands from the same metal as the connecting pipe. Provide coupling bands not more than 3 nominal sheet thicknesses thinner than the thickness of the pipe to be connected, and no thinner than 0.052 inch (18 gage) for steel or 0.048 inch (18 gage) for aluminum. Fasten coupling bands with the following sizes of bolt:

⅜" diameter - 18" (21"x15" pipe arch) or less

½" diameter - 21" (24"x18" pipe arch) or more

2/ For helically corrugated pipe with rerolled ends, the nominal corrugation size refers to the dimension of the end corrugation in the pipe.

3/ Use annular corrugated bands with pipes having annular corrugations or with helical pipe having rerolled ends to form annular corrugations. A 10½ inch band is acceptable on pipe ends rerolled with 2 2/3 by ½ inch corrugations. A 12 inch band is acceptable on pipe ends rerolled with 3 by 1 inch pipe corrugations.

4/ Use helical corrugated bands with pipes having helically corrugated ends.

5/ The minimum band widths shown for 3 by 1 and 5 by 1 inch corrugated sizes apply to 2 2/3 by ½ corrugations on rerolled pipe ends.

6/ Smooth sleeve-type couplers and flat bands may be used for pipe diameters of 12 inches or less. Use a matching metal having a nominal thickness of not less than 0.040 inch (20 gage) for steel, or 0.036 inch (20 gage) for aluminum, or a plastic with an equivalent strength to metal.

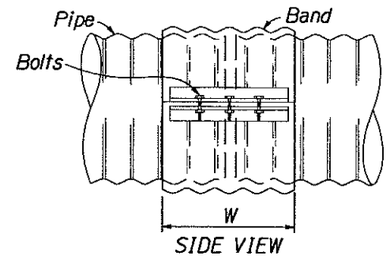

Rivet, Spotweld, or Fillet weld at crest of corrugation at heel and toe of angle.

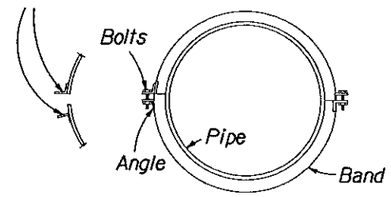

END VIEW

Note:
Second angle connection optional to 42" diameter, required above 42" diameter.

ANNULAR BAND

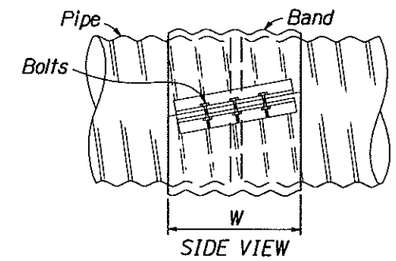

Rivet, Spotweld, or Fillet weld at crest of corrugation at heel and toe of angle.

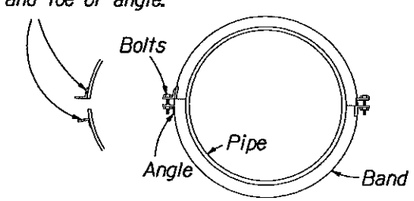

END VIEW

Note:
Second angle connection optional to 42" diameter, required above 42" diameter.

HELICAL BAND

NOTE:

1. Watertight pipe joints are not required unless specified in the Special Contract Requirements.
2. Other types of coupling bands or fastening devices that comply with the joint performance criteria of AASHTO Standard specifications for Highway Bridges, Division ** Section 26 may be used.

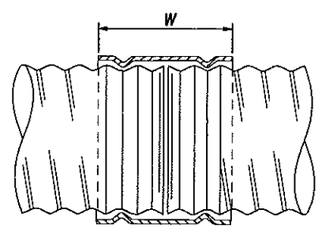

Continuous corrugation around band meshes with second annular corrugation in pipe end.

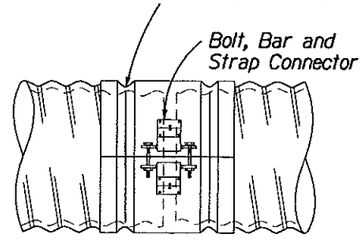

SEMI-CORRUGATED BAND

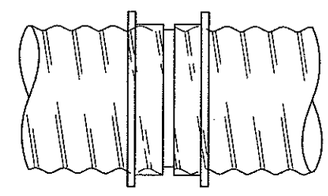

SLEEVE JOINT

Smoother sleeve with center stop. Stab type joint.

SMOOTH SLEEVE BAND

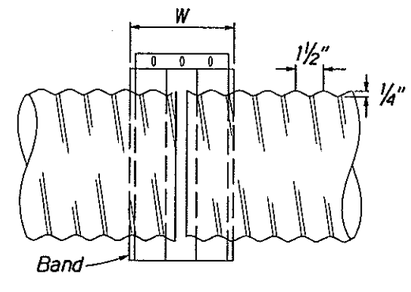

CROSS SECTION THRU PIPE JOINTS

FLAT BAND

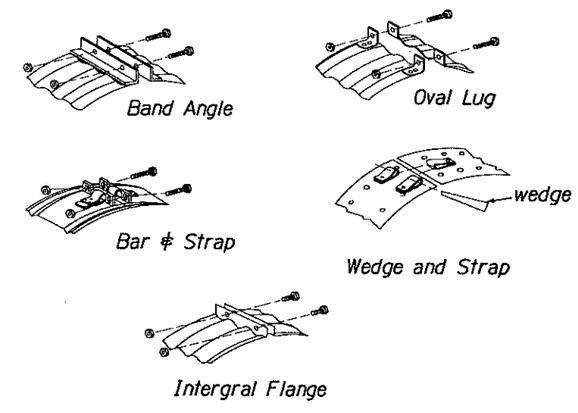

STANDARD BAND CONNECTIONS

U.S DEPARTMENT OF TRANSPORTATION
FEDERAL HIGHWAY ADMINISTRATION
CENTRAL FEDERAL LANDS HIGHWAY DIVISION

SPECIAL DETAIL C602-2

METAL PIPE CULVERT COUPLING BAND

Scale: N.T.S. Date: October 15, 2004

SHEET No. 1 OF 1

L2

M:/Mproj/Lennie/203027/100%/sheets/sht002.dgn

REG	STATE	PROJECT	SHEET NO.	TOTAL SHEETS
9	HI	HI-A-AD-6(2) Saddle Road	L3	L19

POLYETHYLENE (PE) PLASTIC ROUND PIPE CULVERT

FILL HEIGHT TABLE AND MINIMUM CELL CLASSIFICATION NUMBER PER ASTM D 3350

SMOOTH WALL, CORRUGATED AND RIBBED PIPE CULVERT

PIPE SIZE DIAMETER INCHES	MINIMUM COVER INCHES	SMOOTH WALL (SOLID WALL) CELL CLASSIFICATION NUMBER 335434C MINIMUM WALL THICKNESS IN INCHES 0.607	0.857	0.923	1.154	1.385	1.292	1.477
		MAXIMUM FILL HEIGHT IN FEET						
~~12~~	~~12~~	~~57~~						
18	12		52					
24	12			38				
30	12				38			
36	12					38		
42	12						27	
48	12							27

PIPE SIZE DIAMETER INCHES	MINIMUM COVER INCHES	CORRUGATED CELL CLASS. NO. 315412C MAX. FILL HEIGHT IN FT.	CELL CLASS. NO. 324420C MAX. FILL HEIGHT IN FT.
~~12~~	~~12~~	~~11~~	~~10~~
~~15~~	~~12~~	~~11~~	~~10~~
18	12	12	10
24	12	12	10
30	12	12	10
36	12	11	10

PIPE SIZE DIAMETER INCHES	MINIMUM COVER INCHES	RIBBED CELL CLASS. NO. 334433C MAX. FILL HEIGHT IN FEET	CELL CLASS. NO. 335434C
18	12	18	24
24	12	22	28
30	12	22	28
36	12	25	31
42	12	21	27
48	12	21	26

~~POLYVINYL CHLORIDE (PVC) PLASTIC ROUND PIPE CULVERT~~

~~FILL HEIGHT TABLE AND MINIMUM CELL CLASSIFICATION NUMBER PER ASTM D 1784~~

~~SMOOTH WALL AND RIBBED PIPE CULVERT~~

~~SMOOTH WALL (SOLID WALL)~~

PIPE SIZE DIAMETER INCHES	MINIMUM COVER INCHES	CELL CLASS. NO. 12454C MIN. WALL THICKNESS IN INCHES 0.358	0.438	CELL CLASS. NO. 12364C 0.358	0.438
		MAX. FILL HEIGHT IN FEET			
12	12	65		69	
15	12		62		66

~~RIBBED~~

PIPE SIZE DIAMETER INCHES	MINIMUM COVER INCHES	CELL CLASS. NO. 12454C MAX. FILL HEIGHT IN FEET	CELL CLASS. NO. 12364C
12	12	37	26
15	12	32	22
18	12	33	23
24	12	29	21
30	12	28	20
36	12	27	19
42	12	26	18
48	12	24	17

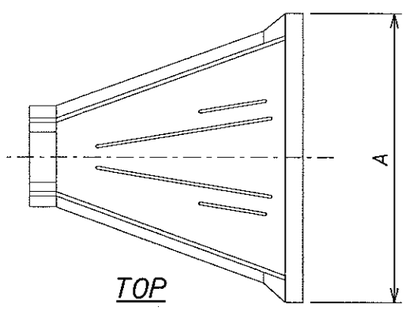

TOP

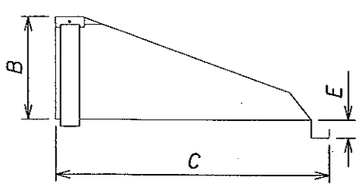

SIDE

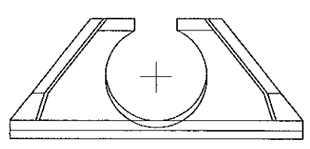

FRONT

PLASTIC PIPE END SECTION

PIPE SIZE DIAMETER	DIMENSIONS A	B	C	E
~~12~~	~~42~~	~~15~~	~~33~~	~~6~~
~~15~~	~~46~~	~~25~~	~~45~~	~~6~~
18	54	29	55	6
24	64	37	65	6
30	88	36	64	6
36	88	43	67	6

NOTES:

1. When directed, camber pipe culverts upward from a chord through the inlet and outlet inverts an ordinate amount equal to 1% of the pipe length. Develop camber on a parabolic curve. If the midpoint elevation on the parabolic curve as designed exceeds the elevation of the inlet invert, reduce the amount of camber or increase the pipe culvert gradient.
2. Measure minimum cover from the top of the pipe culvert to the future finish grade. Measure maximum fill height from the top of the pipe to the future finish grade.
3. Minimum HDPE pipe culvert size is 18 inches and the maximum is 48 inches.

U.S DEPARTMENT OF TRANSPORTATION
FEDERAL HIGHWAY ADMINISTRATION
CENTRAL FEDERAL LANDS HIGHWAY DIVISION

SPECIAL DETAIL C602-5

PLASTIC PIPE CULVERT

Scale: N.T.S. Date: October 15, 2004

SHEET No. 1 OF 1

M:/Mproj/Lennie/203027/100%/sheets/sht1003.dgn

REG	STATE	PROJECT	SHEET NO.	TOTAL SHEETS
9	HI	HI-A-AD-6(2) Saddle Road	L4	L19

END SECTIONS FOR PIPE ARCH CULVERT

PIPE SIZE SPAN X RISE INCHES	MINIMUM METAL THICKNESS STEEL INCH	STEEL GAGE	ALUM. INCH	ALUM. GAGE	DIMENSIONS A INCHES	B INCHES	H INCHES	F INCHES	L INCHES	W INCHES	SLOPE Approx.
17 x 13	.064	16	.060	16	5	9	6	28	20	52	2 1/8
21 x 15	.064	16	.060	16	6	11	6	34	24	58	2
24 x 18	.064	16	.060	16	7	12	6	40	28	63	2 1/8
28 x 20	.064	16	.060	16	7	16	6	46	32	70	2
35 x 24	.079	14	.075	14	9	16	6	58	39	85	1 7/8
42 x 29	.079	14	.075	14	11	18	7	73	46	104	1 7/8
49 x 33	.109	12	.105	12	12	21	9	82	53	117	1 3/4
57 x 38	.109	12	.105	12	16	26	12	88	62	132	1 7/8
53 x 41	.109	12	.105	12	17	26	12	88	63	130	1 3/4
64 x 43	.109	12	.105	12	17	30	12	100	69	144	1 7/8
60 x 46	.109	12	.105	12	17	36	12	100	70	142	1 7/8
71 x 47	.109	12	.105	12	17	36	12	112	77	156	1 7/8
66 x 51	.109	12	.105	12	17	36	12	112	77	156	1 3/4
77 x 52	.109	12	.105	12	17	36	12	124	77	167	1 5/8
73 x 55	.109	12	.105	12	17	36	12	124	77	168	1 1/2
83 x 57	.109	12	.105	12	17	44	12	130	77	177	1 1/2
81 x 59	.109	12	.105	12	17	44	12	136	77	179	1 5/8
87 x 63	.109	12	.105	12	17	44	12	136	77	186	1 1/2
95 x 67	.109	12	.105	12	17	44	12	160	87	210	1 1/2
103 x 71	.109	12	.105	12	17	44	12	172	87	222	1 1/3
112 x 75	.109	12	.105	12	17	44	12	172	87	226	1 1/4

END SECTIONS FOR ROUND PIPE CULVERT

PIPE SIZE DIAMETER INCHES	MINIMUM METAL THICKNESS STEEL INCH	STEEL GAGE	ALUM. INCH	ALUM. GAGE	DIMENSIONS A INCHES	B INCHES	H INCHES	F INCHES	L INCHES	W INCHES	SLOPE Approx.
12	.064	16	.060	16	5	7	6	22	21	44	2 1/4
15	.064	16	.060	16	6	8	6	28	26	52	2 1/4
18	.064	16	.060	16	7	10	6	34	31	58	2 1/8
21	.064	16	.060	16	8	12	6	40	36	66	2 1/8
24	.064	16	.060	16	9	13	6	46	41	72	2 1/8
30	.079	14	.075	14	11	16	8	55	51	88	2 1/8
36	.079	14	.075	14	13	19	9	70	60	105	2
42	.109	12	.105	12	15	25	10	82	69	122	2 1/8
48	.109	12	.105	12	17	29	12	88	78	131	2
54	.109	12	.105	12	17	33	12	100	84	143	2
60	.109	12	.105	12	17	36	12	112	87	157	1 7/8
66	.109	12	.105	12	17	39	12	118	87	162	1 5/8
72	.109	12	.105	12	17	44	12	120	87	169	1 1/2
78	.109	12	.105	12	17	48	12	130	87	178	1 3/8
84	.109	12	.105	12	17	52	12	136	87	184	1 1/3
90	.109	12	.105	12	17	58	12	142	87	188	1 1/4
96	.109	12	.105	12	17	58	12	144	87	197	1 1/8

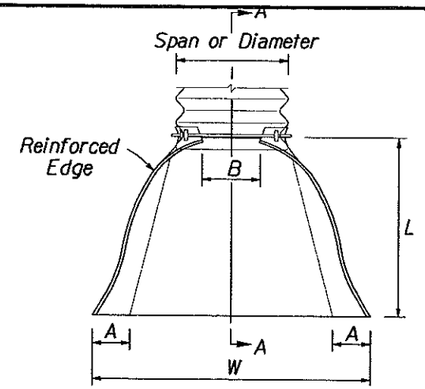

PLAN
(ROUND OR PIPE ARCH)

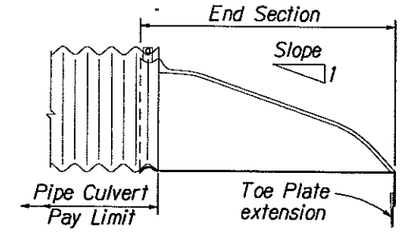

SECTION A-A

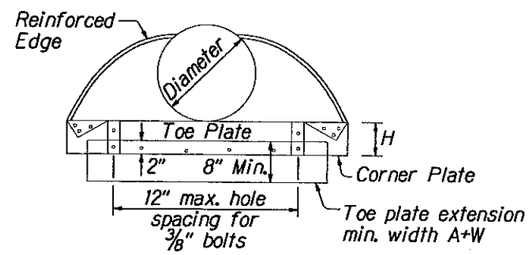

ELEVATION
(ROUND)

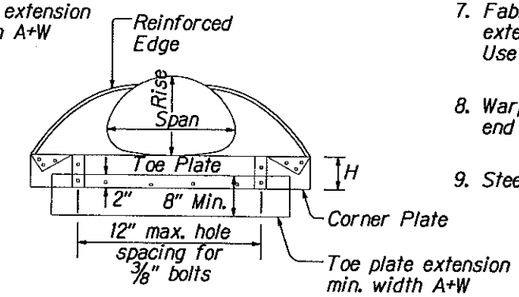

ELEVATION
(PIPE ARCH)

NOTES:

1. Variations in design and dimensions are permitted to allow for manufacturer's standards.
2. Fabricate the diameter of the end section of Design B to match the inside diameter of the concrete pipe culvert.
3. Design C may be used in lieu of Design A for all metal pipe culvert sizes. Coupling bands may be any acceptable type for the pipe culvert specified.
4. Fabricate multiple piece bodies with lap seams tightly joined by 3/8" rivets or bolts. Fabricate end section center panels for 60" and larger diameter pipe and 71" x 47" and larger pipe arch from 0.138" (10 gage) steel or 0.135" (10 gage) aluminum.
5. On end section center panels for 77" x 52", 73" x 55" and larger pipe arch, provide 2 1/2" x 2 1/2" x 1/4" angle reinforcement bolted or riveted under the center panel seam.
6. Supplement the reinforced edges of end sections for 60" and larger diameter pipe and 77" x 52", 73" x 55" and larger pipe arch with 2" x 2" x 1/4" stiffener angles attached with bolts or rivets.
7. Fabricate connector section, corner plate and toe plate extensions from the same metal thickness as the panel body. Use toe plate extension where shown on the plans.
8. Warp embankment slopes to match the slope of the flared end sections.
9. Steel pipe will not be allowed for this project.

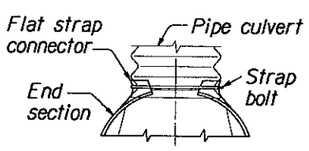

For 12" thru 24" round pipe and 17"x 13" thru 28"x 20" pipe arch

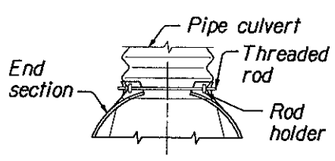

For 30" thru 60" round pipe and 35"x 24" thru 66"x 51" pipe arch

DESIGN A
CONNECTION TO ANNULAR CORRUGATED METAL PIPE

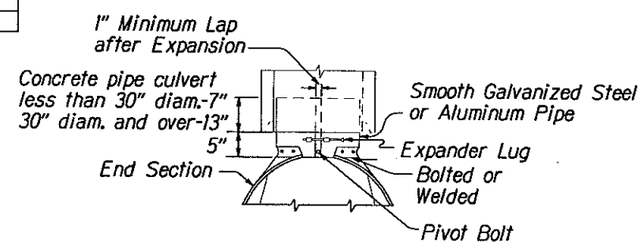

DESIGN B
CONNECTION TO CONCRETE PIPE
INLET END

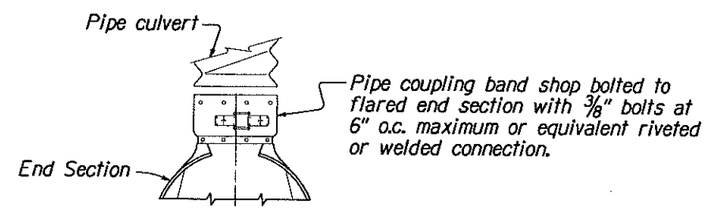

For all sizes of round pipe and pipe arch.

DESIGN C
CONNECTION TO METAL PIPE
OR OUTLET END OF CONCRETE PIPE

U.S. DEPARTMENT OF TRANSPORTATION
FEDERAL HIGHWAY ADMINISTRATION
CENTRAL FEDERAL LANDS HIGHWAY DIVISION

SPECIAL DETAIL C602-4

METAL END SECTIONS

Scale: N.T.S. Date: October 15, 2004

SHEET No. 1 OF 1

M:/Mproj/Lennie/203027/100%/sheets/sht004.dgn

REG	STATE	PROJECT	SHEET NO.	TOTAL SHEETS
9	HI	HI-A-AD-6(2) Saddle Road	L5	L19

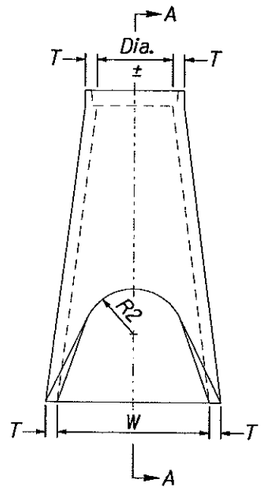

PLAN

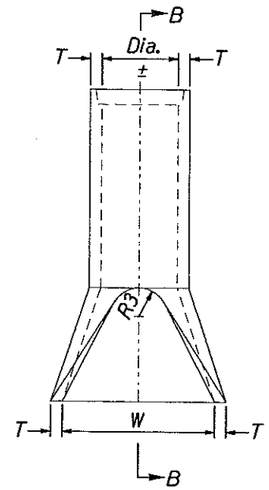

PLAN

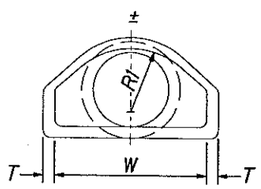

ELEVATION

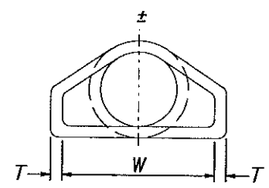

ELEVATION

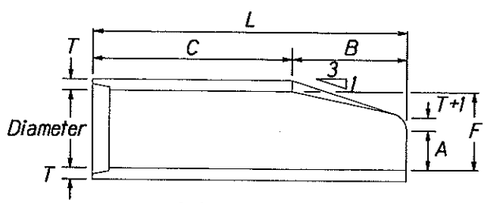

SECTION A-A

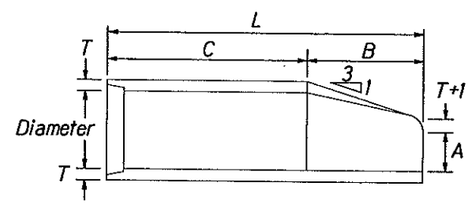

SECTION B-B

NOTES:

1. Variations in design and dimensions are permitted to allow for manufacturer's standards.
2. Fabricate the outlet end section with a groove end and the inlet end section with a tongue end.
3. Warp embankment slopes to match the slope of the flared end section.

END SECTIONS FOR ROUND PIPE CULVERT

PIPE SIZE	DIMENSIONS									
DIAMETER INCHES	T INCHES	A INCHES	B INCHES	C INCHES	L INCHES	W INCHES	F INCHES	R1 INCHES	R2 INCHES	R3 INCHES
12	2	4	24	48 7/8	72 7/8	24	13	10 1/8	9	4
15	2 1/4	6	27	46	73	30	16	12 1/2	11	6
18	2 1/2	9	27	46	73	36	19	15 1/2	12	7 1/2
21	2 3/4	9	36	37	73	42	22	16 1/2	13	5
24	3	9 1/2	43 1/2	30	73 1/2	48	25	16 13/16	14	8
27	3 1/4	10 1/2	48	25 1/2	73 1/2	54	28	--	14 1/2	9
30	3 1/2	12	54	19 3/4	73 3/4	60	31	18 1/2	15	8
33	3 3/4	13 1/2	58 1/2	37 1/2	96	66	34	23 3/4	17 1/2	9
36	4	15	63	33	96	72	37	23 3/16	20	11
42	4 1/2	21	63	33	96	78	43	--	22	11
48	5	24	72	24	96	84	49	--	22	12

U.S DEPARTMENT OF TRANSPORTATION
FEDERAL HIGHWAY ADMINISTRATION
CENTRAL FEDERAL LANDS HIGHWAY DIVISION

SPECIAL DETAIL C602-8

CONCRETE END SECTION FOR ROUND PIPE

Scale: N.T.S. Date: October 15, 2004

SHEET No. 1 OF 1

M:/Mproj/Lennie/203027/100%/sheets/sht1005.dgn

REG	STATE	PROJECT	SHEET NO.	TOTAL SHEETS
9	HI	HI-A-AD-6(2) Saddle Road	L6	L19

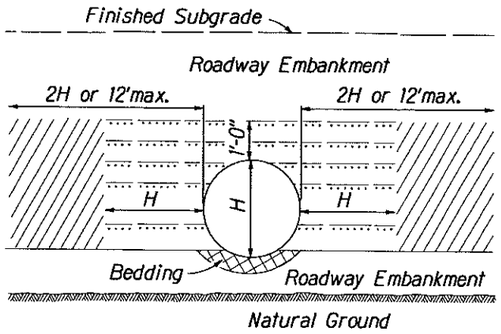

ABOVE NATURAL GROUND

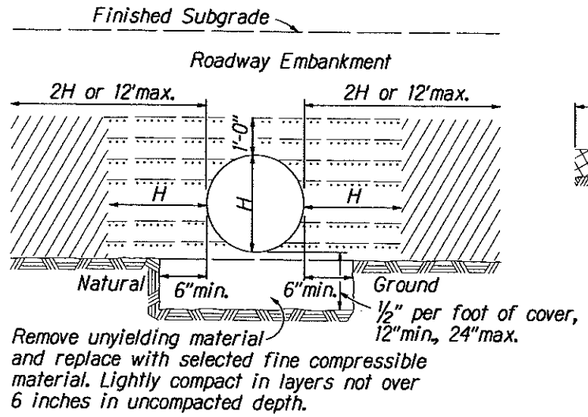

ON UNYIELDING MATERIAL

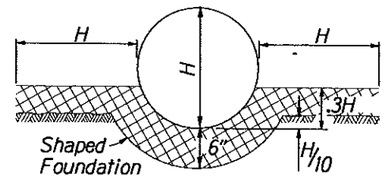

CLASS B BEDDING

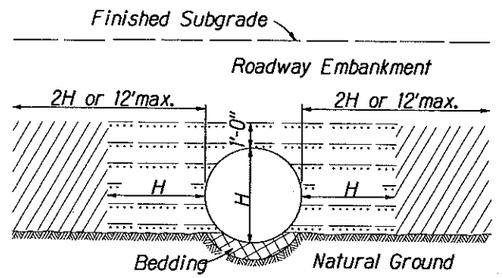

ON NATURAL GROUND

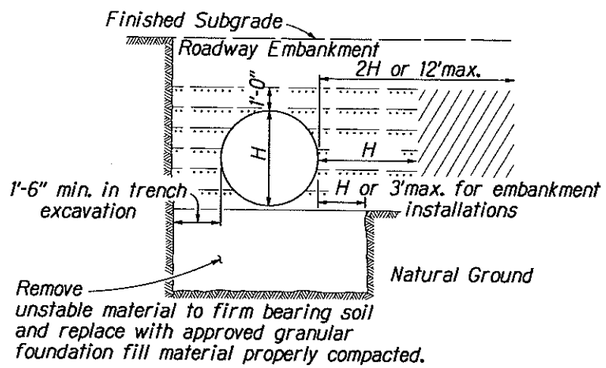

ON UNSTABLE MATERIAL

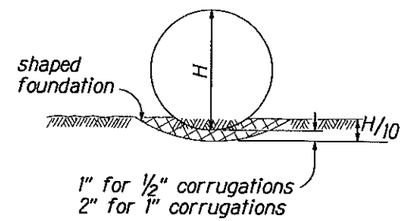

CLASS C BEDDING

NOTES:

1. When directed, camber pipe culverts upward from a chord through the inlet and outlet inverts an ordinate amount equal to 1% of the pipe length. Develop camber on a parabolic curve. If the midpoint elevation on the parabolic curve as designed exceeds the elevation of the inlet invert, reduce the amount of camber or increase the pipe culvert gradient.

2. H equals the diameter of all round pipe culverts or the rise dimension of all pipe arch culverts.

3. Bed pipe culverts 48 inches and larger in diameter and pipe arch culverts 38 inches and greater in rise in Class B Bedding. Bed smaller pipe culverts in Class B or C Bedding.

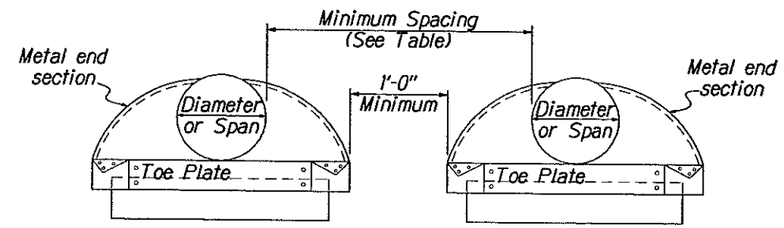

MINIMUM SPACING	
DIAMETER or SPAN INCHES	SPACING INCHES
UP to 48	24
48 and UP	½ Diameter or Span or 36 whichever is less

MULTIPLE PIPE INSTALLATION

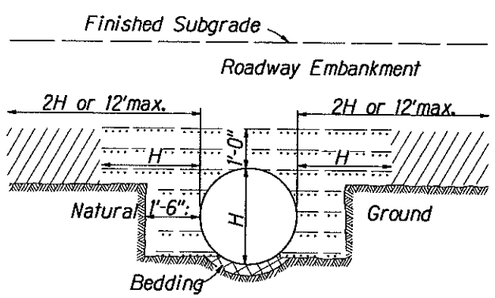

ABOVE AND BELOW NATURAL GROUND

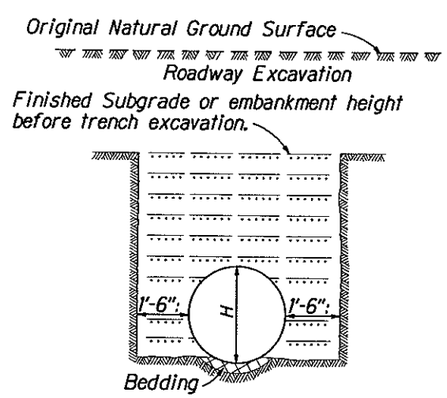

BELOW NATURAL GROUND OR TRENCH EXCAVATION IN EMBANKMENT

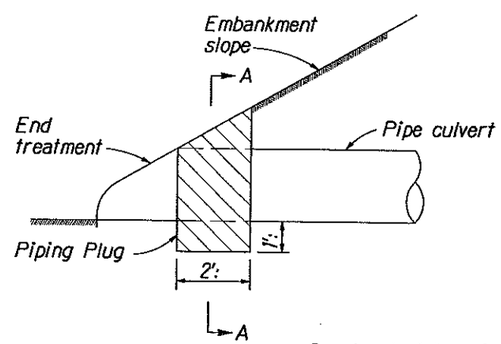

Construct piping plug of impermeable backfill material at the pipe culvert inlet where granular material is used for backfill.

PIPING PLUG

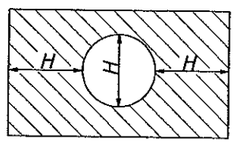

SECTION A-A

Bedding Material

Embankment material placed in layers not exceeding 6" compacted depth.

Approved granular material or fine compactable soil placed in layers not exceeding 6" compacted depth.

U.S DEPARTMENT OF TRANSPORTATION
FEDERAL HIGHWAY ADMINISTRATION
CENTRAL FEDERAL LANDS HIGHWAY DIVISION

SPECIAL DETAIL C602-3

METAL AND PLASTIC PIPE CULVERT BEDDING

Scale: N.T.S. Date: October 15, 2004

SHEET No. 1 OF 1

M:/Mproj/Lennie/2030271/100%/sheets/shtl006.dgn

REG	STATE	PROJECT	SHEET NO.	TOTAL SHEETS
9	HI	HI-A-AD-6(2) Saddle Road	L7	L19

CONCRETE ROUND PIPE CULVERT									
FILL HEIGHT AND PIPE CLASS TABLE									
PIPE SIZE DIAMETER INCHES	MINIMUM COVER INCHES	EMBANKMENT				TRENCH			
		CLASS II	CLASS III	CLASS IV	CLASS V	CLASS II	CLASS III	CLASS IV	CLASS V
		MAXIMUM FILL HEIGHT ABOVE TOP OF PIPE IN FEET							
~~12~~	~~24~~	~~11~~	~~11~~	~~16~~	~~23~~	~~18~~	~~18~~	~~26~~	~~37~~
~~18~~	~~24~~	~~10~~	~~10~~	~~25~~	~~39~~	~~14~~	~~14~~	~~31~~	~~45~~
24	24	11	11	15	31	15	15	22	40
30	24	9	13	16	35	13	17	20	46
36	24	9	9	20	41	11	14	26	56
48	24	12	14	26	44	16	17	31	50
60	24	15	17	28	44	16	20	32	50
72	24	13	17	31	41	16	20	35	49
84	24	13	19	31		15	23	37	
96	24	13	20			16	24		
108	24	16	20			19	26		

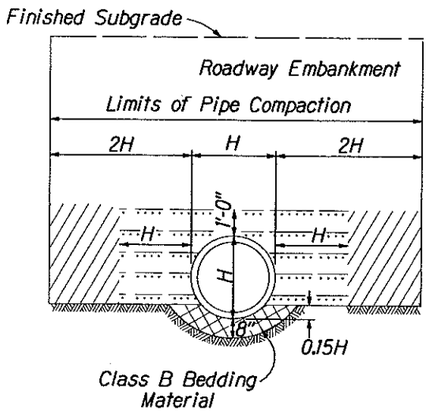

EMBANKMENT INSTALLATION

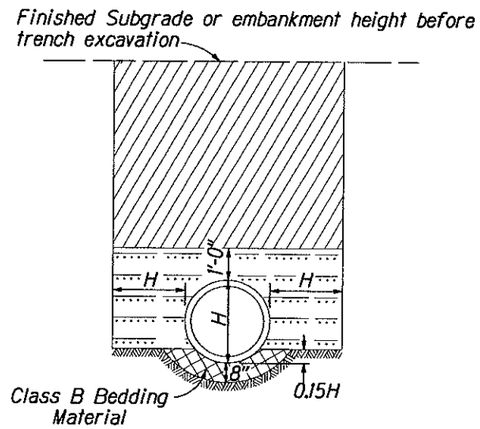

TRENCH INSTALLATION

LEGEND:

- Bedding Material
- Approved granular material or fine compactable soil placed in layers not exceeding 6" compacted depth.
- Embankment material placed in layers not exceeding 6"compacted depth.
- Impermeable backfill material

NOTE:

1. When directed, camber pipe culverts upward from a chord through the inlet and outlet inverts an ordinate amount equal to 1% of the pipe length. Develop camber on a parabolic curve. If the midpoint elevation on the parabolic curve as designed exceeds the elevation of the inlet invert, reduce the amount of camber or increase the pipe culvert gradient.
2. Measure minimum cover from the top of the pipe culvert to the subgrade for flexible pavements, and to the top of the pavement for rigid pavements. Measure maximum fill height from the top of the pipe to the top of the pavement for both flexible and rigid pavements.
3. Pipe compaction limits shown are for pipe installation in an embankment. For pipe installation in a trench, the compaction limits shall be the walls of the trench.
4. Where unyielding or unstable material is encountered, install the pipe culvert according to the limits of pipe compaction shown on standard C602-3.
5. When grades exceed 10%, install supplemental concrete pipe ties on pipe culvert or install bell and spigot pipe.
6. Maximum fill heights for pipe culvert installations may be increased on approval of site-specific structural pipe designs meeting the criteria of AASHTO Standard Specifications for Highway Bridges.

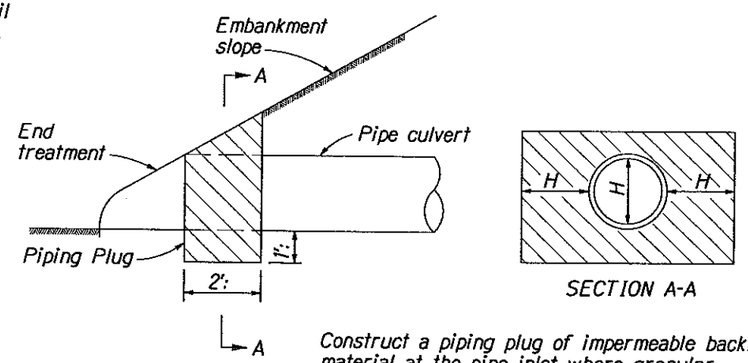

Construct a piping plug of impermeable backfill material at the pipe inlet where granular material is used for backfill.

PIPING PLUG

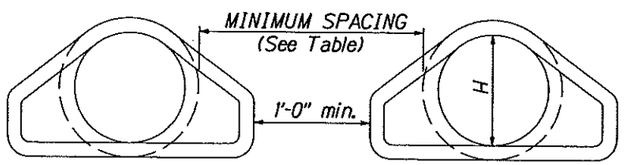

MINIMUM SPACING		
DIAMETER INCHES	EMBANKMENT	TRENCH
12-36	15"	2H
36-96	H/2	72"
OVER 96	48"	72"

MULTIPLE ROUND PIPE INSTALLATION

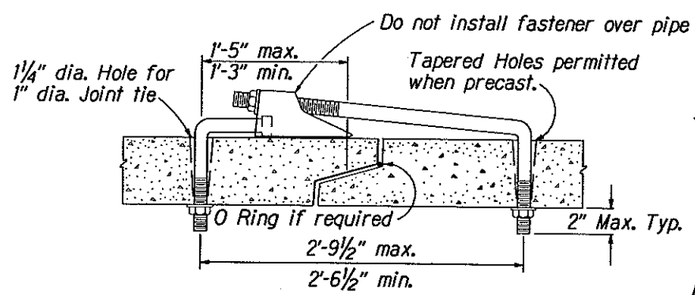

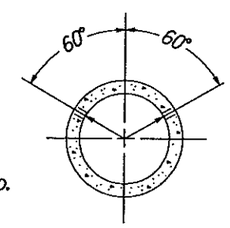

PLACEMENT OF HOLES

SUPPLEMENTAL CONCRETE PIPE TIE

U.S DEPARTMENT OF TRANSPORTATION
FEDERAL HIGHWAY ADMINISTRATION
CENTRAL FEDERAL LANDS HIGHWAY DIVISION

SPECIAL DESIGN C602-7

CONCRETE PIPE CULVERT INSTALLATION

Scale: N.T.S. Date: October 15, 2004

SHEET No. 1 OF 1

L7

M:/Mproj/Lennie/203027/100%/sheets/sht007.dgn

REG	STATE	PROJECT	SHEET NO.	TOTAL SHEETS
9	HI	HI-A-AD-6(2) Saddle Road	L8	L19

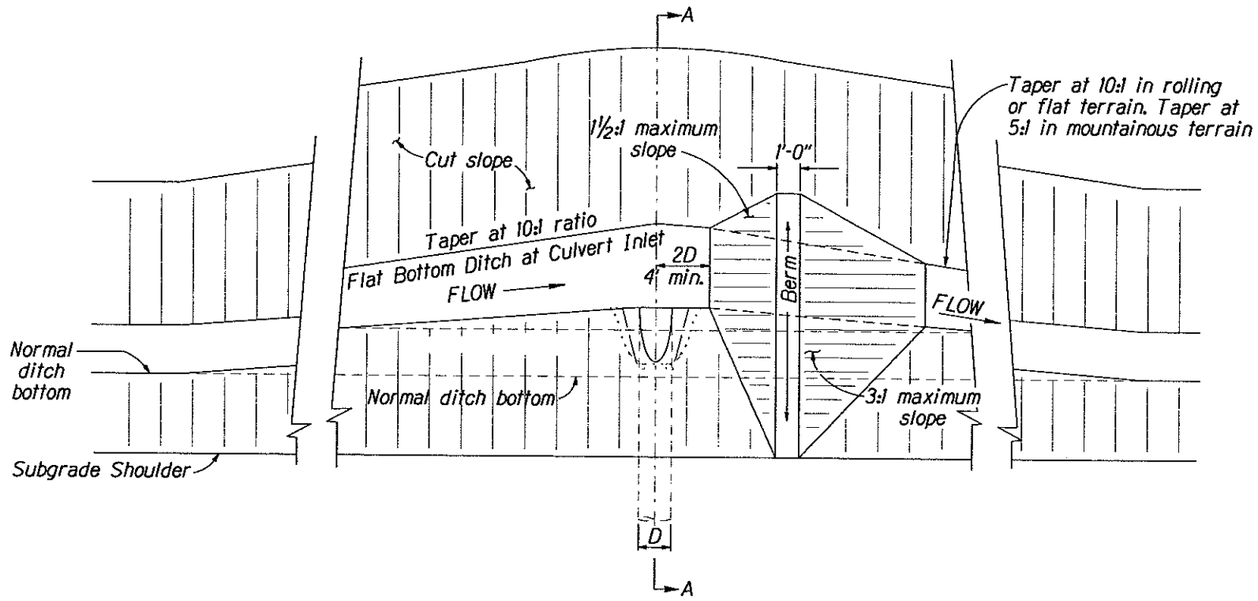

PLAN

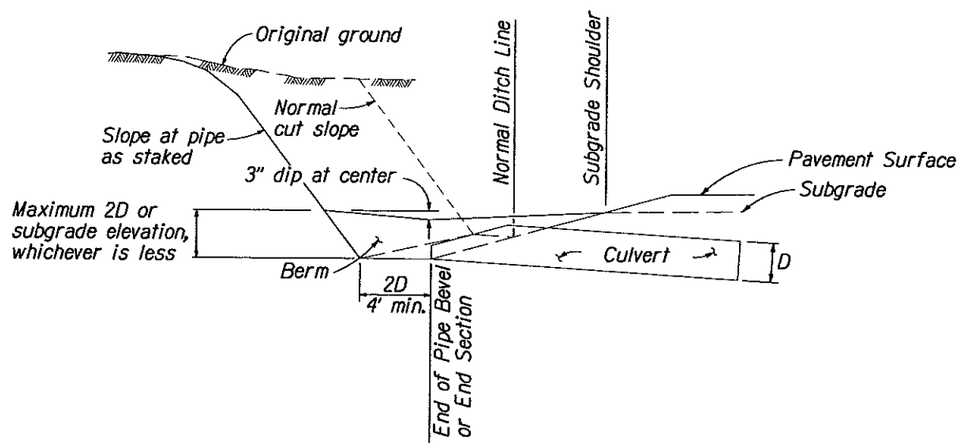

SECTION A-A

NOTE:

1. D equals the diameter of all round pipe or the rise dimension of all pipe arch culverts.

U.S DEPARTMENT OF TRANSPORTATION
FEDERAL HIGHWAY ADMINISTRATION
CENTRAL FEDERAL LANDS HIGHWAY DIVISION

SPECIAL DESIGN C602-6

PIPE CULVERT INLET TREATMENT IN CUT SLOPES

Scale: N.T.S. Date: October 15, 2004

SHEET No. 1 OF 1

L8

M:/Mproj/Lennie/203027/100%/sheets/sht1008.dgn