FED. ROAD DIST. NO.	STATE	PROJ. NO.	FISCAL YEAR	SHEET NO.	TOTAL SHEETS
HAWAI'I	HAW.	190C-01-00M	2000	20	66

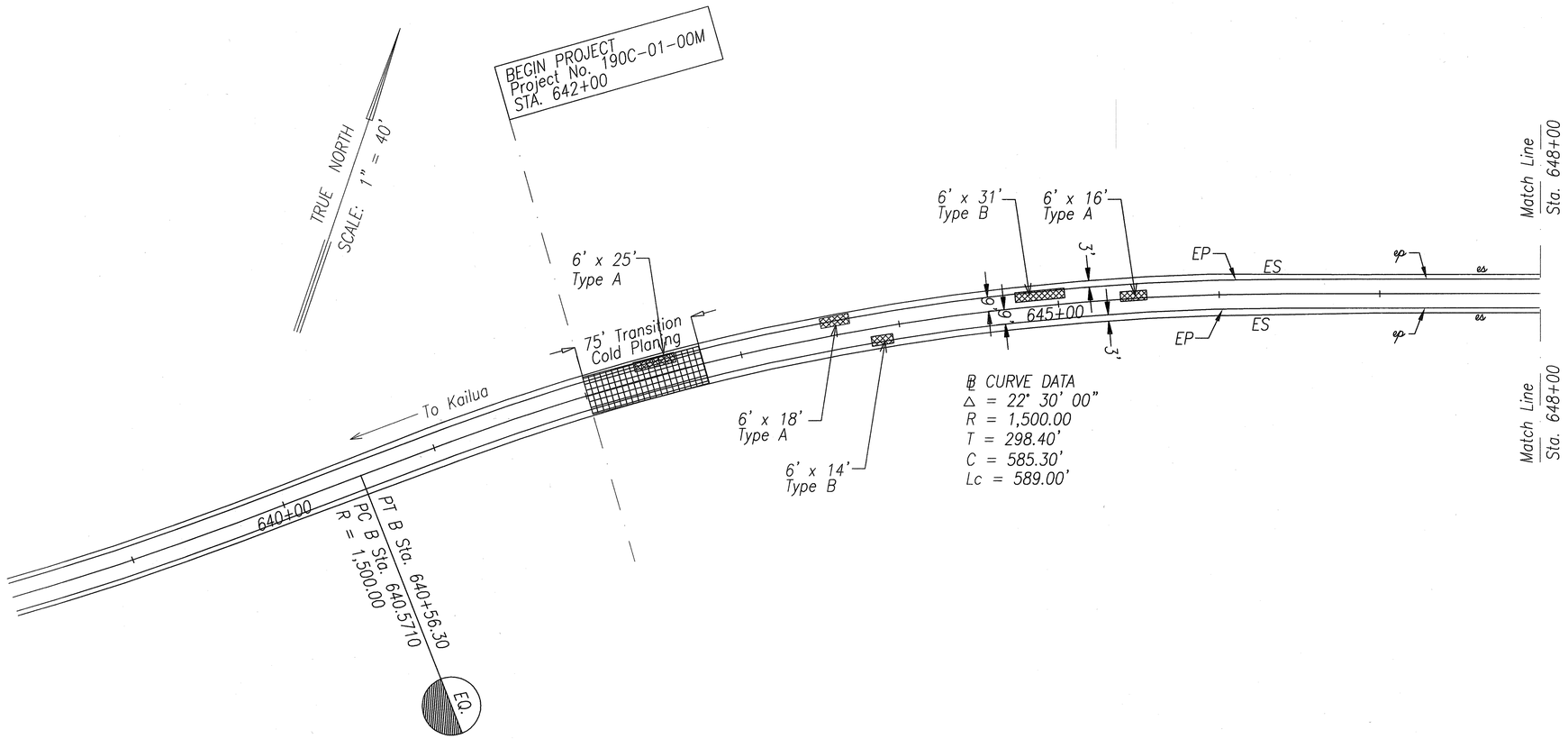

Note:
Refer to revised pavement reconstruction Schedule, sheet no. 115-1 to 115-5 for limits, description, and quantities.

ORIGINAL PLAN	SURVEY PLOTTED BY	DATE
	DRAWN BY X	
NOTE BOOK bp/hob.1	TRACED BY X	
	DESIGNED BY X	
No. ...dgn	QUANTITIES BY	
	CHECKED BY	

STATE OF HAWAII
DEPARTMENT OF TRANSPORTATION
HIGHWAYS DIVISION

ROADWAY PLAN
ROUTE 190
HAWAII BELT ROAD RESURFACING
KEAMUKU TO PUUANAHULU
PROJECT NO. 190C-01-00M

Scale: Noted Date: April, 2000

SHEET No. 1 OF 19 SHEETS

"AS-BUILT"

FED. ROAD DIST. NO.	STATE	PROJ. NO.	FISCAL YEAR	SHEET NO.	TOTAL SHEETS
HAWAI'I	HAW.	190C-01-00M	2000	21	66

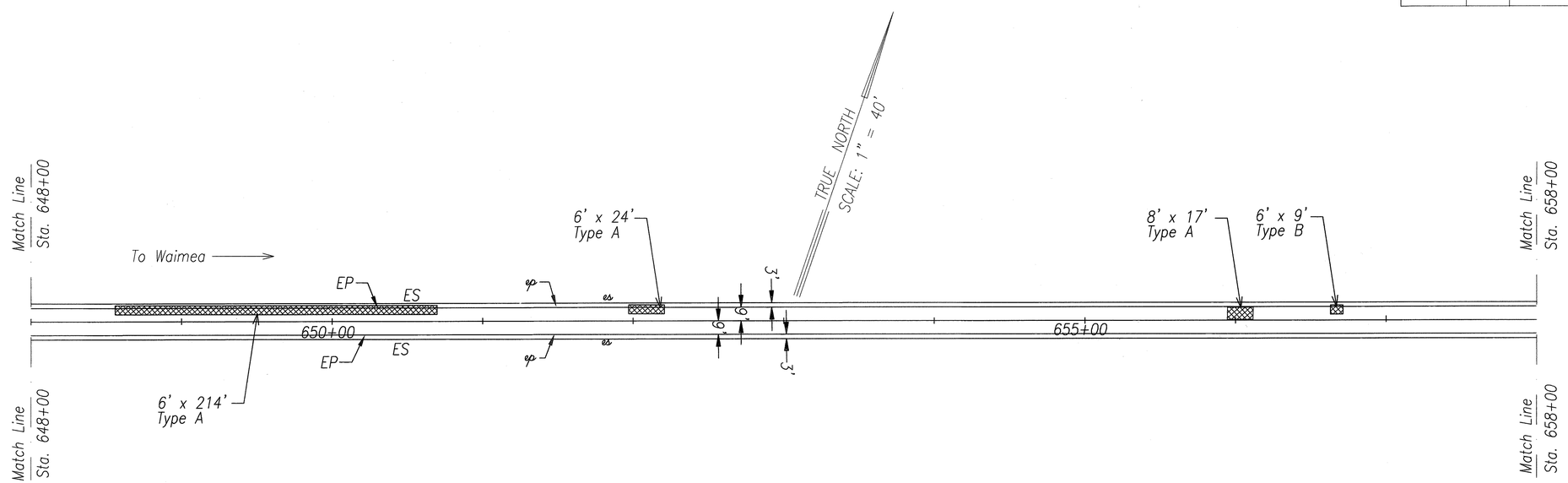

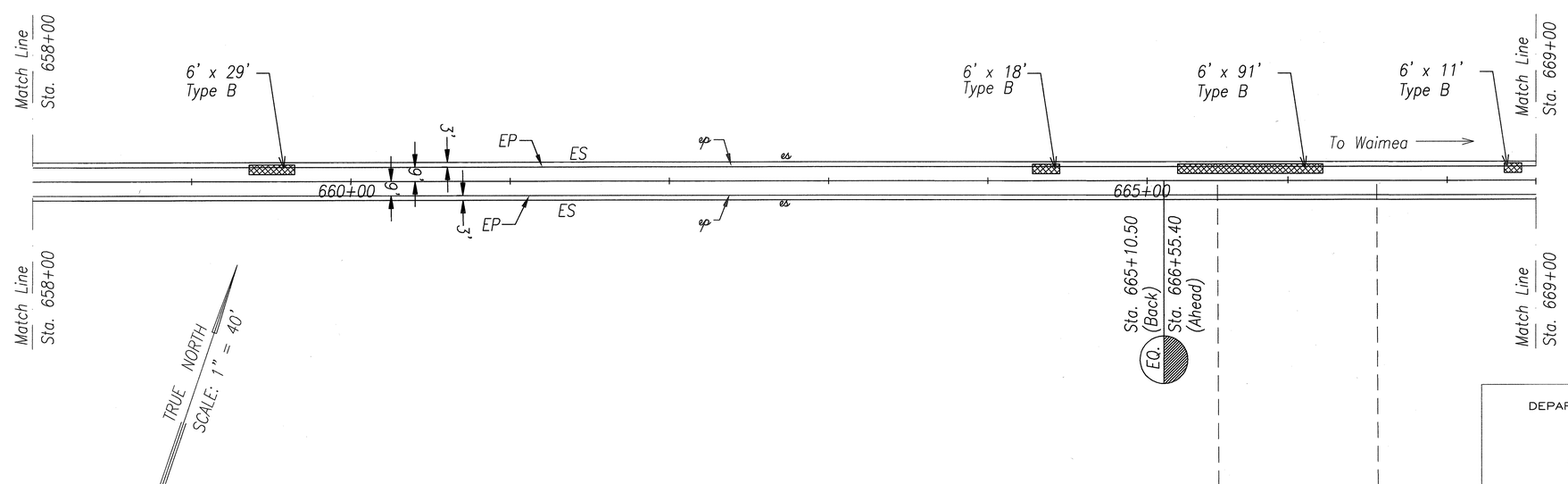

See note sheet No. 20

STATE OF HAWAII
DEPARTMENT OF TRANSPORTATION
HIGHWAYS DIVISION

ROADWAY PLAN
ROUTE 190
HAWAII BELT ROAD RESURFACING
KEAMUKU TO PUUANAHULU
PROJECT NO. 190C-01-00M

Scale: Noted Date: April, 2000

SHEET No. 2 OF 19 SHEETS

ORIGINAL PLAN	SURVEY PLOTTED BY	DATE
	DRAWN BY X	
	TRACED BY X	
NOTE BOOK	DESIGNED BY X	
bqkhab1	QUANTITIES BY	
No. .dgn	CHECKED BY	

"AS-BUILT"

FED. ROAD DIST. NO.	STATE	PROJ. NO.	FISCAL YEAR	SHEET NO.	TOTAL SHEETS
HAWAI'I	HAW.	190C-01-00M	2000	22	66

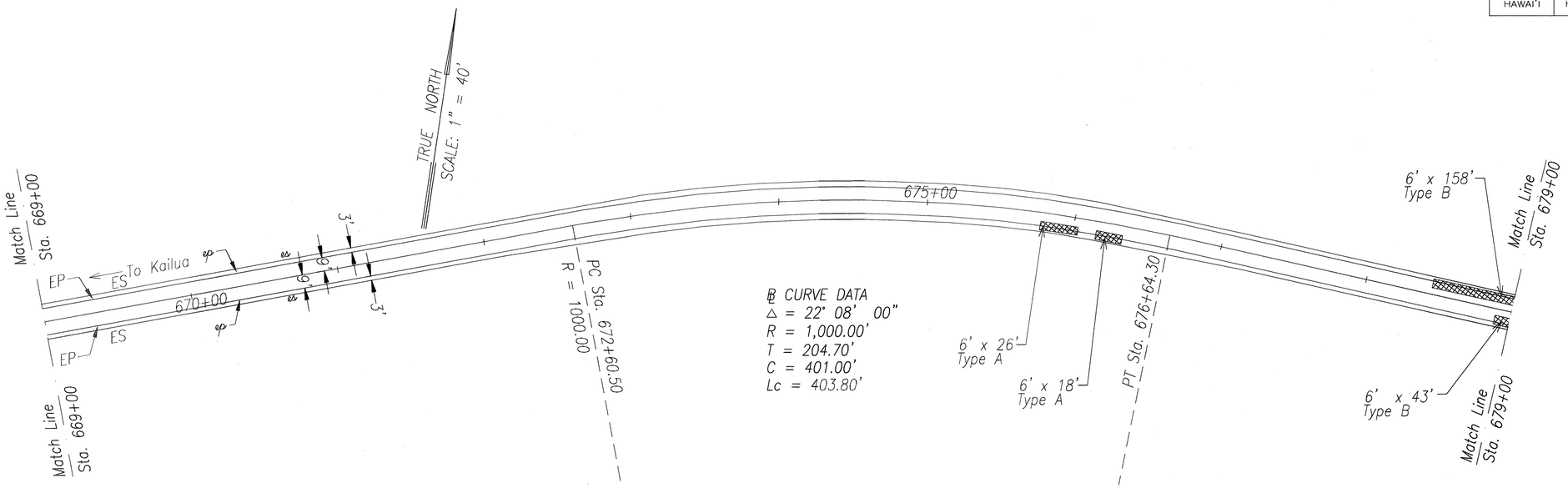

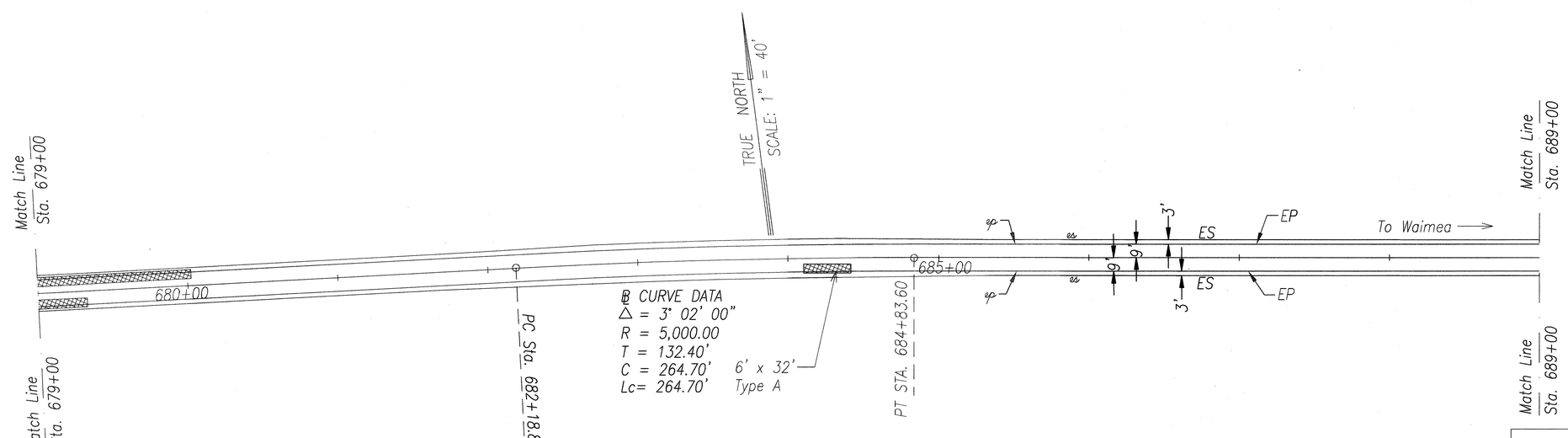

See note sheet No. 20

ORIGINAL PLANS	SURVEY PLOTTED BY	DATE
	DRAWN BY X	
	TRACED BY	
NOTE BOOK	DESIGNED BY X	
Design1	QUANTITIES BY	
No. dgn	CHECKED BY	

STATE OF HAWAII
DEPARTMENT OF TRANSPORTATION
HIGHWAYS DIVISION

ROADWAY PLAN

ROUTE 190

HAWAII BELT ROAD RESURFACING

KEAMUKU TO PUUANAHULU

PROJECT NO. 190C-01-00M

Scale: Noted Date: April, 2000

SHEET No. 3 OF 19 SHEETS

"AS-BUILT"

FED. ROAD DIST. NO.	STATE	PROJ. NO.	FISCAL YEAR	SHEET NO.	TOTAL SHEETS
HAWAI'I	HAW.	190C-01-00M	2000	23	66

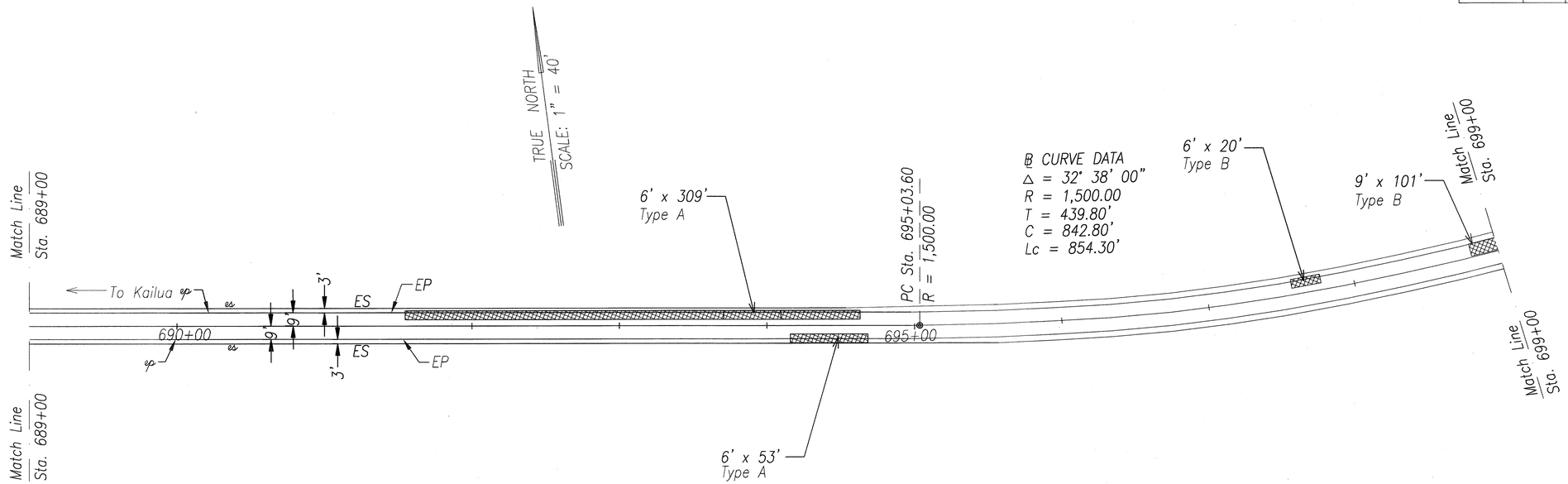

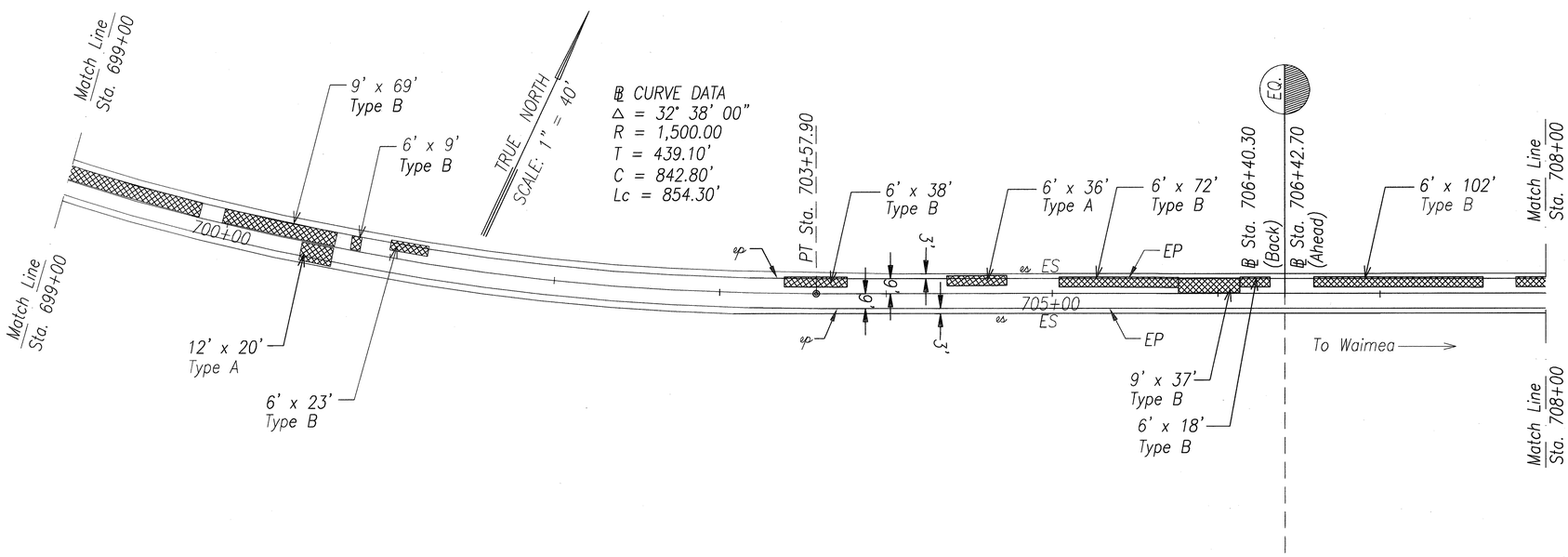

See note sheet No. 20

ORIGINAL PLAN	SURVEY PLOTTED BY	DATE X
	DRAWN BY X	
	TRACED BY X	
NOTE BOOK bckmab1	DESIGNED BY X	
	QUANTITIES BY	
No. dgn	CHECKED BY	

STATE OF HAWAII
DEPARTMENT OF TRANSPORTATION
HIGHWAYS DIVISION

ROADWAY PLAN

ROUTE 190
HAWAII BELT ROAD RESURFACING
KEAMUKU TO PUUANAHULU
PROJECT NO. 190C-01-00M

Scale: Noted Date: April 2000

SHEET No. 4 OF 19 SHEETS

"AS-BUILT"

FED. ROAD DIST. NO.	STATE	PROJ. NO.	FISCAL YEAR	SHEET NO.	TOTAL SHEETS
HAWAI'I	HAW.	190C-01-00M	2000	24	66

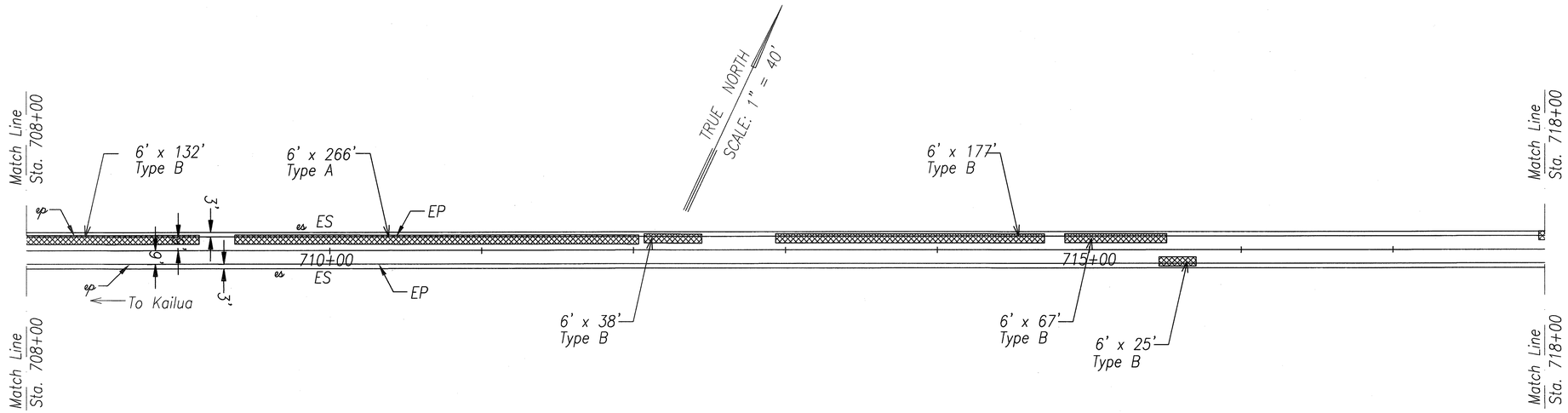

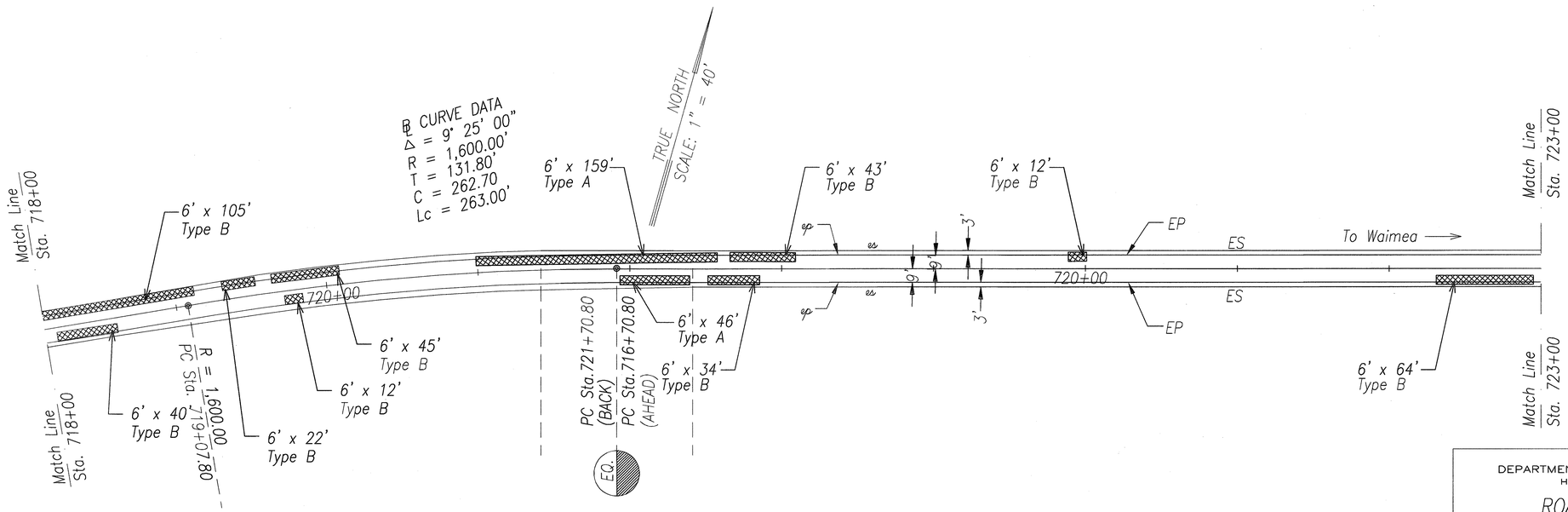

See note sheet No.20

STATE OF HAWAII
DEPARTMENT OF TRANSPORTATION
HIGHWAYS DIVISION

ROADWAY PLAN
ROUTE 190
HAWAII BELT ROAD RESURFACING
KEAMUKU TO PUUANAHULU
PROJECT NO. 190C-01-00M

Scale: Noted Date: April, 2000

SHEET No. 5 OF 19 SHEETS

ORIGINAL PLAN
SURVEY PLOTTED BY ____ DATE ____
DRAWN BY X
TRACED BY X
DESIGNED BY X
QUANTITIES BY ____
CHECKED BY ____
NOTE BOOK No. Sketch 1 ____ pg. ____

"AS-BUILT"

FED. ROAD DIST. NO.	STATE	PROJ. NO.	FISCAL YEAR	SHEET NO.	TOTAL SHEETS
HAWAI'I	HAW.	190C-01-00M	2000	25	66

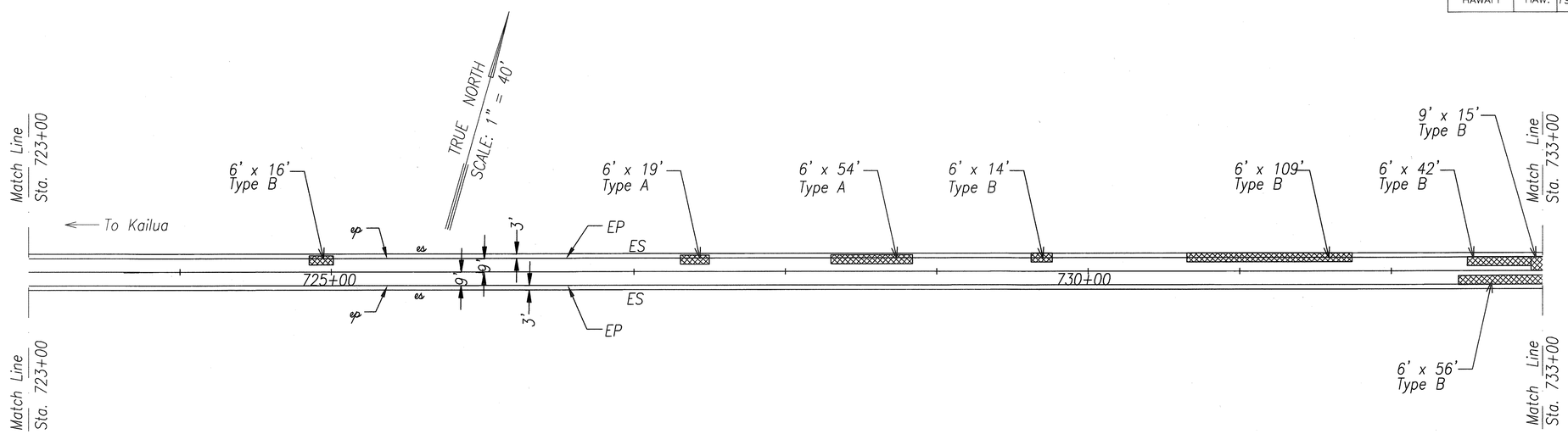

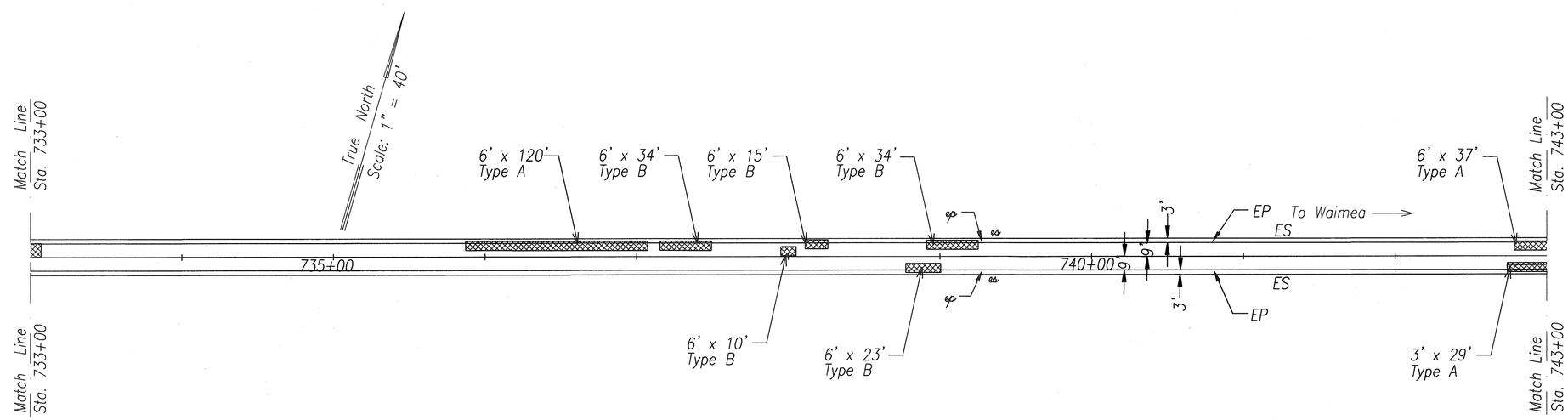

ORIGINAL PLAN	SURVEY PLOTTED BY	DATE
	DRAWN BY X	X
NOTE BOOK	TRACED BY X	
	DESIGNED BY X	
No.	QUANTITIES BY	
	CHECKED BY	

STATE OF HAWAII
DEPARTMENT OF TRANSPORTATION
HIGHWAYS DIVISION

ROADWAY PLAN

ROUTE 190

HAWAII BELT ROAD RESURFACING

KEAMUKU TO PUUANAHULU

PROJECT NO. 190C-01-00M

Scale: Noted Date: April, 2000

SHEET No. 6 OF 19 SHEETS

See note sheet No 20

"AS-BUILT"

FED. ROAD DIST. NO.	STATE	PROJ. NO.	FISCAL YEAR	SHEET NO.	TOTAL SHEETS
HAWAI'I	HAW.	190C-01-00M	2000	26	66

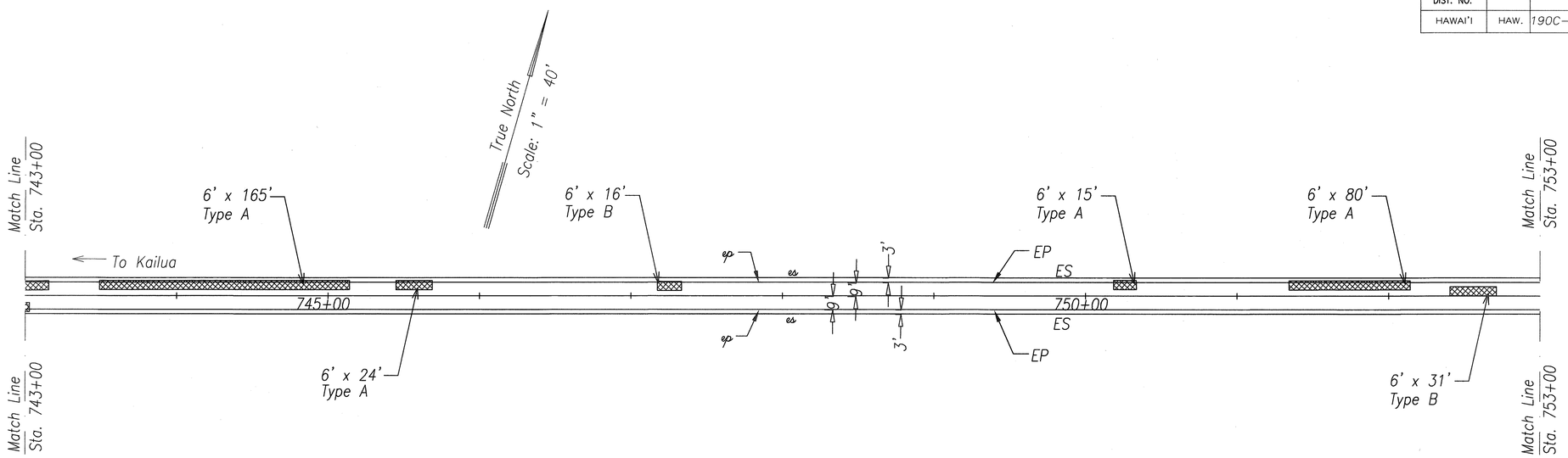

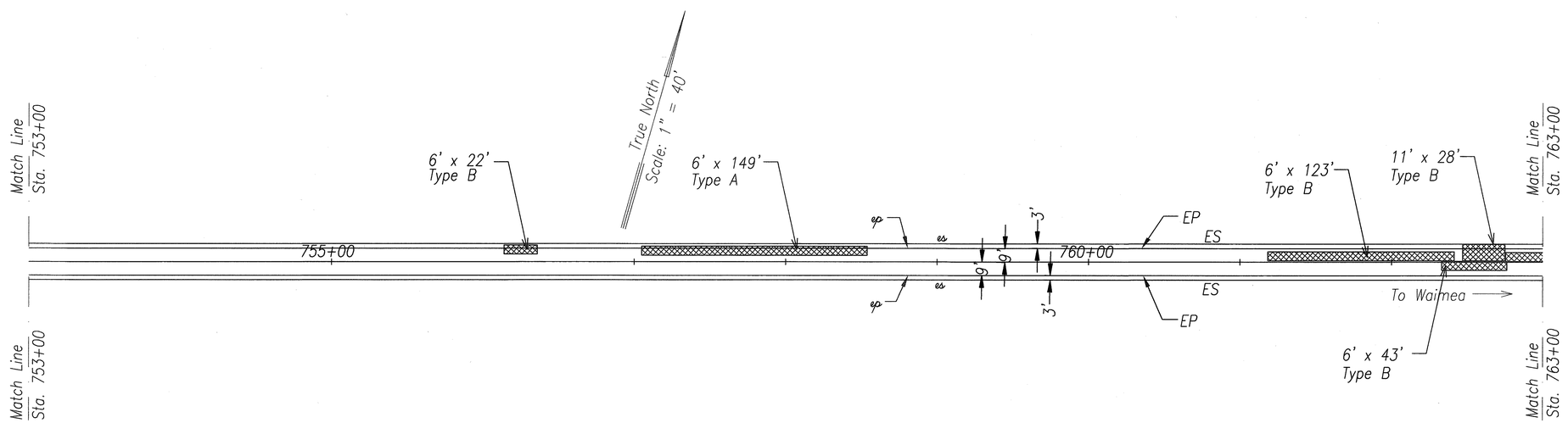

ORIGINAL PLAN	SURVEY PLOTTED BY	DATE
	DRAWN BY X	
	TRACED BY X	
NOTE BOOK	DESIGNED BY X	
Divisor1	QUANTITIES BY	
No. dgn	CHECKED BY	

STATE OF HAWAII
DEPARTMENT OF TRANSPORTATION
HIGHWAYS DIVISION

ROADWAY PLAN

ROUTE 190

HAWAII BELT ROAD RESURFACING

KEAMUKU TO PUUANAHULU

PROJECT NO. 190C-01-00M

Scale: Noted Date: April, 2000

SHEET No. 7 OF 19 SHEETS

See note sheet No. 20

"AS-BUILT"

FED. ROAD DIST. NO.	STATE	PROJ. NO.	FISCAL YEAR	SHEET NO.	TOTAL SHEETS
HAWAI'I	HAW.	190C-01-00M	2000	27	66

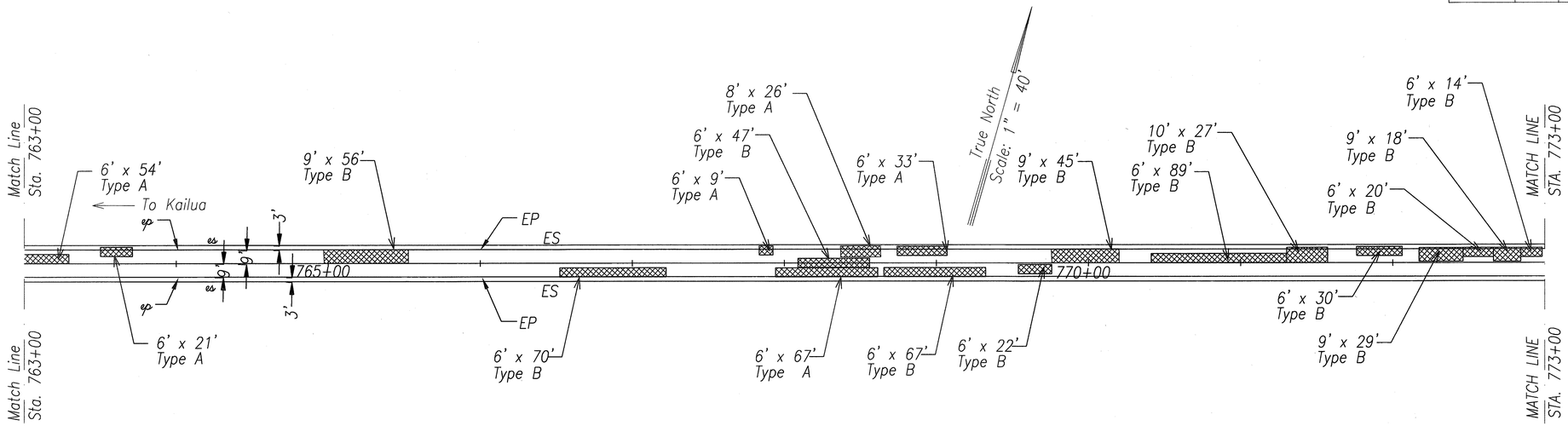

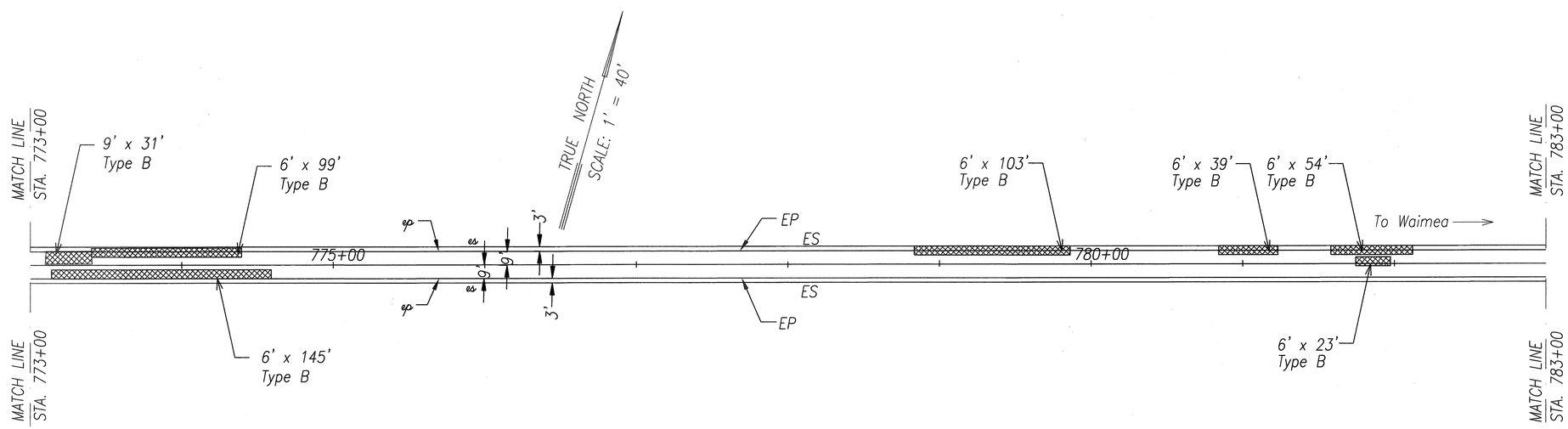

ORIGINAL PLAN	SURVEY PLOTTED BY ____ DATE ____
	DRAWN BY X
	TRACED BY ____
NOTE BOOK bpdhob1	DESIGNED BY X
No. ____ dgn	QUANTITIES BY ____
	CHECKED BY ____

STATE OF HAWAII
DEPARTMENT OF TRANSPORTATION
HIGHWAYS DIVISION

ROADWAY PLAN

ROUTE 190
HAWAII BELT ROAD RESURFACING
KEAMUKU TO PUUANAHULU
PROJECT NO. 190C-01-00M

Scale: Noted Date: April, 2000

SHEET No. 8 OF 19 SHEETS

See note sheet No. 20

"AS-BUILT"

FED. ROAD DIST. NO.	STATE	PROJ. NO.	FISCAL YEAR	SHEET NO.	TOTAL SHEETS
HAWAI'I	HAW.	190C-01-00M	2000	28	66

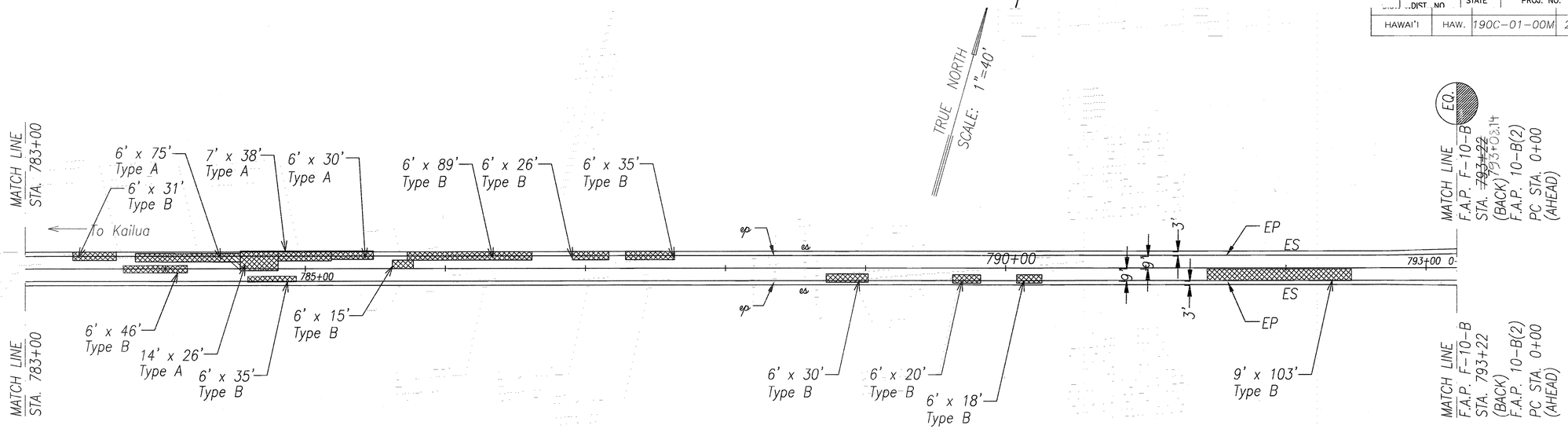

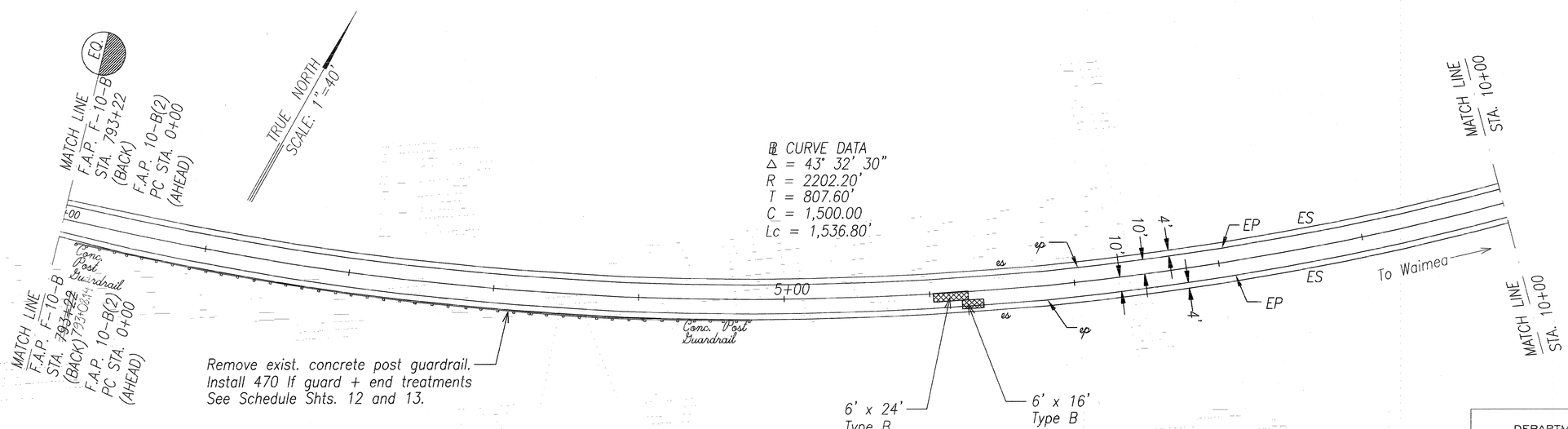

Date	Revisions
6/13/00	See note sheet No. 20 Revised callout regarding guardrails to include guardrail sheets 12 and 13.

STATE OF HAWAII
DEPARTMENT OF TRANSPORTATION
HIGHWAYS DIVISION

ROADWAY PLAN

ROUTE 190
HAWAII BELT ROAD RESURFACING
KEAMUKU TO PUUANAHULU
PROJECT NO. 190C-01-00M

Scale: Noted Date: April, 2000

SHEET No. 9 OF 19 SHEETS

ORIGINAL PLAN | SURVEY PLOTTED BY | DRAWN BY X | TRACED BY | DESIGNED BY X | QUANTITIES BY | CHECKED BY | DATE X
NOTE BOOK bqhhab1
No. .dgn

"AS-BUILT"

ADD. 28

FED. ROAD DIST. NO.	STATE	PROJ. NO.	FISCAL YEAR	SHEET NO.	TOTAL SHEETS
HAWAI'I	HAW.	190C-01-00M	2000	29	66

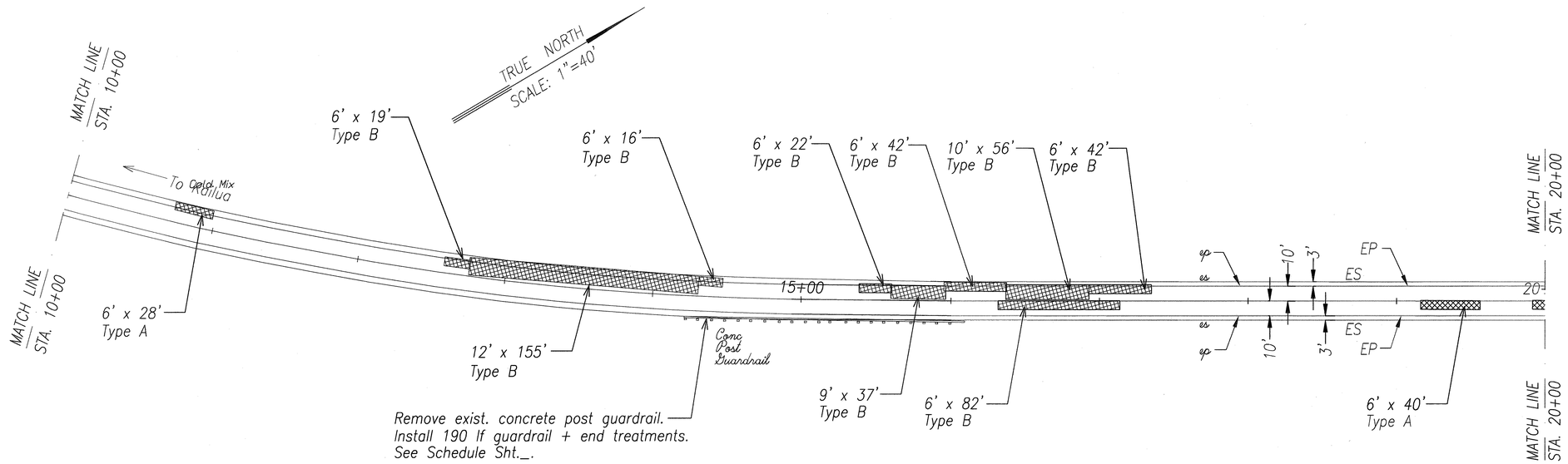

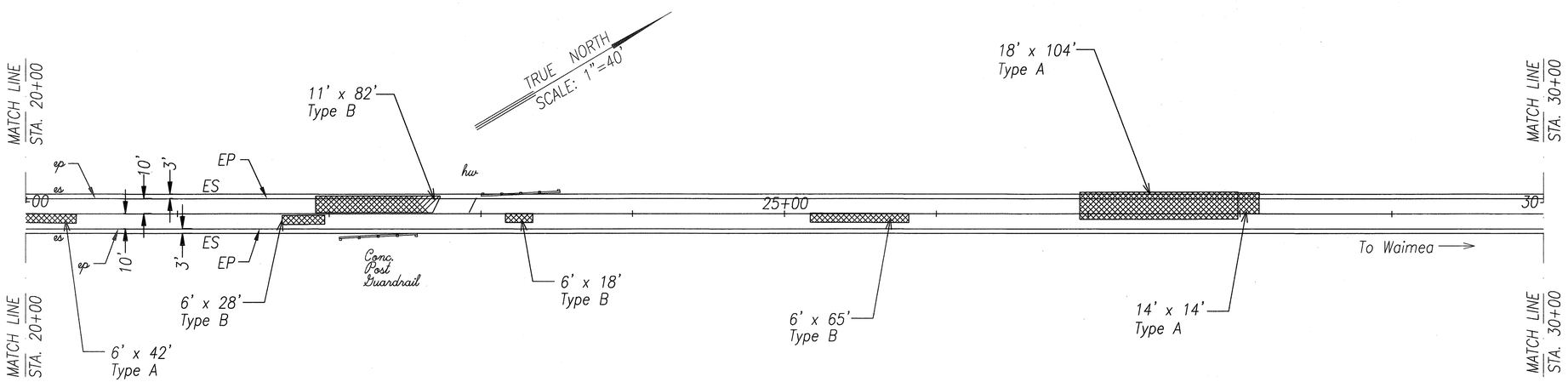

See note sheet No. 20

STATE OF HAWAII
DEPARTMENT OF TRANSPORTATION
HIGHWAYS DIVISION

ROADWAY PLAN

ROUTE 190
HAWAII BELT ROAD RESURFACING
KEAMUKU TO PUUANAHULU
PROJECT NO. 190C-01-00M

Scale: Noted Date: April, 2000

SHEET No. 10 OF 19 SHEETS

ORIGINAL PLAN | SURVEY PLOTTED BY | DRAWN BY | NOTE BOOK No. | TRACED BY | DESIGNED BY | QUANTITIES BY | CHECKED BY | DATE

"AS-BUILT"

FED. ROAD DIST. NO.	STATE	PROJ. NO.	FISCAL YEAR	SHEET NO.	TOTAL SHEETS
HAWAI'I	HAW.	190C-01-00M	2000	30	66

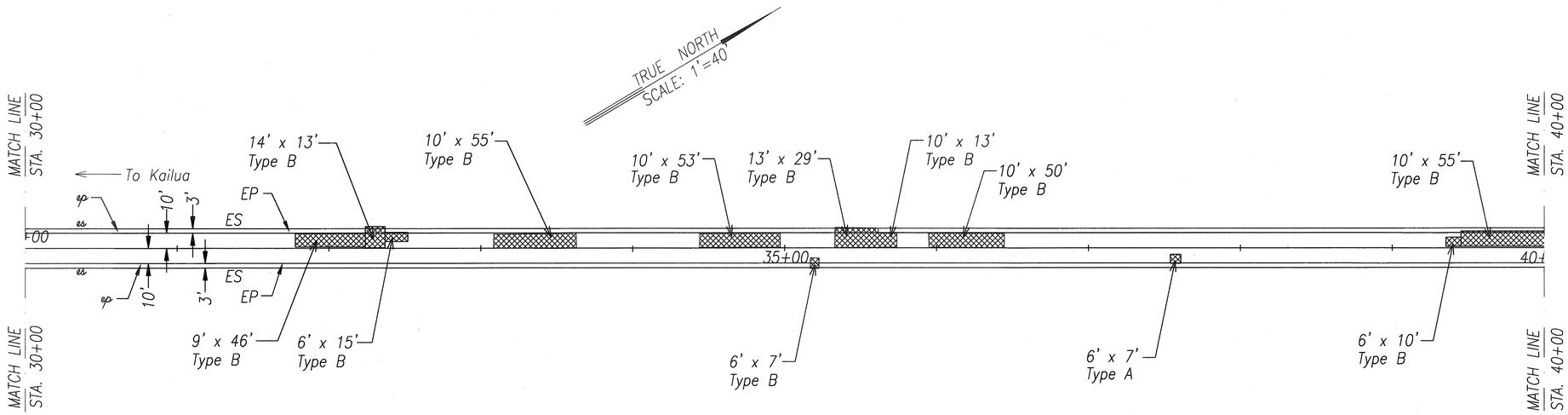

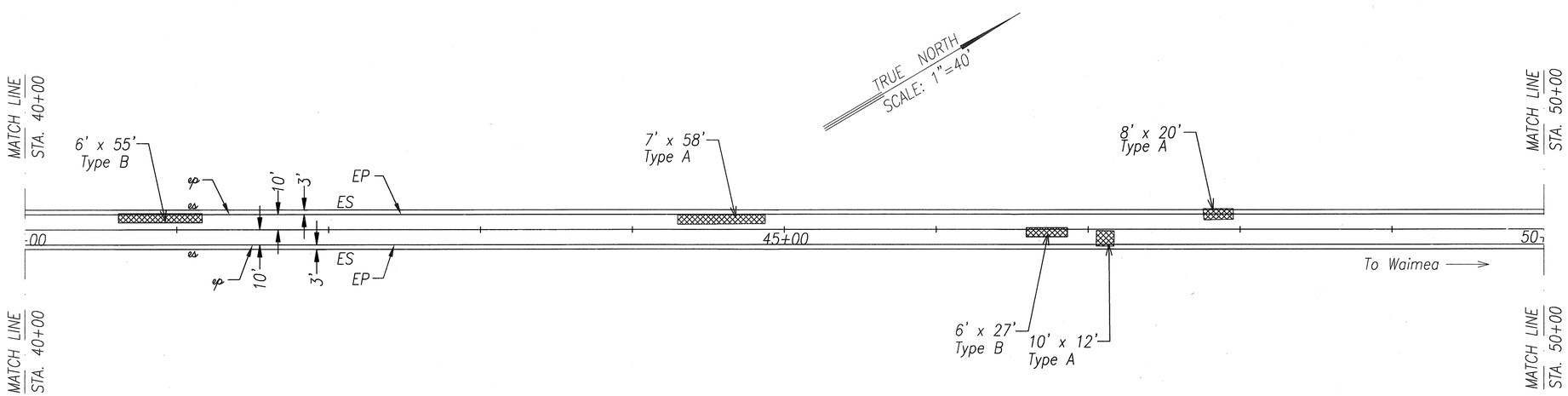

ORIGINAL PLAN	SURVEY PLOTTED BY ____ DATE
	DRAWN BY X
	TRACED BY
NOTE BOOK	DESIGNED BY X
Sheets 1	QUANTITIES BY
No. ___ dgn	CHECKED BY

STATE OF HAWAII
DEPARTMENT OF TRANSPORTATION
HIGHWAYS DIVISION

ROADWAY PLAN

ROUTE 190
HAWAII BELT ROAD RESURFACING
KEAMUKU TO PUUANAHULU
PROJECT NO. 190C-01-00M

Scale: Noted Date: April, 2000

SHEET No. 11 OF 19 SHEETS

See note sheet No. 20

"AS-BUILT"

FED. ROAD DIST. NO.	STATE	PROJ. NO.	FISCAL YEAR	SHEET NO.	TOTAL SHEETS
HAWAI'I	HAW.	190C-01-00M	2000	31	66

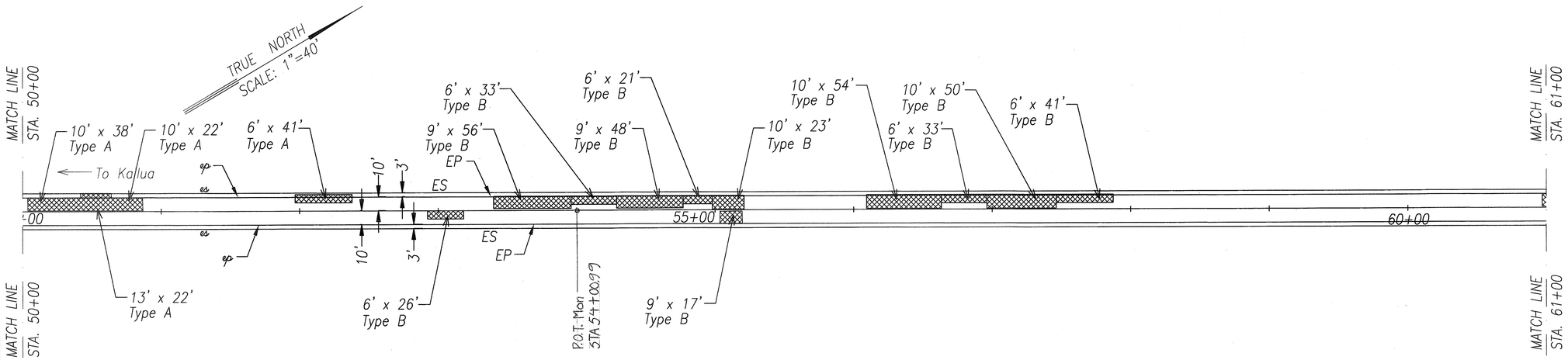

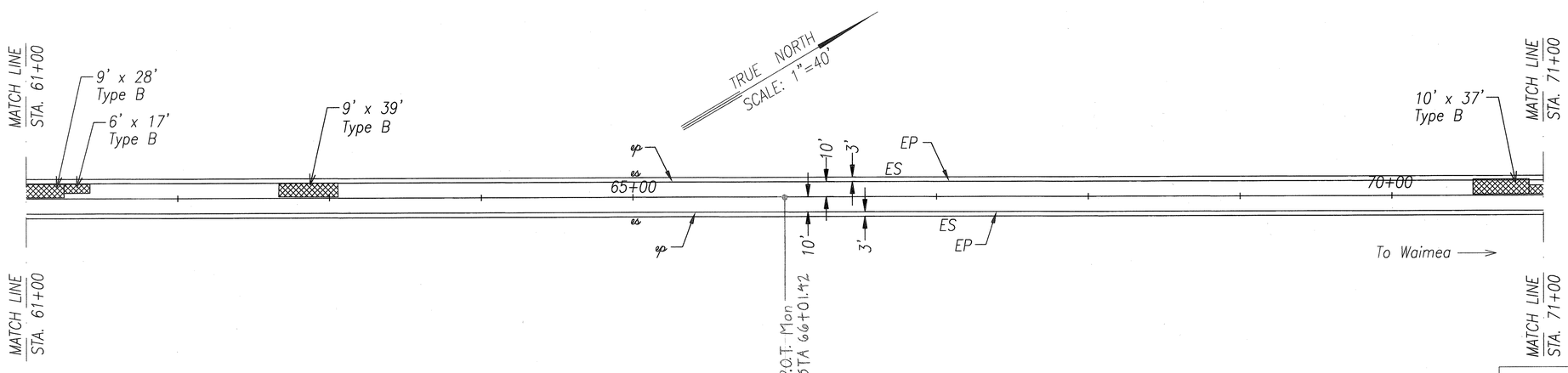

See note sheet No. 20

ORIGINAL PLAN	SURVEY PLOTTED BY	DATE
	TRACED BY X	
NOTE BOOK	DESIGNED BY X	
No. Bp/Ob/ Pgs.	QUANTITIES BY	
	CHECKED BY	

STATE OF HAWAII
DEPARTMENT OF TRANSPORTATION
HIGHWAYS DIVISION

ROADWAY PLAN

ROUTE 190
HAWAII BELT ROAD RESURFACING
KEAMUKU TO PUUANAHULU
PROJECT NO. 190C-01-00M

Scale: Noted Date: April, 2000

SHEET No. 12 OF 19 SHEETS

"AS-BUILT"

FED. ROAD DIST. NO.	STATE	PROJ. NO.	FISCAL YEAR	SHEET NO.	TOTAL SHEETS
HAWAI'I	HAW.	190C-01-00M	2000	32	66

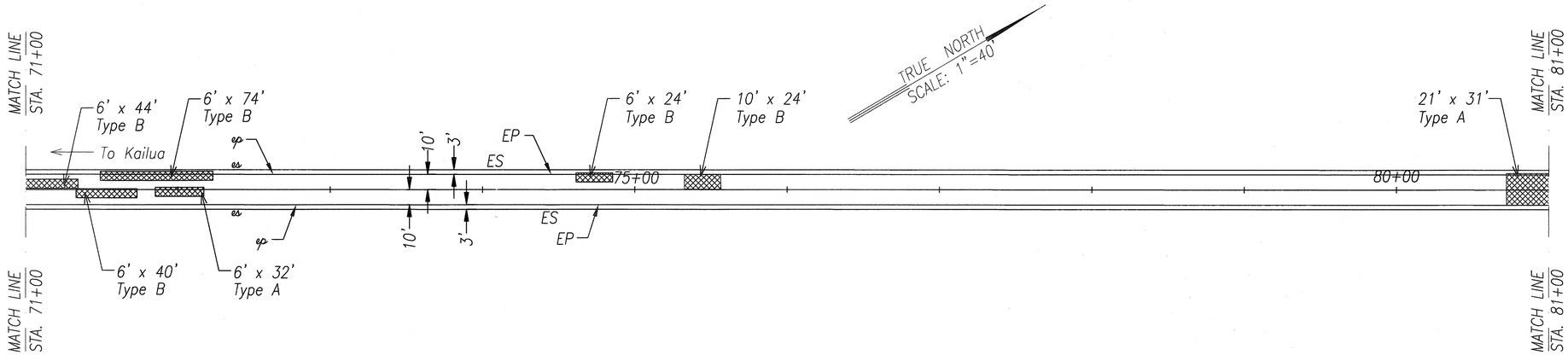

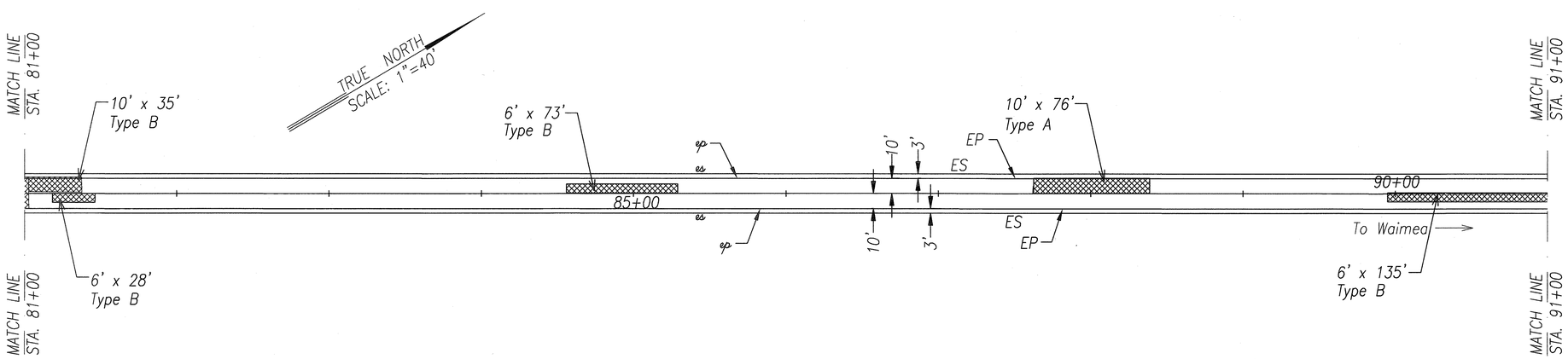

See note sheet No.20

ORIGINAL PLAN	SURVEY PLOTTED BY	DATE
	DRAWN BY X	X
	TRACED BY X	
NOTE BOOK Series No.	DESIGNED BY X	
	QUANTITIES BY X	
	CHECKED BY X	

STATE OF HAWAII
DEPARTMENT OF TRANSPORTATION
HIGHWAYS DIVISION

ROADWAY PLANS

ROUTE 190
HAWAII BELT ROAD RESURFACING
KEAMUKU TO PUUANAHULU
PROJECT NO. 190C-01-00M

Scale: Noted Date: April, 2000

SHEET No. 13 OF 19 SHEETS

"AS-BUILT"

FED. ROAD DIST. NO.	STATE	PROJ. NO.	FISCAL YEAR	SHEET NO.	TOTAL SHEETS
HAWAI'I	HAW.	190C-01-00M	2000	33	66

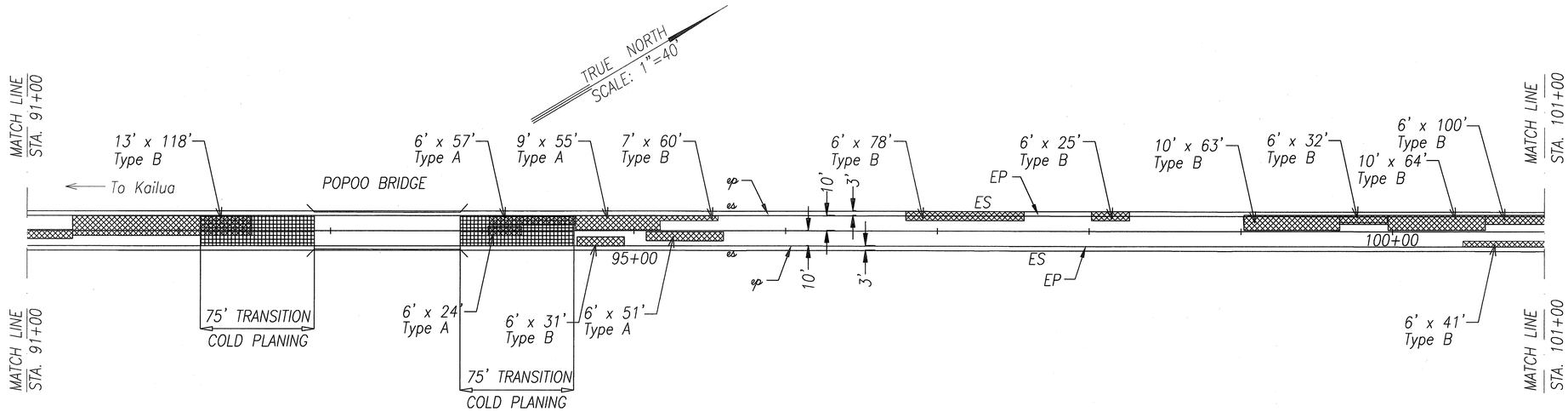

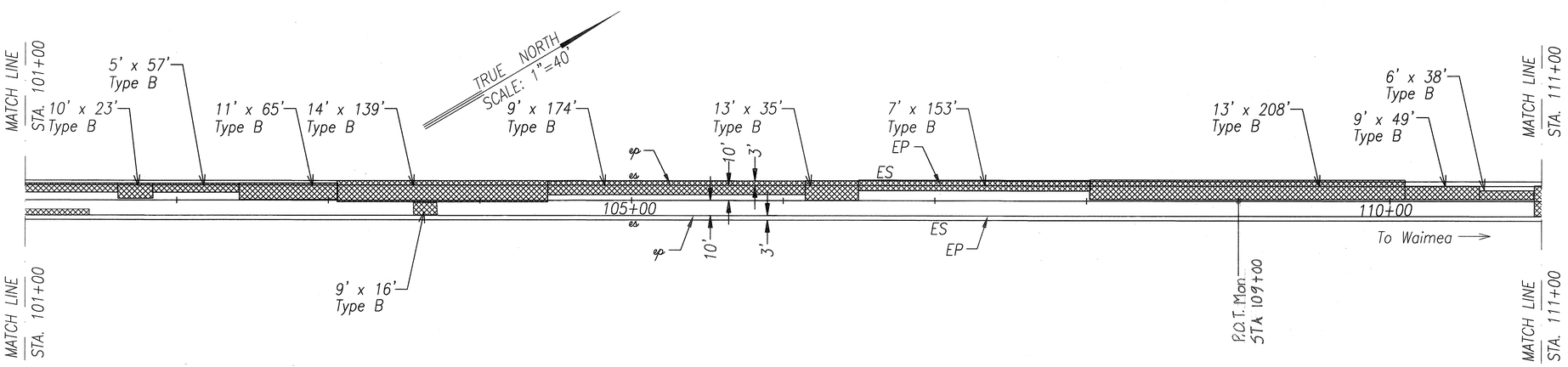

See note sheet No. 20

ORIGINAL PLAN	SURVEY PLOTTED BY	DATE
	DRAWN BY X	
	TRACED BY X	
NOTE BOOK Dwnwrd	DESIGNED BY X	
	QUANTITIES BY X	
No. dgn	CHECKED BY	

STATE OF HAWAII
DEPARTMENT OF TRANSPORTATION
HIGHWAYS DIVISION

ROADWAY PLANS

ROUTE 190
HAWAII BELT ROAD RESURFACING
KEAMUKU TO PUUANAHULU
PROJECT NO. 190C-01-00M

Scale: Noted Date: April, 2000

SHEET No. 14 OF 19 SHEETS

"AS-BUILT"

FED. ROAD DIST. NO.	STATE	PROJ. NO.	FISCAL YEAR	SHEET NO.	TOTAL SHEETS
HAWAI'I	HAW.	190C-01-00M	2000	34	66

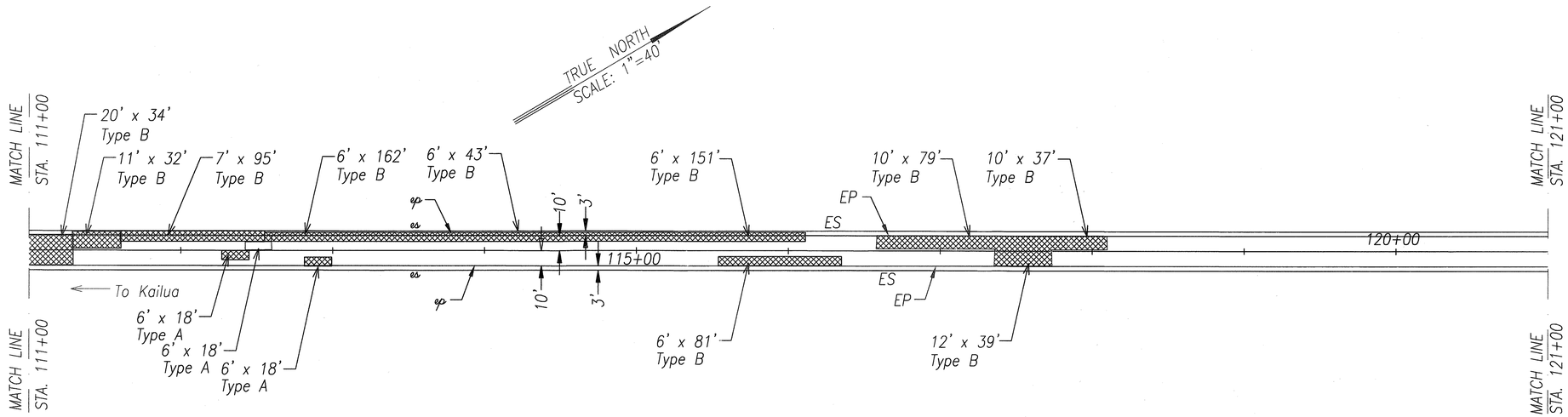

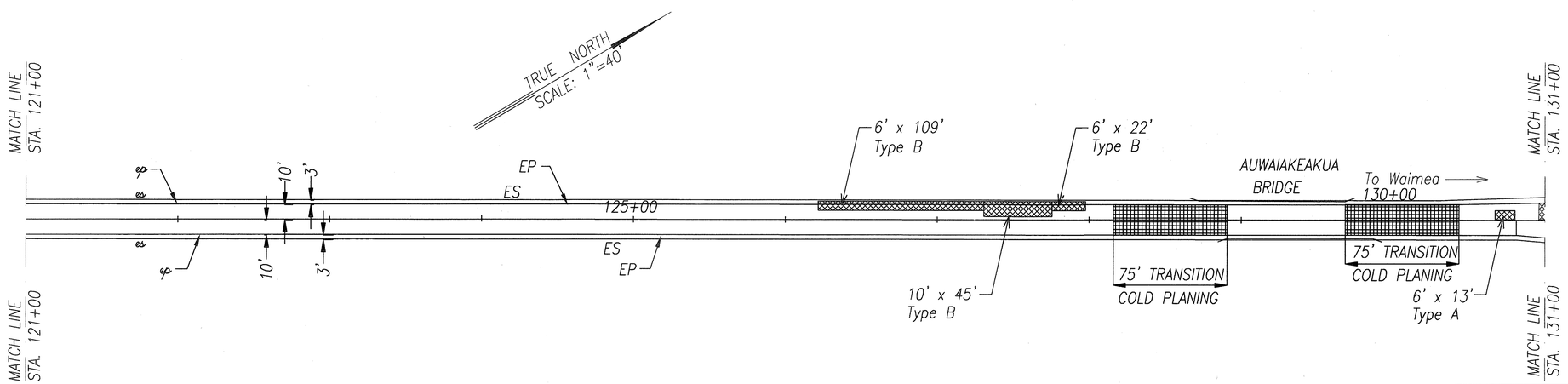

ORIGINAL PLAN	SURVEY PLOTTED BY
	DRAWN BY X
NOTE BOOK	TRACED BY
	DESIGNED BY X
	QUANTITIES BY
No. bp.no.1 .dgn	CHECKED BY
	DATE

STATE OF HAWAII
DEPARTMENT OF TRANSPORTATION
HIGHWAYS DIVISION

ROADWAY PLAN

ROUTE 190
HAWAII BELT ROAD RESURFACING
KEAMUKU TO PUUANAHULU
PROJECT NO. 190C-01-00M

Scale: Noted Date: April, 2000

SHEET No. 15 OF 19 SHEETS

See note sheet No20

"AS-BUILT"

FED. ROAD DIST. NO.	STATE	PROJ. NO.	FISCAL YEAR	SHEET NO.	TOTAL SHEETS
HAWAI'I	HAW.	190C-01-00M	2000	35	66

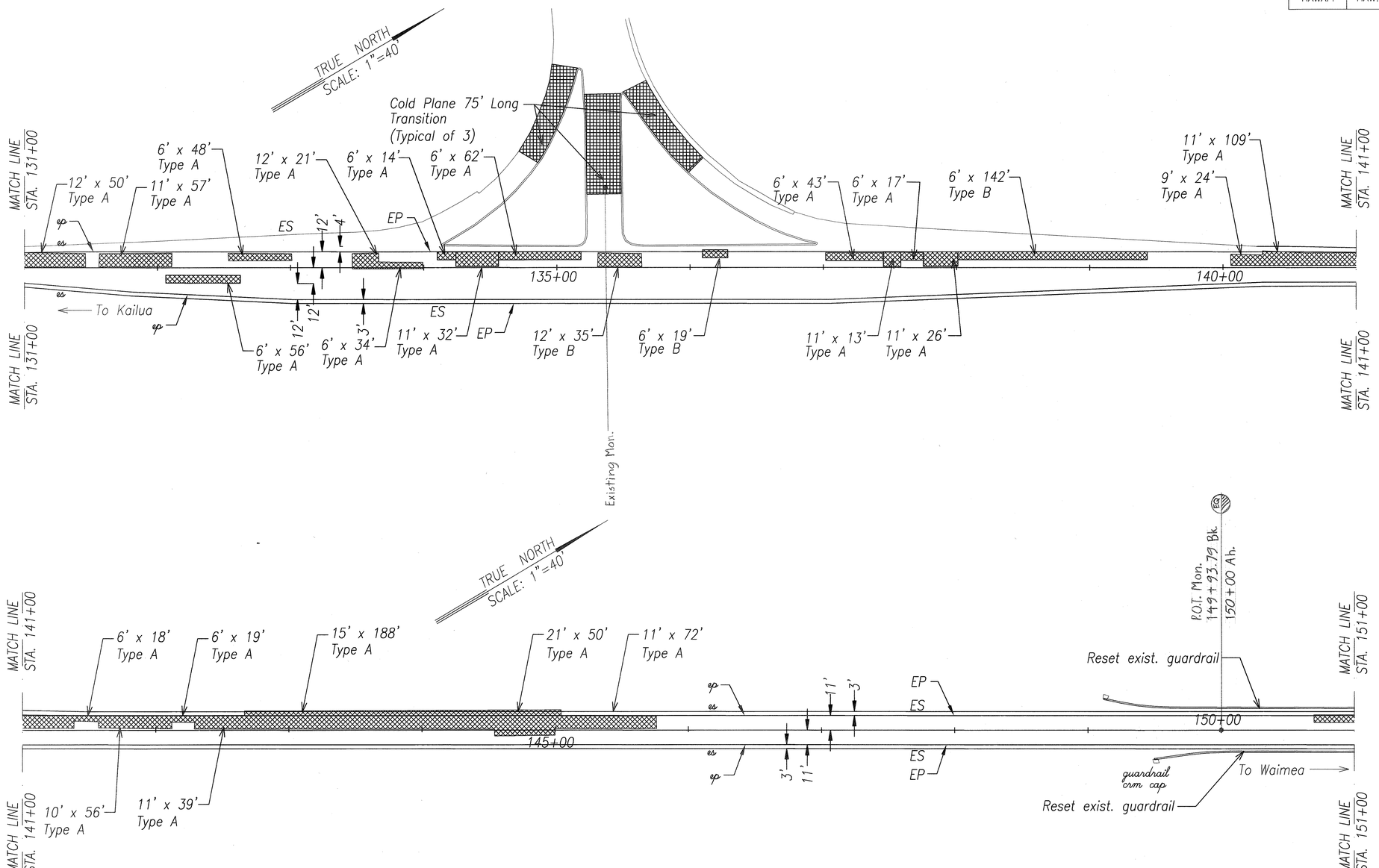

Date	Revisions
6/13/00	See note sheet No.20 Revised plan to show missing edge of shoulder at the Waikoloa Intersection.

STATE OF HAWAII
DEPARTMENT OF TRANSPORTATION
HIGHWAYS DIVISION

ROADWAY PLAN

ROUTE 190
HAWAII BELT ROAD RESURFACING
KEAMUKU TO PUUANAHULU
PROJECT NO. 190C-01-00M

Scale: Noted Date: April, 2000

SHEET No. 16 OF 19 SHEETS

ORIGINAL PLAN | SURVEY PLOTTED BY | DRAWN BY X.L. | TRACED BY | DESIGNED BY X | QUANTITIES BY | CHECKED BY | DATE X | NOTE BOOK No. Bookoff dgn

"AS-BUILT"

ADD. 35

FED. ROAD DIST. NO.	STATE	PROJ. NO.	FISCAL YEAR	SHEET NO.	TOTAL SHEETS
HAWAI'I	HAW.	190C-01-00M	2000	36	66

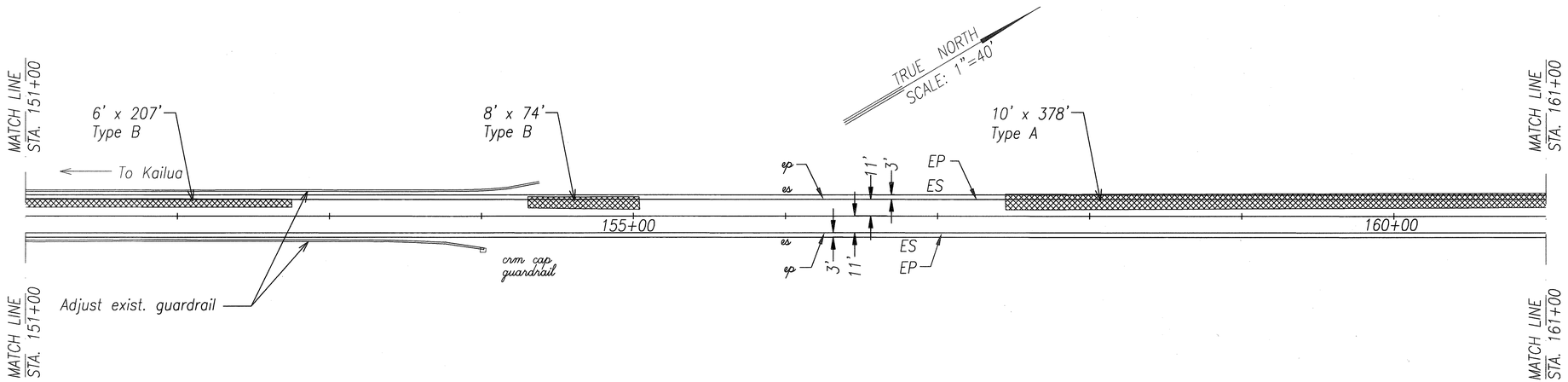

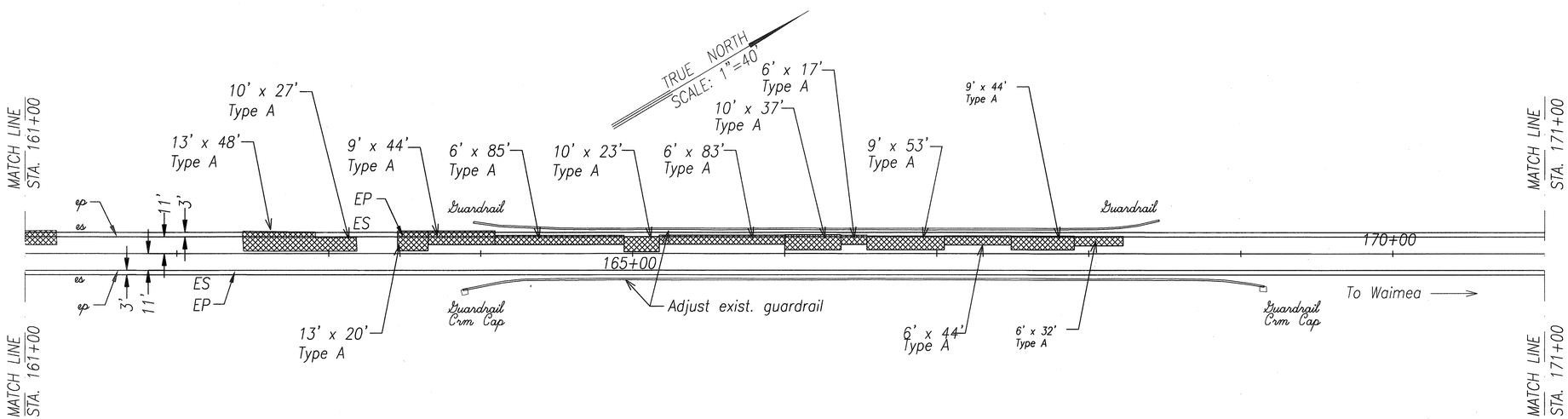

See note sheet No20

ORIGINAL PLAN	SURVEY PLOTTED BY	DATE
	DRAWN BY X	X
NOTE BOOK	TRACED BY X	
No. Deposit dgn	DESIGNED BY X	
	QUANTITIES BY X	
	CHECKED BY X	

STATE OF HAWAII
DEPARTMENT OF TRANSPORTATION
HIGHWAYS DIVISION

ROADWAY PLAN

ROUTE 190
HAWAII BELT ROAD RESURFACING
KEAMUKU TO PUUANAHULU
PROJECT NO. 190C-01-00M

Scale: Noted Date: April, 2000

SHEET No. 17 OF 19 SHEETS

"AS-BUILT"

FED. ROAD DIST. NO.	STATE	PROJ. NO.	FISCAL YEAR	SHEET NO.	TOTAL SHEETS
HAWAI'I	HAW.	190C-01-00M	2000	37	66

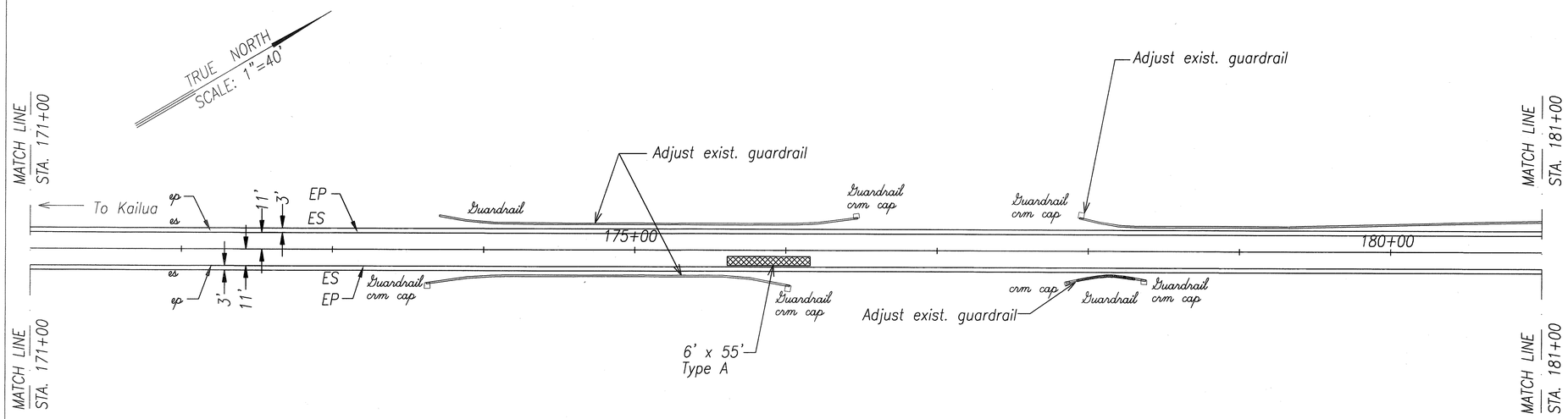

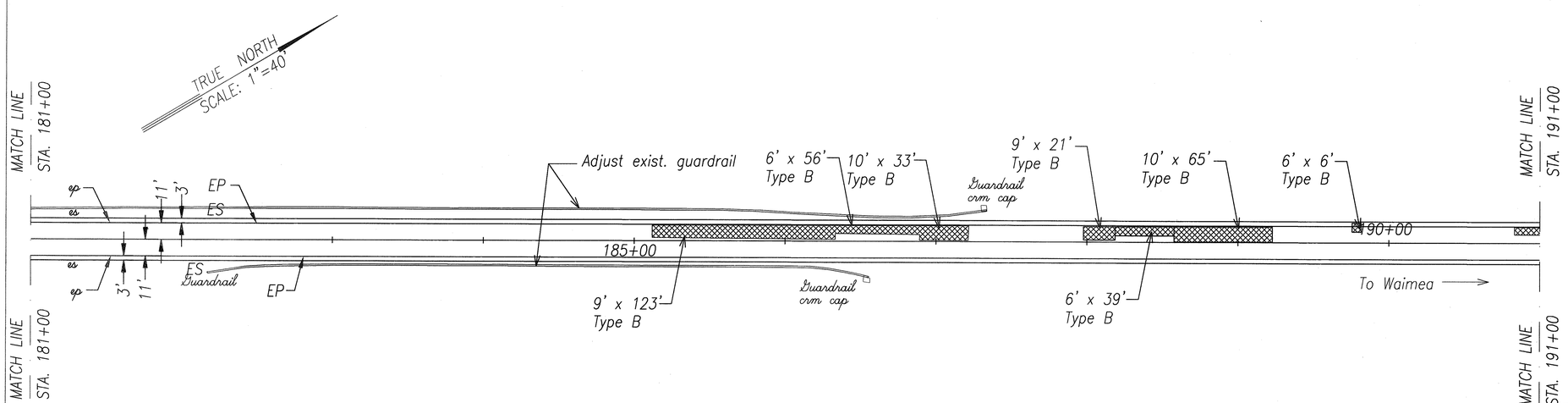

See note sheet No.20

ORIGINAL PLAN	SURVEY PLOTTED BY	DATE
	DRAWN BY X	
NOTE BOOK	TRACED BY	
	DESIGNED BY X	
No. bpkhab1 .dgn	QUANTITIES BY	
	CHECKED BY	

STATE OF HAWAII
DEPARTMENT OF TRANSPORTATION
HIGHWAYS DIVISION

ROADWAY PLAN

ROUTE 190
HAWAII BELT ROAD RESURFACING
KEAMUKU TO PUUANAHULU
PROJECT NO. 190C-01-00M

Scale: Noted Date: April, 2000

SHEET No. 18 OF 19 SHEETS

"AS-BUILT"

FED. ROAD DIST. NO.	STATE	PROJ. NO.	FISCAL YEAR	SHEET NO.	TOTAL SHEETS
HAWAI'I	HAW.	190C-01-00M	2000	38	66

END
ROAD WORK

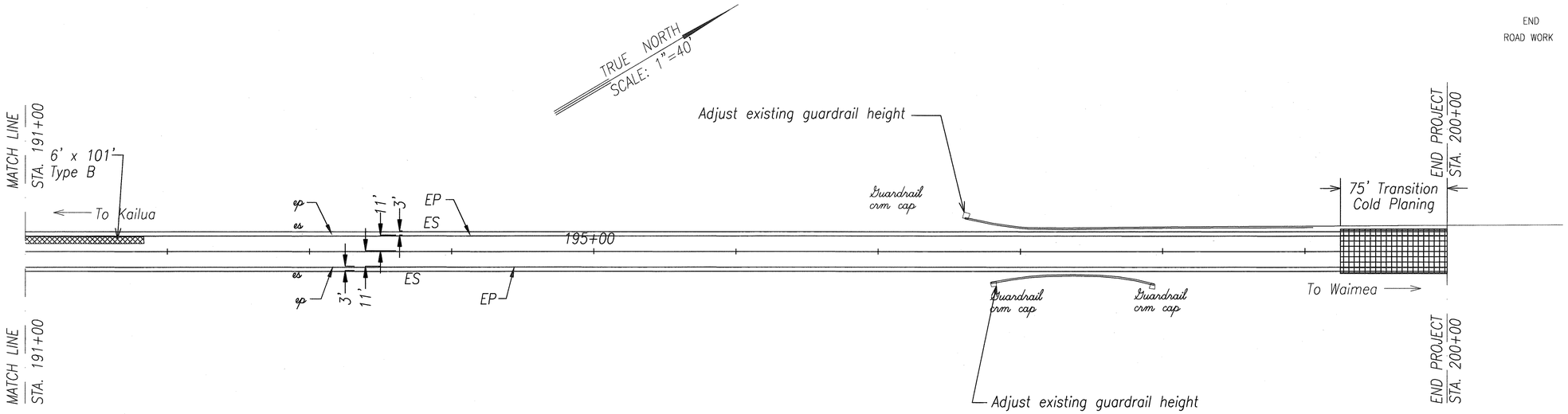

See note sheet No. 20

STATE OF HAWAII
DEPARTMENT OF TRANSPORTATION
HIGHWAYS DIVISION

ROADWAY PLAN

ROUTE 190
HAWAII BELT ROAD RESURFACING
KEAMUKU TO PUUANAHULU
PROJECT NO. 190C-01-00M

Scale: Noted Date: April, 2000

SHEET No. 19 OF 19 SHEETS

ORIGINAL PLAN	SURVEY PLOTTED BY	DATE X
	DRAWN BY X	
NOTE BOOK	TRACED BY X	
No. 00001	DESIGNED BY X	
No. dgn	QUANTITIES BY	
	CHECKED BY	

"AS-BUILT"