FED. ROAD DIST. NO.	STATE	FED. AID PROJ. NO.	FISCAL YEAR	SHEET NO.	TOTAL SHEETS
HAWAII	HAW.	HSIP-0190(018)	2022	ADD. 8	70

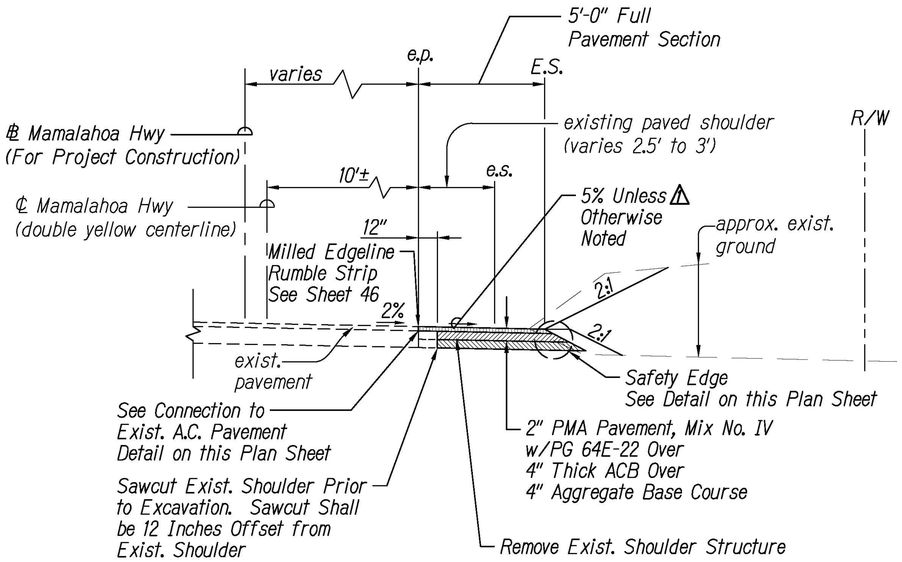

SECTION AT SHOULDER WIDENING

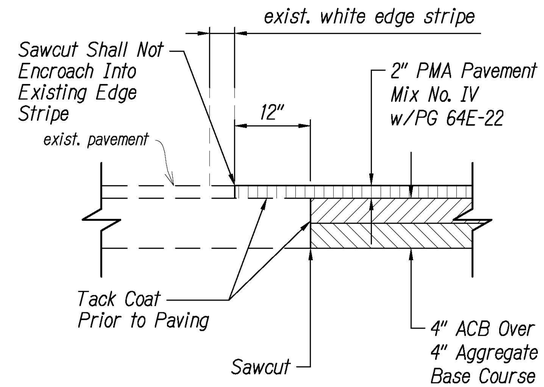

CONNECTION TO EXISTING A.C. PAVEMENT DETAIL

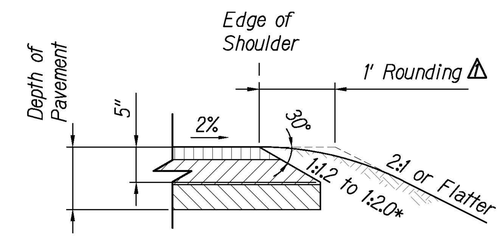

* Recommended Rise to Run Ratio. Range of Slope is Equal to 26° to 40°

SAFETY EDGE DETAIL

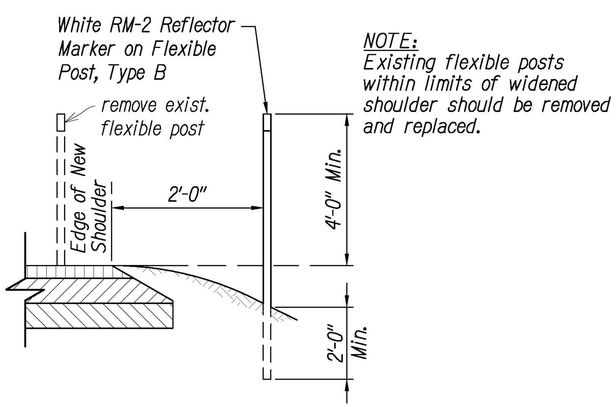

NOTE:
Existing flexible posts within limits of widened shoulder should be removed and replaced.

REFLECTOR MARKER MOUNTING DETAIL

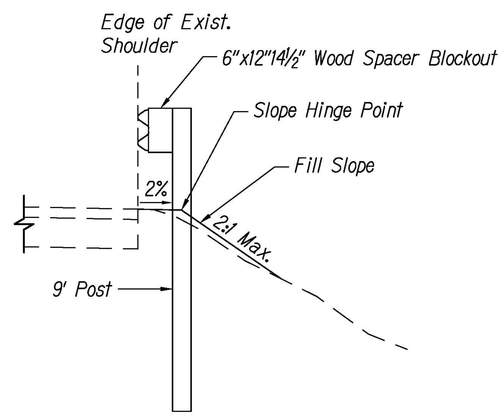

GUARDRAIL ON SLOPE

ORIGINAL PLAN	SURVEY PLOTTED BY	DATE
	DRAWN BY	"
	TRACED BY	"
NOTE BOOK	DESIGNED BY	"
	QUANTITIES BY	"
No.	CHECKED BY	"

NORMAN S.H. LEONG
Licensed Professional Engineer
No. 15285
HAWAII USA

This work was prepared by me or under my supervision and construction of this project will be under my observation.

Expiration Date of License 4/24

Date	Description
9/9/22	⚠ Revised Details

STATE OF HAWAII
DEPARTMENT OF TRANSPORTATION
HIGHWAYS DIVISION

TYPICAL SECTIONS AND DETAILS

MAMALAHOA HIGHWAY
SAFETY IMPROVEMENTS
East and West of Puuwaawaa Ranch
Federal Aid Project No. HSIP-0190(018)

Scale: NTS Date: July 2022

SHEET No. 1A OF 1 SHEETS

ADD. 8

FED. ROAD DIST. NO.	STATE	FED. AID PROJ. NO.	FISCAL YEAR	SHEET NO.	TOTAL SHEETS
HAWAII	HAW.	HSIP-0190(018)	2022	ADD. 10	70

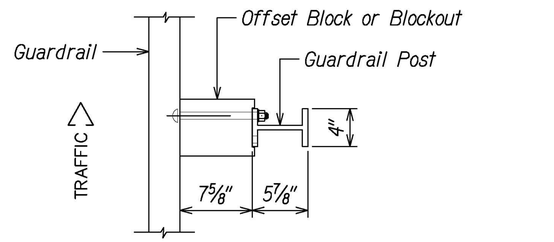

PLAN

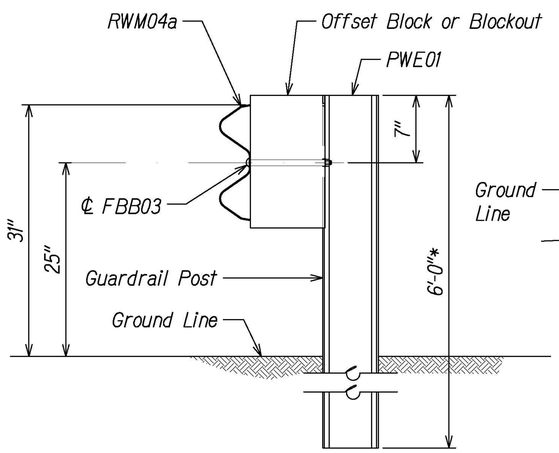

SECTION A-A

NOTE:
All Holes are ¾" Dia.

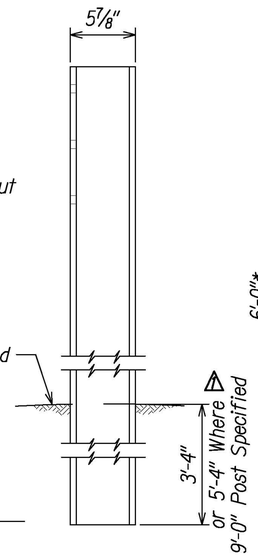

SIDE

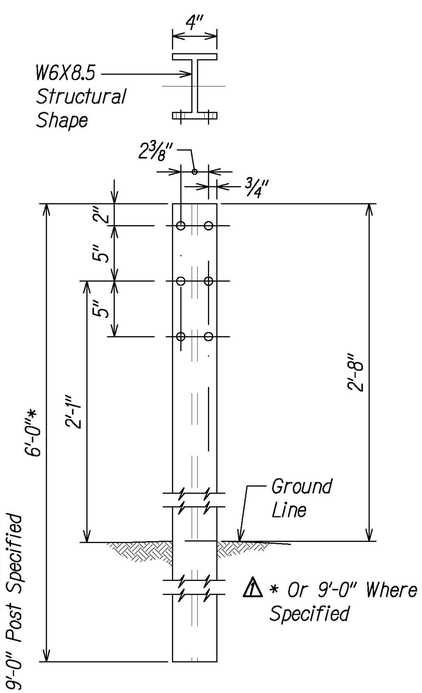

FRONT

WIDE-FLANGED GUARDRAIL POST (PWE01)

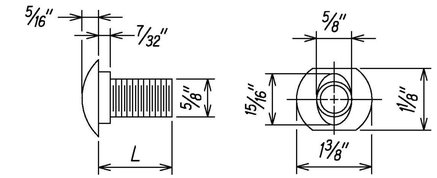

DESIGNATOR	L
FBB01	1⅜"
FBB02	2"
FBB03	10"

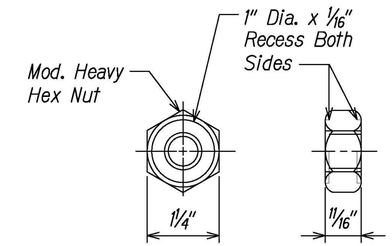

GUARDRAIL BOLTS AND RECESSED NUT

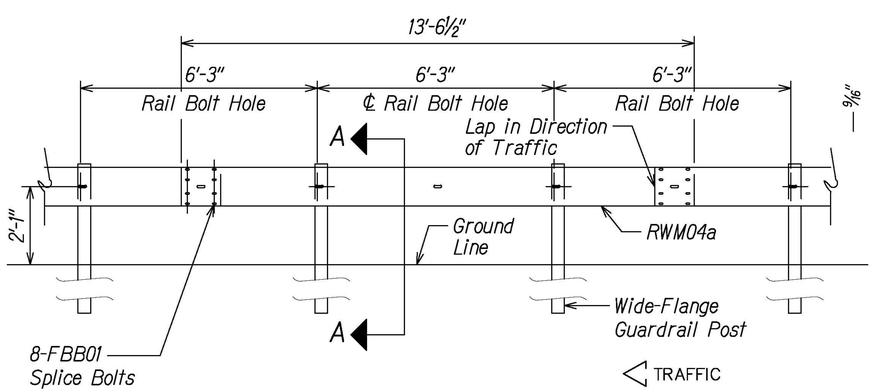

ELEVATION

MIDWEST GUARDRAIL SYSTEM WITH STANDARD 8" OFFSET BLOCK (SGR47)

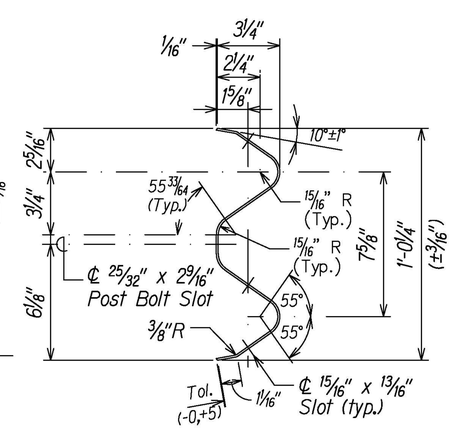

DESIGNATOR	BASE METAL THICKNESS
RWM04a	12 Gauge

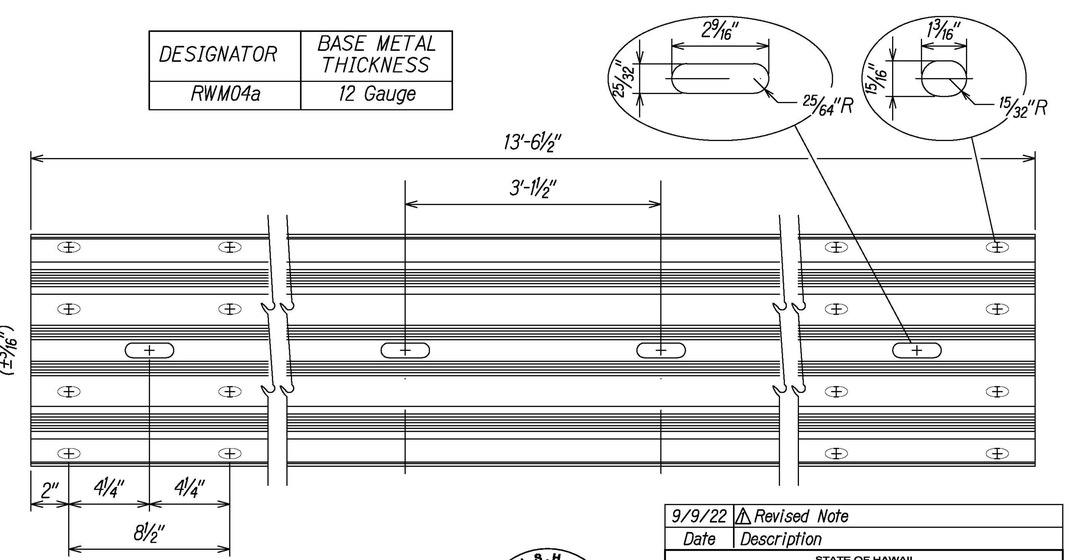

4 SPACE W-BEAM GUARDRAIL (RWM04a)

Date	Description
9/9/22	⚠ Revised Note

STATE OF HAWAII
DEPARTMENT OF TRANSPORTATION
HIGHWAYS DIVISION

MIDWEST GUARDRAIL SYSTEM
8" BLOCKOUT
MAMALAHOA HIGHWAY
SAFETY IMPROVEMENTS
East and West of Puuwaawaa Ranch
Federal Aid Project No. HSIP-0190(018)

Scale: NTS Date: July 2022

NORMAN S.H. LEONG Licensed Professional Engineer No. 15285 HAWAII USA

This work was prepared by me or under my supervision and construction of this project will be under my observation.

Expiration Date of License 4/24

SHEET No. 2A OF 7 SHEETS

ORIGINAL PLAN | SURVEY PLOTTED BY | DRAWN BY | TRACED BY | DESIGNED BY | QUANTITIES BY | CHECKED BY | DATE | NOTE BOOK | No.

ADD. 10

FED. ROAD DIST. NO.	STATE	FED. AID PROJ. NO.	FISCAL YEAR	SHEET NO.	TOTAL SHEETS
HAWAII	HAW.	HSIP-0190(018)	2022	ADD. 16	70

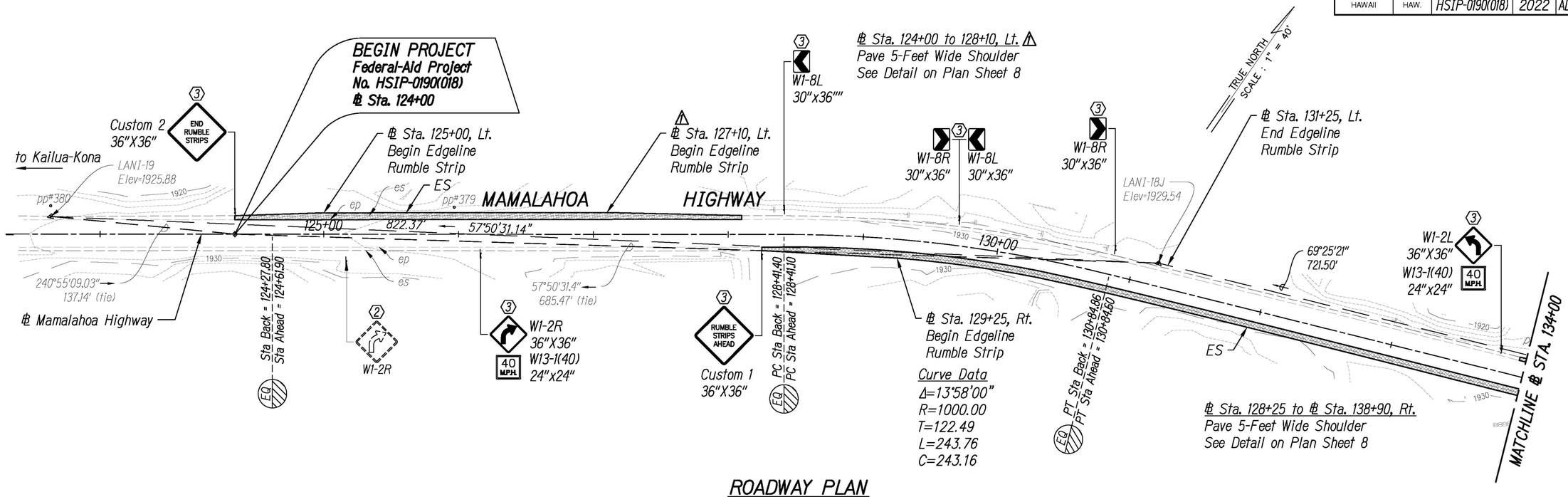

ROADWAY PLAN

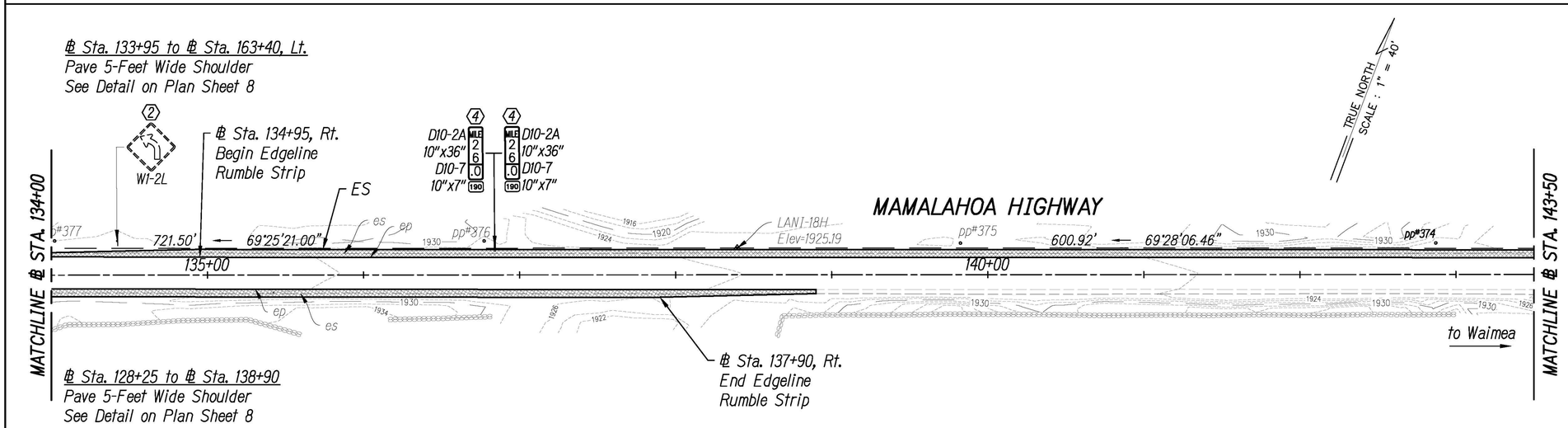

Legend:

Sawcut and Widen Exist. Shoulder
See Detail on Plan Sht. 8

Sign Key:

1. Existing Sign(s) & Post(s) to Remain
2. Remove Existing Sign(s) & Post(s)
3. Install New Sign(s) & Post(s)
4. Remove Existing Sign(s) & Post(s) & Install New Sign(s) & Post(s)

ROADWAY PLAN

1" = 40' 40' 0 40' 80'

NORMAN S.H. LEONG
Licensed Professional Engineer
No. 15285
HAWAII USA

This work was prepared by me or under my supervision and construction of this project will be under my observation.

Expiration Date of License 4/24

Date	Description
9/9/22	⚠ Revised Limits

STATE OF HAWAII
DEPARTMENT OF TRANSPORTATION
HIGHWAYS DIVISION

ROADWAY PLAN

MAMALAHOA HIGHWAY
SAFETY IMPROVEMENTS
East and West of Puuwaawaa Ranch
Federal Aid Project No. HSIP-0190(018)

Scale: 1"=40' Date: July 2022

SHEET No. 1A OF 21 SHEETS

ADD. 16

ORIGINAL PLAN
NOTE BOOK No.
SURVEY PLOTTED BY
DRAWN BY
TRACED BY
DESIGNED BY
QUANTITIES BY
CHECKED BY
DATE

FED. ROAD DIST. NO.	STATE	FED. AID PROJ. NO.	FISCAL YEAR	SHEET NO.	TOTAL SHEETS
HAWAII	HAW.	HSIP-0190(018)	2022	ADD. 18	70

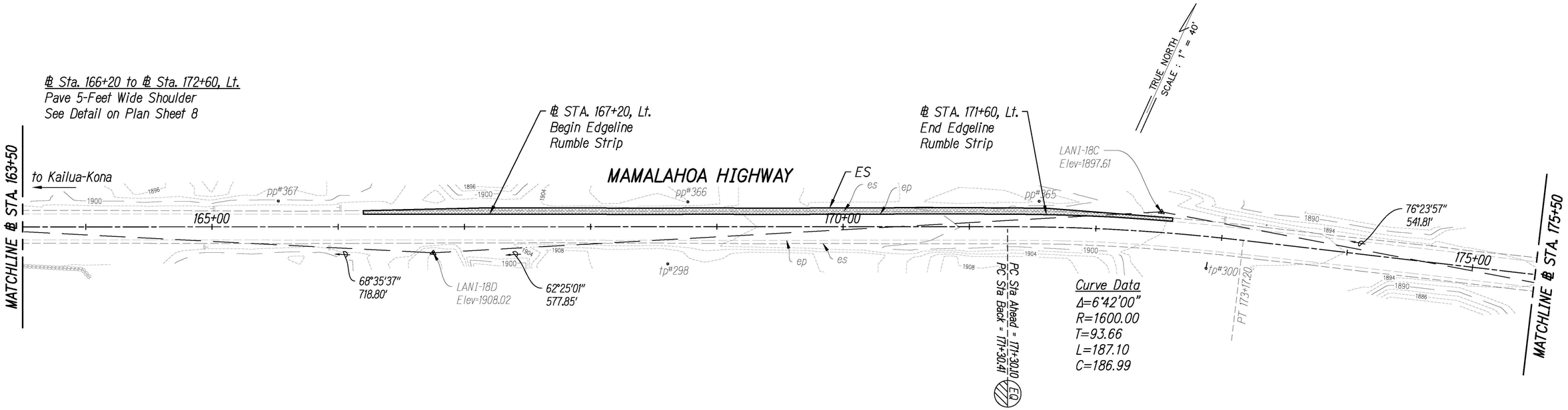

ROADWAY PLAN

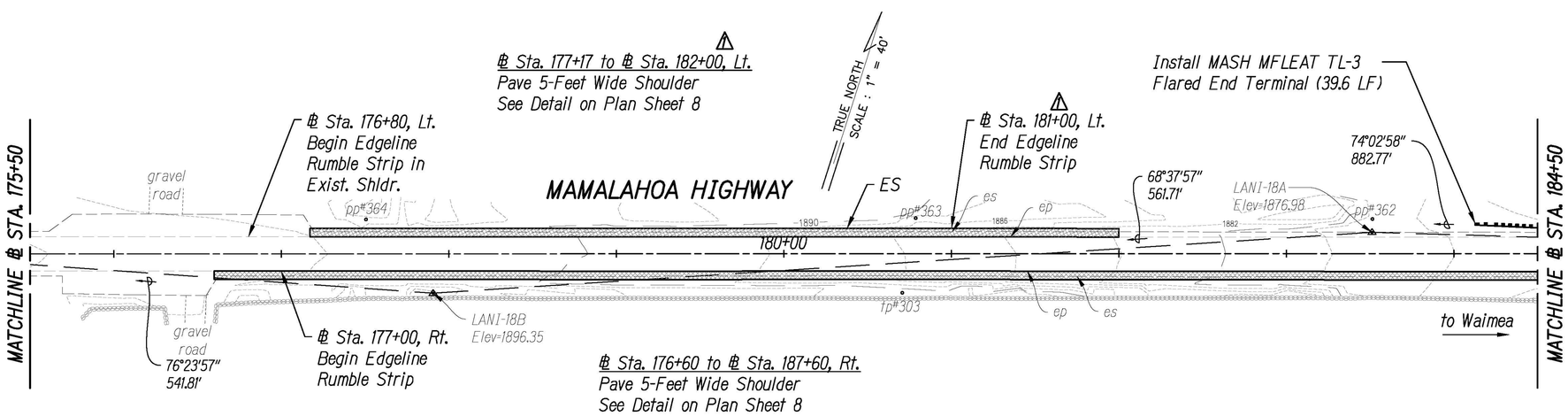

Legend:

Sawcut and Widen Exist. Shoulder
See Detail on Plan Sht. 8

Sign Key:

1. Existing Sign(s) & Post(s) to Remain
2. Remove Existing Sign(s) & Post(s)
3. Install New Sign(s) & Post(s)
4. Remove Existing Sign(s) & Post(s) & Install New Sign(s) & Post(s)

ROADWAY PLAN

1" = 40' 40' 0 40' 80'

NORMAN S.H. LEONG
Licensed Professional Engineer
No. 15285
HAWAII USA

This work was prepared by me or under my supervision and construction of this project will be under my observation.

Expiration Date of License 4/24

Date	Description
9/9/22	⚠ Revised Limits

STATE OF HAWAII
DEPARTMENT OF TRANSPORTATION
HIGHWAYS DIVISION

ROADWAY PLAN

MAMALAHOA HIGHWAY
SAFETY IMPROVEMENTS
East and West of Puuwaawaa Ranch
Federal Aid Project No. HSIP-0190(018)

Scale: 1"=40' Date: July 2022

SHEET No. 3A OF 21 SHEETS

ADD. 18

ORIGINAL PLAN
NOTE BOOK No.
SURVEY PLOTTED BY
DRAWN BY
TRACED BY
DESIGNED BY
QUANTITIES BY
CHECKED BY
DATE

FED. ROAD DIST. NO.	STATE	FED. AID PROJ. NO.	FISCAL YEAR	SHEET NO.	TOTAL SHEETS
HAWAII	HAW.	HSIP-0190(018)	2022	ADD. 24	70

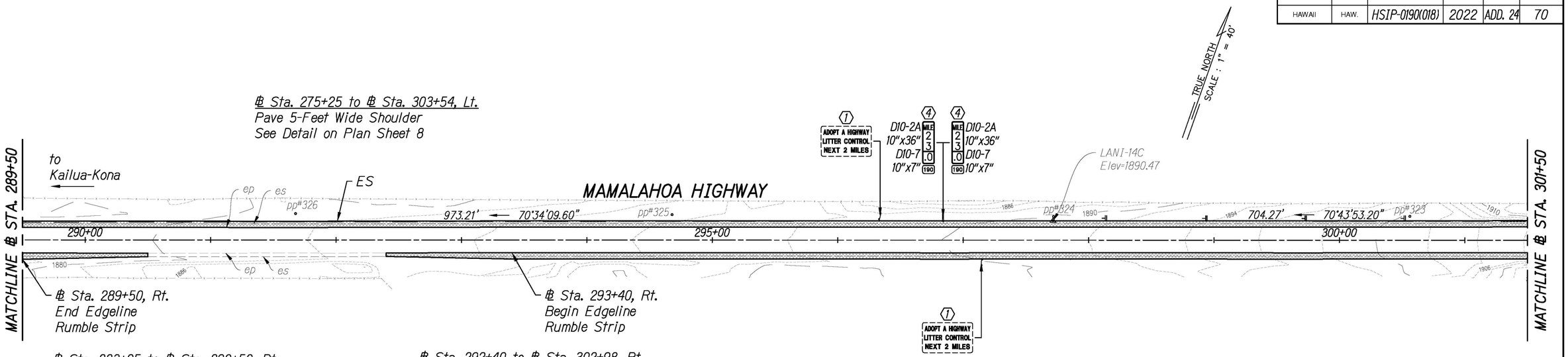

ROADWAY PLAN

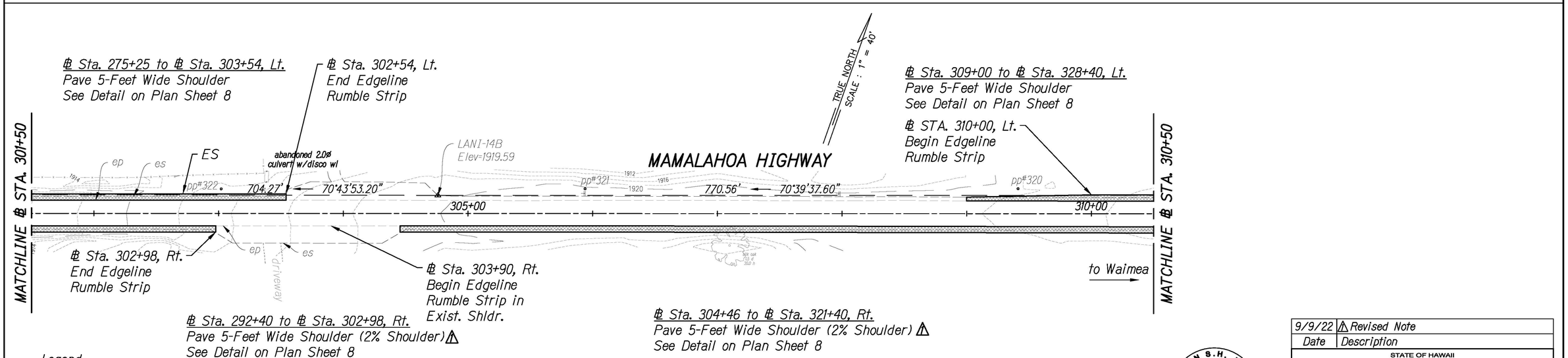

Legend:

Sawcut and Widen Exist. Shoulder
See Detail on Plan Sht. 8

Sign Key:

1. Existing Sign(s) & Post(s) to Remain
2. Remove Existing Sign(s) & Post(s)
3. Install New Sign(s) & Post(s)
4. Remove Existing Sign(s) & Post(s) & Install New Sign(s) & Post(s)

ROADWAY PLAN

1" = 40' 40' 0 40' 80'

NORMAN S.H. LEONG
Licensed Professional Engineer
No. 15285
HAWAII USA

This work was prepared by me or under my supervision and construction of this project will be under my observation.

Expiration Date of License 4/24

Date	Description
9/9/22	Revised Note

STATE OF HAWAII
DEPARTMENT OF TRANSPORTATION
HIGHWAYS DIVISION

ROADWAY PLAN

MAMALAHOA HIGHWAY
SAFETY IMPROVEMENTS
East and West of Puuwaawaa Ranch
Federal Aid Project No. HSIP-0190(018)

Scale: 1"=40' Date: July 2022

SHEET No. 9A OF 21 SHEETS

ADD. 24

ORIGINAL PLAN
NOTE BOOK No.
SURVEY PLOTTED BY
DRAWN BY
TRACED BY
DESIGNED BY
QUANTITIES BY
CHECKED BY
DATE

FED. ROAD DIST. NO.	STATE	FED. AID PROJ. NO.	FISCAL YEAR	SHEET NO.	TOTAL SHEETS
HAWAII	HAW.	HSIP-0190(018)	2022	ADD. 25	70

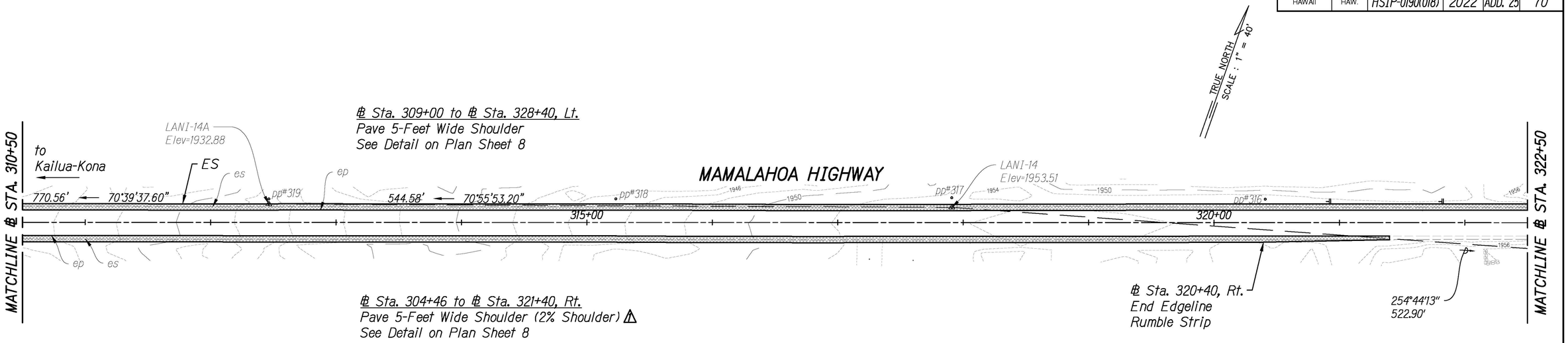

ROADWAY PLAN

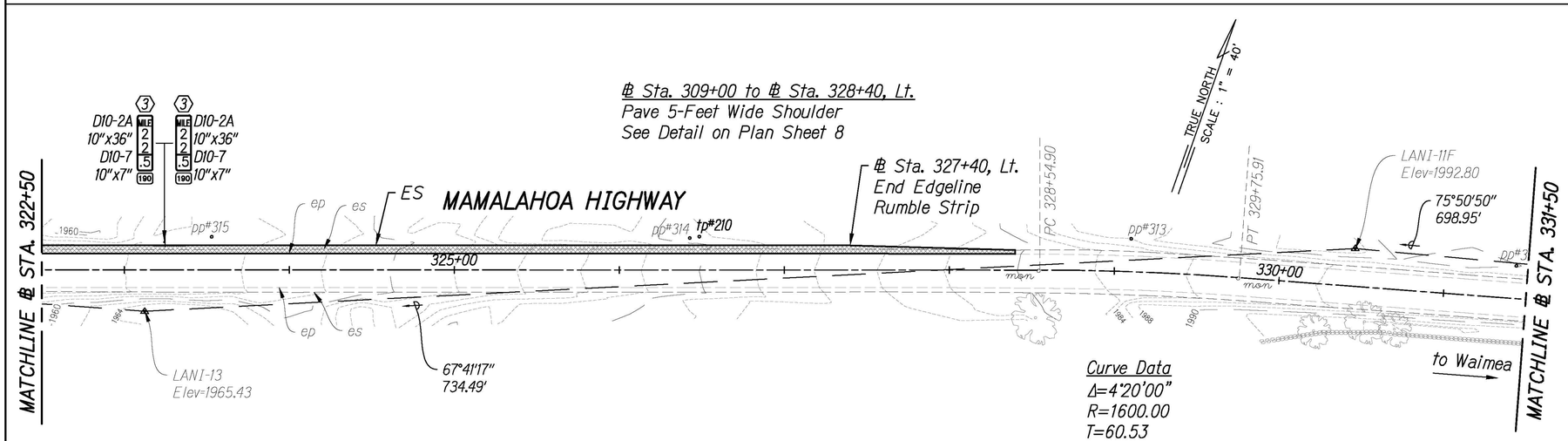

Curve Data
Δ=4°20'00"
R=1600.00
T=60.53
L=121.01
C=120.98

Legend:

Sawcut and Widen Exist. Shoulder
See Detail on Plan Sht. 8

Sign Key:

1. Existing Sign(s) & Post(s) to Remain
2. Remove Existing Sign(s) & Post(s)
3. Install New Sign(s) & Post(s)
4. Remove Existing Sign(s) & Post(s) & Install New Sign(s) & Post(s)

ROADWAY PLAN

1" = 40' 40' 0 40' 80'

NORMAN S.H. LEONG
Licensed Professional Engineer
No. 15285
HAWAII USA

This work was prepared by me or under my supervision and construction of this project will be under my observation.

Expiration Date of License 4/24

Date	Description
9/9/22	⚠ Revised Note

STATE OF HAWAII
DEPARTMENT OF TRANSPORTATION
HIGHWAYS DIVISION

ROADWAY PLAN

MAMALAHOA HIGHWAY
SAFETY IMPROVEMENTS
East and West of Puuwaawaa Ranch
Federal Aid Project No. HSIP-0190(018)

Scale: 1"=40' Date: July 2022

SHEET No. 10A OF 21 SHEETS

ADD. 25

ORIGINAL PLAN
NOTE BOOK No.
SURVEY PLOTTED BY
DRAWN BY
TRACED BY
DESIGNED BY
QUANTITIES BY
CHECKED BY
DATE

FED. ROAD DIST. NO.	STATE	FED. AID PROJ. NO.	FISCAL YEAR	SHEET NO.	TOTAL SHEETS
HAWAII	HAW.	HSIP-0190(018)	2022	ADD. 42	70

RUMBLE STRIP SCHEDULE SOUTH BOUND LANE

℄ STA. BEGIN	℄ STA. END	LENGTH (FT)
125+00	127+10 △1	210 △1
134+95	162+40	2,745
167+20	171+60	440
176+80	181+00 △1	420 △1
224+40	227+10	270
237+40	241+40	400
245+70	247+21	151
257+30	261+30	400
276+25	302+54	2,629
310+00	327+40	1,740
332+50	380+34	4,784
485+25	492+30	705
495+30	562+70	6,718

RUMBLE STRIP SCHEDULE NORTH BOUND LANE

℄ STA. BEGIN	℄ STA. END	LENGTH (FT)
129+25	137+90	865
144+70	147+10	240
154+20	159+20	500
177+00	186+60	960
196+40	199+90	350
207+75	216+15	840
220+15	222+40	225
225+40	229+30	390
257+60	261+50	390
267+17	272+40	523
284+25	289+50	525
293+40	302+98	958
303+90	320+40	1,650
343+00	351+48	848
361+50	373+16	1,166
374+16	380+34	618
487+20	504+00	1,680
510+30	530+20	1,990
535+25	557+50	2,203
Pay Item 615.0200 - Milled Edgeline Rumble Strip		38,534 LF △1

GUARDRAIL SECTIONS SCHEDULE

GUARDRAIL NO.	GUARDRAIL SECTION AND LENGTH				TOTAL LENGTH (LF)
	GUARDRAIL TYPE*	℄ STA. BEGIN	℄ STA. END	SECTION LENGTH (LF)	
1	6' POST	184+52	185+27	75	300
	9' POST	185+27	186+89.5	162.5	
	6' POST	186+89.5	187+52	62.5	
2	6' POST	248+71	250+33.5	162.5	450
	9' POST	250+33.5	252+33.5	200	
	6' POST	252+33.5	253+21	87.5	
3	6' POST	469+87.5	474+25	437.5	437.5

* 9' Guardrail Posts Shall be Used where Guardrail is Placed Adjacent to Slope as shown on Plan Sheet 8.

END TREATMENT SCHEDULE

GUARDRAIL NO.	LEADING END TREATMENT TYPE	LEADING END TREATMENT LENGTH (FT)	TRAILING END TREATMENT TYPE	TRAILING END TREATMENT LENGTH (FT)
1	SoftStop	50	MFLEAT	39
2	SoftStop	50	SoftStop	50
3	Modified Type A-1 Flare	75	SoftStop	50

GUARDRAIL PAY ITEMS AND QUANTITIES

ITEM NO.	DESCRIPTION	QTY.
606.3112	Guardrail Type - Midwest Guardrail System (6-ft Post)	825 LF
606.3113	Guardrail Type - Midwest Guardrail System (9-ft Post)	363 LF
606.3200	Transition Section Type - MGS to Strong Post	1 EA
606.7010	End Anchorage Type - MASH MFLEAT	1 EA
606.7020	End Anchorage Type - SoftStop	3 EA
606.7030	End Anchorage Type - Modified Type "A-1" Flare	1 EA

REFLECTOR MARKER SCHEDULE.

STA.	LEFT	RIGHT	STA.	LEFT	RIGHT	STA.	LEFT	RIGHT
△1 ~~128+34~~	~~x~~		266+02		x	346+65		x
~~128+81~~	~~x~~		279+52	x		347+64		x
~~129+31~~	~~x~~		280+52	x		348+64		x
~~129+81~~	~~x~~		281+52	x		349+62		x
~~130+30~~	~~x~~		282+51	x		361+87	x	
~~130+78~~	~~x~~		283+51	x		362+86	x	
144+88	x		284+51	x		372+78	x	
145+87	x		298+13	x		374+75	x	
146+77	x		298+93	x		375+74	x	
163+01	x		299+73	x		376+72	x	
197+89		x	300+52	x		377+72	x	
199+78		x	320+92	x		378+71	x	
223+95	x		321+82	x		491+74	x	
225+00	x		335+80	x		521+48	x	
227+52	x		336+80	x		522+81	x	
228+60		x	337+80	x		524+15	x	
229+50		x	338+80	x		534+42	x	
245+01	x		339+80	x		535+47	x	
248+37	x		340+72	x		553+55	x	
250+35	x		341+79	x		554+40	x	
251+35	x		342+78	x				
252+35	x		343+69		x			
257+10		x	343+78	x				
258+01	x		344+69		x			
258+09		x	344+79	x				
259+00	x		345+67		x			
259+11		x	345+79	x				
Pay Item 632.7000 - Reflector Marker with Type B Flexible Post - RM-2							68 EA △1	

ORIGINAL PLAN	SURVEY PLOTTED BY	DATE			
	DRAWN BY	"			
NOTE BOOK	TRACED BY	"			
	DESIGNED BY	"			
No.	QUANTITIES BY	"			
	CHECKED BY	"			

NORMAN S.H. LEONG
Licensed Professional Engineer
No. 15285
HAWAII USA

This work was prepared by me or under my supervision and construction of this project will be under my observation.

Expiration Date of License 4/24

Date	Description
9/9/22	△1 Revised Schedule

STATE OF HAWAII
DEPARTMENT OF TRANSPORTATION
HIGHWAYS DIVISION

MISCELLANEOUS SCHEDULES

MAMALAHOA HIGHWAY
SAFETY IMPROVEMENTS
East and West of Puuwaawaa Ranch
Federal Aid Project No. HSIP-0190(018)

Scale: NTS Date: July 2022

SHEET No. 1A OF 2 SHEETS

ADD. 42

FED. ROAD DIST. NO.	STATE	FED. AID PROJ. NO.	FISCAL YEAR	SHEET NO.	TOTAL SHEETS
HAWAII	HAW.	HSIP-0190(018)	2022	ADD. 43	70

STRIPING SCHEDULE
SOUTH BOUND LANE

℄ STA. BEGIN	℄ STA. END	LENGTH OF 6" SINGLE WHITE EDGE LINE (FT)
124+00	128+10 △1	376 △1
133+95	163+40	2,945
166+20	172+60	640
176+80	182+00 △1	520 △1
223+40	228+10	470
236+40	242+40	600
244+70	248+21	351
256+30	262+30	600
275+25	303+54	2,829
309+00	328+40	1,940
331+50	380+76	4,926
484+25	493+30	905
494+30	563+70	6,918

STRIPING SCHEDULE
NORTH BOUND LANE

℄ STA. BEGIN	℄ STA. END	LENGTH OF 6" SINGLE WHITE EDGE LINE (FT)
128+25	138+90	1,065
143+70	148+10	440
153+20	160+20	700
176+60	187+60	1,100
195+40	200+90	550
206+75	217+15	1,040
219+15	223+40	425
224+40	230+30	590
256+60	262+50	590
265+75	273+40	765
283+25	290+50	725
292+40	302+98	1,058
303+90	321+40	1,750
342+00	351+51	951
360+50	373+16	1,266
373+92	380+87	695
486+20	505+00	1,880
509+30	531+20	2,190
534+25	558+50	2,403
Pay Item 629.0405 - Single White 6-Inch Pavement Striping (Thermoplastic Extrusion)		39,312 LF △1

SHOULDER WIDENING SCHEDULE
SOUTH BOUND LANE

℄ STA. BEGIN	℄ STA. END	LENGTH
124+00	128+10 △1	376 △1
133+95	163+40	2,945
166+20	172+60	640
177+17	182+00 △1	483 △1
223+40	228+10	470
236+40	242+40	600
244+70	248+21	351
256+30	262+30	600
275+25	303+54	2,829
309+00	328+40	1,940
331+50	380+76	4,926
484+25	493+30	905
494+30	515+37	2,107
516+29	551+87	3536
553+28	563+70	1,042

SHOULDER WIDENING SCHEDULE
NORTH BOUND LANE

℄ STA. BEGIN	℄ STA. END	LENGTH
128+25	138+90	1,065
143+70	148+10	440
153+20	160+20	700
176+60	187+60	1,100
195+40	200+90	550
206+75	217+15	1,040
219+15	223+40	425
224+40	230+30	590
256+60	262+50	590
265+75	273+40	765
283+25	290+50	725
292+40	302+98	1,058
304+46	321+40	1,694
342+00	351+51	951
360+50	372+97	1,247
373+92	380+87	695
486+20	505+00	1,880
509+30	531+20	2,190
534+25	558+50	2,403
Roadway Shoulder Widening Subtotal		43,859 LF △1

ORIGINAL PLAN	SURVEY PLOTTED BY	DATE
	DRAWN BY	
	TRACED BY	
NOTE BOOK	DESIGNED BY	
	QUANTITIES BY	
No.	CHECKED BY	

NORMAN S.H. LEONG
Licensed Professional Engineer
No. 15285
HAWAII USA

This work was prepared by me or under my supervision and construction of this project will be under my observation.

Expiration Date of License 4/24

Date	Description
9/9/22	△1 Revised Schedule

STATE OF HAWAII
DEPARTMENT OF TRANSPORTATION
HIGHWAYS DIVISION

MISCELLANEOUS SCHEDULES

MAMALAHOA HIGHWAY
SAFETY IMPROVEMENTS
East and West of Puuwaawaa Ranch
Federal Aid Project No. HSIP-0190(018)

Scale: NTS Date: July 2022

SHEET No. 2A OF 2 SHEETS

ADD. 43