FED. ROAD DIST. NO.	STATE	FED. AID PROJ. NO.	FISCAL YEAR	SHEET NO.	TOTAL SHEETS
HAWAII	HAW.	BR-0190(13)	1999	8	75

INDEX TO DRAWINGS

GENERAL NOTES

GENERAL SPECIFICATIONS:

State of Hawaii, Department of Transportation Standard Specifications for Road and Bridge Construction, 1994 and Special Provisions.

DESIGN SPECIFICATIONS:

AASHTO LRFD Bridge Design Specifications, First Edition, including 1996 and 1997 Interim Revisions.

DESIGN LOADS:

A. Dead Load: A 20 p.s.f. allowance for future wearing surface of asphalt concrete has been included in dead load calculations. Concrete unit weight of 160 p.c.f. has been used for dead load calculations.

B. Live Load: HL-93

C. Seismic Loads: Seismic Zone = 4, Acceleration = 0.40

MATERIALS:

A. All structural concrete shall have the following class designations:

Item No.	Structural Item	Classes of Concrete	Specified Compressive Strength, f'_c(28 days)
1	Abutment Walls and Footings	-	4,000 p.s.i.
2	Bridge Decks and Beams	-	4,000 p.s.i.
3	Prestressed Girders	-	6,000 p.s.i.
4	All Others except as noted otherwise	A	-

B. All reinforcing steel shall conform to the requirements of ASTM A 615 and shall be deformed, Grade 60 unless noted otherwise.

C. Welding electrodes for structural steel shall be E 70.

D. Welding electrodes for stainless steel shall be E 316.

E. Elastomeric Bearing Pads shall be of 60 ±5 hardness unless noted otherwise.

F. ASTM A 325 Type I and A 307 anchor bolts, nuts, washers, structural steel shapes and plates shall be hot-dip galvanized after fabrication, unless noted otherwise.

G. For materials of prestressed concrete girders, see applicable prestressed concrete notes.

H. The minimum covering measured from the surface of the concrete to the face of any reinforcing bar shall be as follows, except as noted otherwise:

1. Deck Slabs
   a. Top Bars -- 2"
   b. Bottom Bars -- 1¼" except as noted otherwise
2. Prestressed Girders -- See Prestressed Concrete Girder Details
3. Abutments and Wingwalls -- 2"
4. Concrete cast against earth -- 3"

I. All reinforcement bars shown with bends shall conform to standard ACI hooks unless otherwise noted.

J. Reinforcing bars shall be detailed according to the latest edition of the A.C.I. Manual of Standard Practice for Detailing Reinforced Concrete Highway Structures unless noted otherwise.

K. All dimensions relating to reinforcing bars (e.g. spacing of bars, etc.) are to centers of bars unless noted otherwise.

L. For concrete finish, see Standard Specifications.

CONSTRUCTION REQUIREMENTS:

A. Refer to Hawaii Standard Specifications for Road, Bridge and Public Works Construction, (Hawaii 1994 edition and Special Provisions).

B. Exact location of bars shall be arranged so that no interference will occur between vertical reinforcement and horizontal foundation reinforcement.

C. Except as noted otherwise, all vertical dimensions are measured plumb.

D. The Contractor shall verify all site conditions and not rely upon these plans for access road or stream location, etc. Conditions may differ from those shown due to work performed by other contracts.

E. The Contractor shall submit shop drawings for construction of falsework, cofferdams or other obstructions required for construction.

F. Girder concrete seats receiving elastomeric pads, hinge blocks and creep blocks shall be poured monolithically with the supporting structure. Top of concrete seats shall be finished with a steel trowel to a smooth level surface to the elevation shown on the plans. All points on the surface shall be level to within 1/16 inch. The bottoms of elastomeric bearing pads shall be fastened with adhesives.

G. In general, top of concrete deck slab shall be constructed to follow the finish roadway vertical and horizontal curves and grades.

H. Abutment walls shall be backfilled before girders are placed.

GENERAL:

A. Refer to Standard Plans for additional details and notes not covered by details and typical drawings.

B. All items noted incidental will not be paid for separately.

C. The Contractor shall verify all grades and dimensions before commencing with any work.

D. The Contractor shall verify the locations of all utility lines near the bridge and notify their respective owners before commencing work of excavation.

E. Any damage to utility lines that are caused by the Contractor shall be repaired at his expense at no cost to the State.

F. Construction joints shall be located as shown on the Plans unless noted otherwise.

G. Unless noted otherwise, all exposed concrete edges shall be chamfered ¾".

H. In the event of over-excavation, the space between the footing and the ground shall be filled with a minimum of Class D concrete at the Contractor's expense at no cost to the State.

ORIGINAL PLAN	SURVEY PLOTTED BY	KSG	DATE JUN 1998
	DRAWN BY	"	"
	TRACED BY	KSG	"
NOTE BOOK	DESIGNED BY	JWW	JUN 1998
	TRACED BY	"	"
	QUANTITIES BY	JWW	JUN 1998
N/A	CHECKED BY	PDO	JUN 1998

STATE OF HAWAII
DEPARTMENT OF TRANSPORTATION
HIGHWAYS DIVISION

POPOO AND AUWAIAKEAKUA STREAM BRIDGES
INDEX TO DRAWINGS, GENERAL NOTES

HAWAII BELT ROAD
Replacement of Auwaiakeakua Bridge and Popoo Bridge
Fed. Aid Proj. No. BR-0190(13)

Scale: As Noted — Date: Jul, 1998

SHEET No. S1 OF 41 SHEETS

FED. ROAD DIST. NO.	STATE	FED. AID PROJ. NO.	FISCAL YEAR	SHEET NO.	TOTAL SHEETS
HAWAII	HAW.	BR-0190(13)	1999	9	75

SYMBOLS AND ABBREVIATIONS

Detail or Section designation — XXX
Sheet No. Section is cut or Detail Location — XXX|XXX — Sheet No. Detail is drawn

(XX) - ℄ Bearing Abutment Seat Line

◐ - Boring No. ∢ Designation

Abut.	Abutment
AC	Asphaltic Concrete
Adj.	Adjacent
Alt.	Alternate
Approx.	Approximate
Az.	Azimuth
℄	Baseline
Bal.	Balance
Bet., Btwn.	Between
B.F.	Both faces
B.F.E.	Bottom Footing Elevation
Bk.	Back
Blt.	Bolt
Bm.	Beam
B, Bot., Bott.	Bottom
Br.	Bridge
Brg., Brgs.	Bearing, Bearings
B.V.C.	Beginning of Vertical Curve
℄	Center Line
Cant.	Cantilever
C.F.	Cubic Feet
CIP	Cast in Place
C.I.P.	Cast Iron Pipe
Cl., Clr.	Clear
Col.	Column
Conc.	Concrete
Conn.	Connection
Const.	Construction
Cont.	Continuous
CRM	Cement Rubble Masonry
C.Y., Cu. Yd.	Cubic Yards
Det.	Detail
Dia., ø	Diameter
Dim.	Dimension
Dwg., Dwgs.	Drawing, Drawings
EA, Ea., ea.	Each
E.F.	Each Face
Elec.	Electrical
El., Elev.	Elevation
Emb.	Embankment
E.P.	Edge of Pavement
Eq.	Equal
Est.	Estimated
E.W.	Each Way
Exc.	Excavation
Exist.	Existing
Exp., (E)	Expansion
Ext.	Exterior
(F)	Fixed
F'_c	Specified Strength of Concrete
F'_{ci}	Strength of Concrete at Time of Initial Prestress
F.F.	Front Face
Fig.	Figure
Fin.	Finish
Fin. Gr.	Finish Grade
Ftg.	Footing
Ga.	Gage, Gauge
Galv.	Galvanized
Gir., G	Girder
G.R.P.	Grouted Rubble Paving
Gr.	Grade
Grd.	Ground
(H)	Hinge
Horiz.	Horizontal
HS	High Strength
Ht.	Height
Hwy.	Highway
I.B.	Inbound
I.F.	Inside Face
In.	Inch
Int.	Interior
Inv.	Invert
Jt.	Joint
L	Length
LBS., lb., lbs.	Pound, Pounds
L.F., Lin. Ft.	Linear Feet
Lg.	Long
Longit.	Longitudinal
L.S.	Lump Sum
Lt.	Left
Ltg. Std.	Lighting Standard
Max.	Maximum
Mech.	Mechanical
Min.	Minimum
Misc.	Miscellaneous
N	North
N.B.	Northbound
N.F.	Near Face
No., #	Number
N.T.S.	Not To Scale
O.B.	Outbound
o.c.	On Center
O.G.	Outside Girder
Opn'g	Opening
o/s, O/S	Offset
P.B.	Pull Box
P.C.	Point of Curvature
P.C.C.	Portland Cement Concrete
Perf.	Perforated
PG-( )	Prestressed Girder-(Type)
PL	Plate
P/S	Prestressed Strands
Pvmt.	Pavement
R	Radius
Rdwy	Roadway
Ref.	Reference
Reinf.	Reinforcement
Ret.	Retaining
Req'd	Required
R.F.	Rear Face
Rt.	Right
R/W	Right Of Way
S	South
S.B.	Southbound
Sect.	Section
SF	Square Feet
Shldr.	Shoulder
Sht.	Sheet
Spc.	Space
Spcd.	Spaced
Spcg.	Spacing
Spec.	Specification
Sprd.	Spread
Sta.	Station
Std.	Standard
Stirr.	Stirrup
Str.	Straight
Struct.	Structural
Symm.	Symmetrical
T	Top
Temp.	Temporary
Thk.	Thick, Thickness
T.O.D.	Top Of Deck
Tot.	Total
Transv.	Transverse
Typ.	Typical
Var.	Varies
V.C.	Vertical Curve
Vert.	Vertical
W	West
w/	With
W.W.	Wingwall

ESTIMATED QUANTITIES

ITEM NO.	ITEM DESCRIPTION	UNIT	QUANTITY
202.0440	Partial Removal of Existing Bridge Structures	Lump Sum	(2 ea.)
206.6000	Structure Excavation for Bridge Abutments and Wingwalls	C.Y.	6,300
206.7200	Structure Backfill for Bridge Abutments and Wingwalls	C.Y.	3,700
206.8000	Filter Material	C.Y.	250
503.1090	Concrete In Bridges (Except Footings and Approach Slabs)	Lump Sum	(1,300 C.Y.)
503.1091	Concrete In Bridge Footings	Lump Sum	(630 C.Y.)
503.1910	Concrete In Approach Slabs	Lump Sum	(230 C.Y.)
504.6100	Keehi Type VI Prestressed Concrete Girders	Lump Sum	(1,587 Lin. Ft.)
507.0100	Metal Bridge Railing - Bikeway Metal Railing	Lin. Ft.	505
507.7000	Concrete Bridge Parapet, Including End Posts	Lin. Ft.	761
602.0090	Reinforcing Steel	Lump Sum	(480,000 lbs.)
606.3221	Guardrail Type 3 Thrie Beam	Lin. Ft.	216

ORIGINAL PLAN	SURVEY PLOTTED BY KSS	DATE JUN 1998
	DRAWN BY	
NOTE BOOK	TRACED BY JW	JUN 1998
	DESIGNED BY WW	JUN 1998
	QUANTITIES BY WW	JUN 1998
NBI 0000000	CHECKED BY CCO	JUN 1998

STATE OF HAWAII
DEPARTMENT OF TRANSPORTATION
HIGHWAYS DIVISION

POPOO AND AUWAIAKEAKUA STREAM BRIDGE
SYMBOLS AND ABBREVIATIONS
AND ESTIMATED QUANTITIES
HAWAII BELT ROAD
Replacement of Auwaiakeakua Bridge and Popoo Bridge
Fed. Aid Proj. No. BR-0190(13)

Scale: As Noted — Date: Jul, 1998

SHEET No. 52 OF 41 SHEETS

FED. ROAD DIST. NO.	STATE	FED. AID PROJ. NO.	FISCAL YEAR	SHEET NO.	TOTAL SHEETS
HAWAII	HAW.	BR-0190(13)	1999	10	75

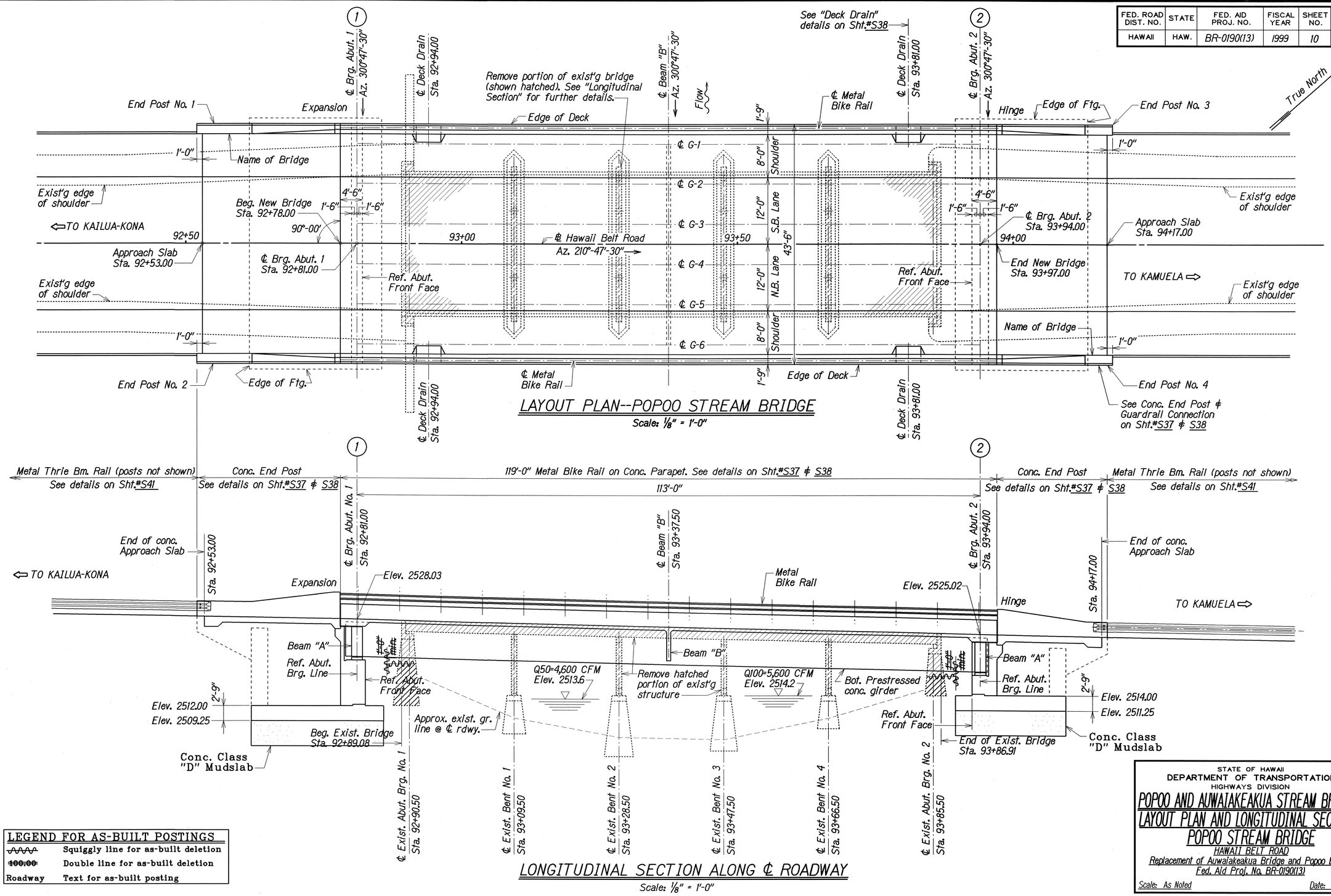

ORIGINAL PLAN	SURVEY PLOTTED BY KSG	DATE JUN 1998
NOTE BOOK N-00000-S3.00	DRAWN BY	
	TRACED BY JWW	JUN 1998
	DESIGNED BY JWW	JUN 1998
	QUANTITIES BY VCO	JUN 1998
	CHECKED BY	

LEGEND FOR AS-BUILT POSTINGS

∧∧∧∧	Squiggly line for as-built deletion
~~100.00~~	Double line for as-built deletion
Roadway	Text for as-built posting

STATE OF HAWAII
DEPARTMENT OF TRANSPORTATION
HIGHWAYS DIVISION

POPOO AND AUWAIAKEAKUA STREAM BRIDGES
LAYOUT PLAN AND LONGITUDINAL SECTION-POPOO STREAM BRIDGE

HAWAII BELT ROAD
Replacement of Auwaiakeakua Bridge and Popoo Bridge
Fed. Aid Proj. No. BR-0190(13)

Scale: As Noted — Date: Jul. 1998

SHEET No. S3 OF 41 SHEETS

"AS-BUILT"

FED. ROAD DIST. NO.	STATE	FED. AID PROJ. NO.	FISCAL YEAR	SHEET NO.	TOTAL SHEETS
HAWAII	HAW.	BR-0190(13)	1999	11	75

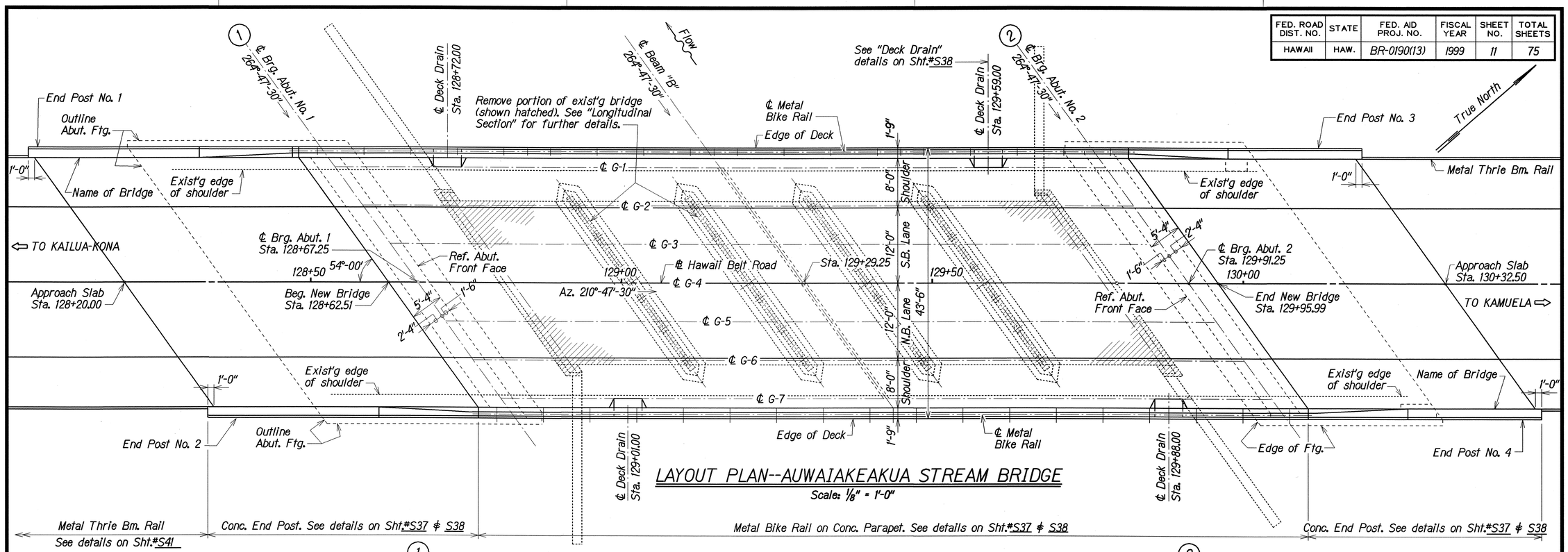

LAYOUT PLAN--AUWAIAKEAKUA STREAM BRIDGE

Scale: 1/8" = 1'-0"

LONGITUDINAL SECTION ALONG ℄ ROADWAY

Scale: 1/8" = 1'-0"

LEGEND FOR AS-BUILT POSTINGS	
~~	Squiggly line for as-built deletion
~~100.00~~	Double line for as-built deletion
Roadway	Text for as-built posting

ORIGINAL PLAN	SURVEY PLOTTED BY	KSC	DATE JUN 1998
	DRAWN BY		
NOTE BOOK	TRACED BY	WW	JUN 1998
	DESIGNED BY	WW	JUN 1998
SP0000_S4.dgn	QUANTITIES BY	CCO	JUN 1998
	CHECKED BY	DT	JUN 1998

STATE OF HAWAII
DEPARTMENT OF TRANSPORTATION
HIGHWAYS DIVISION

POPOO AND AUWAIAKEAKUA STREAM BRIDGES
LAYOUT PLAN AND LONGITUDINAL SECTION
AUWAIAKEAKUA STREAM BRIDGE

HAWAII BELT ROAD
Replacement of Auwaiakeakua Bridge and Popoo Bridge
Fed. Aid Proj. No. BR-0190(13)

Scale: As Noted — Date: Jul, 1998

SHEET No. S4 OF 41 SHEETS

"AS-BUILT"

FED. ROAD DIST. NO.	STATE	FED. AID PROJ. NO.	FISCAL YEAR	SHEET NO.	TOTAL SHEETS
HAWAII	HAW.	BR-0190(13)	1999	12	75

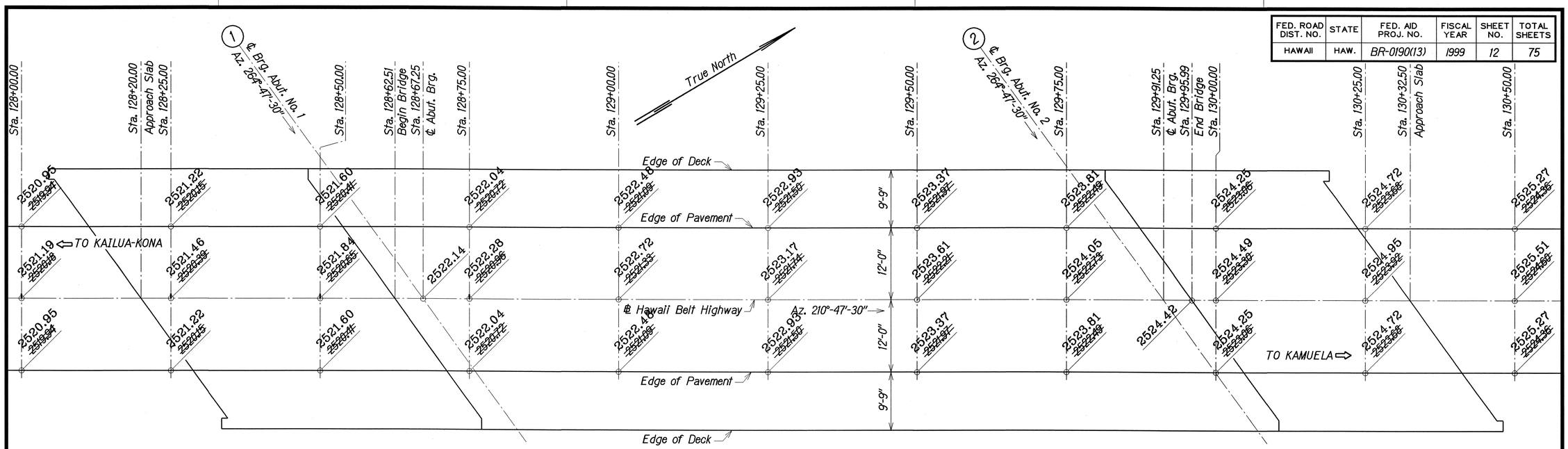

AUWAIAKEAKUA STREAM BRIDGE

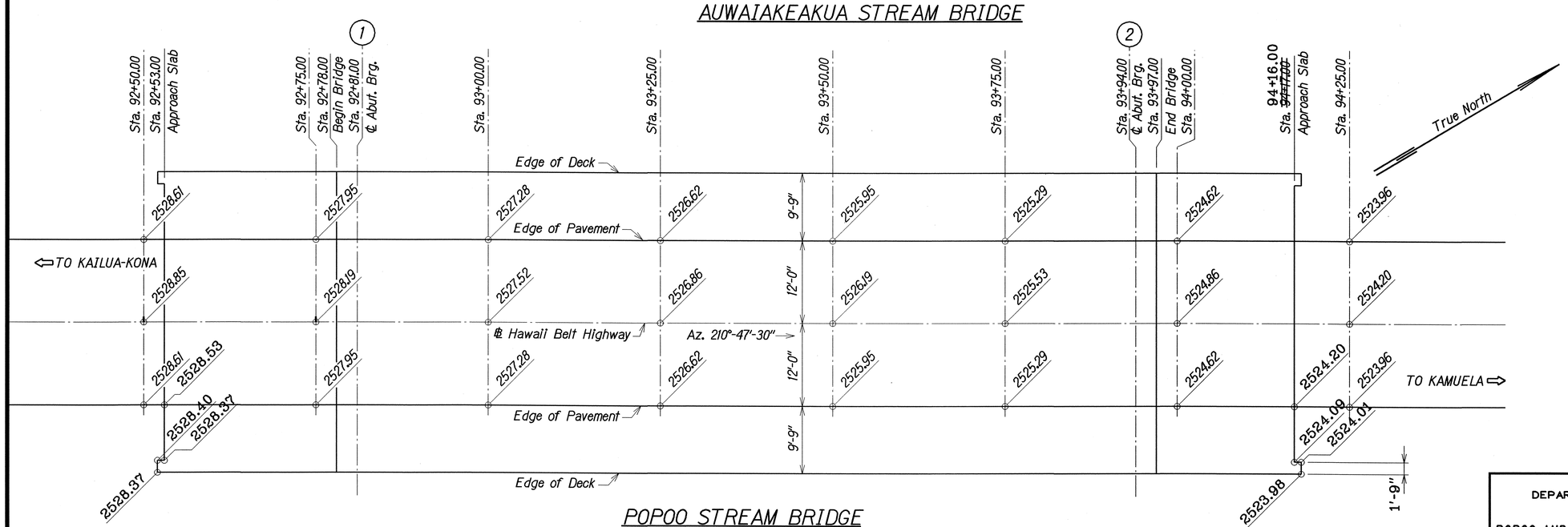

POPOO STREAM BRIDGE

DECK FINISH GRADES

Not to Scale

LEGEND FOR AS-BUILT POSTINGS	
~~	Squiggly line for as-built deletion
~~100.00~~	Double line for as-built deletion
Roadway	Text for as-built posting

ORIGINAL PLAN	SURVEY PLOTTED BY	KSG	DATE	JUN 1998
	DRAWN BY			
	TRACED BY	WW		JUN 1998
NOTE BOOK	DESIGNED BY			JUN 1998
	QUANTITIES BY	WW		JUN 1998
S:\00\00_S5_d	CHECKED BY	DCO		JUN 1998

STATE OF HAWAII
DEPARTMENT OF TRANSPORTATION
HIGHWAYS DIVISION

POPOO AND AUWAIAKEAKUA STREAM BRIDGES
DECK FINISH GRADES

HAWAII BELT ROAD

Replacement of Auwaiakeakua Bridge and Popoo Bridge
Fed. Aid Proj. No. BR0190(13)

Scale: As Noted — Date: Jul, 1998

SHEET No. S5 OF 41 SHEETS

"AS-BUILT"

FED. ROAD DIST. NO.	STATE	FED. AID PROJ. NO.	FISCAL YEAR	SHEET NO.	TOTAL SHEETS
HAWAII	HAW.	BR-0190(13)	1999	13	75

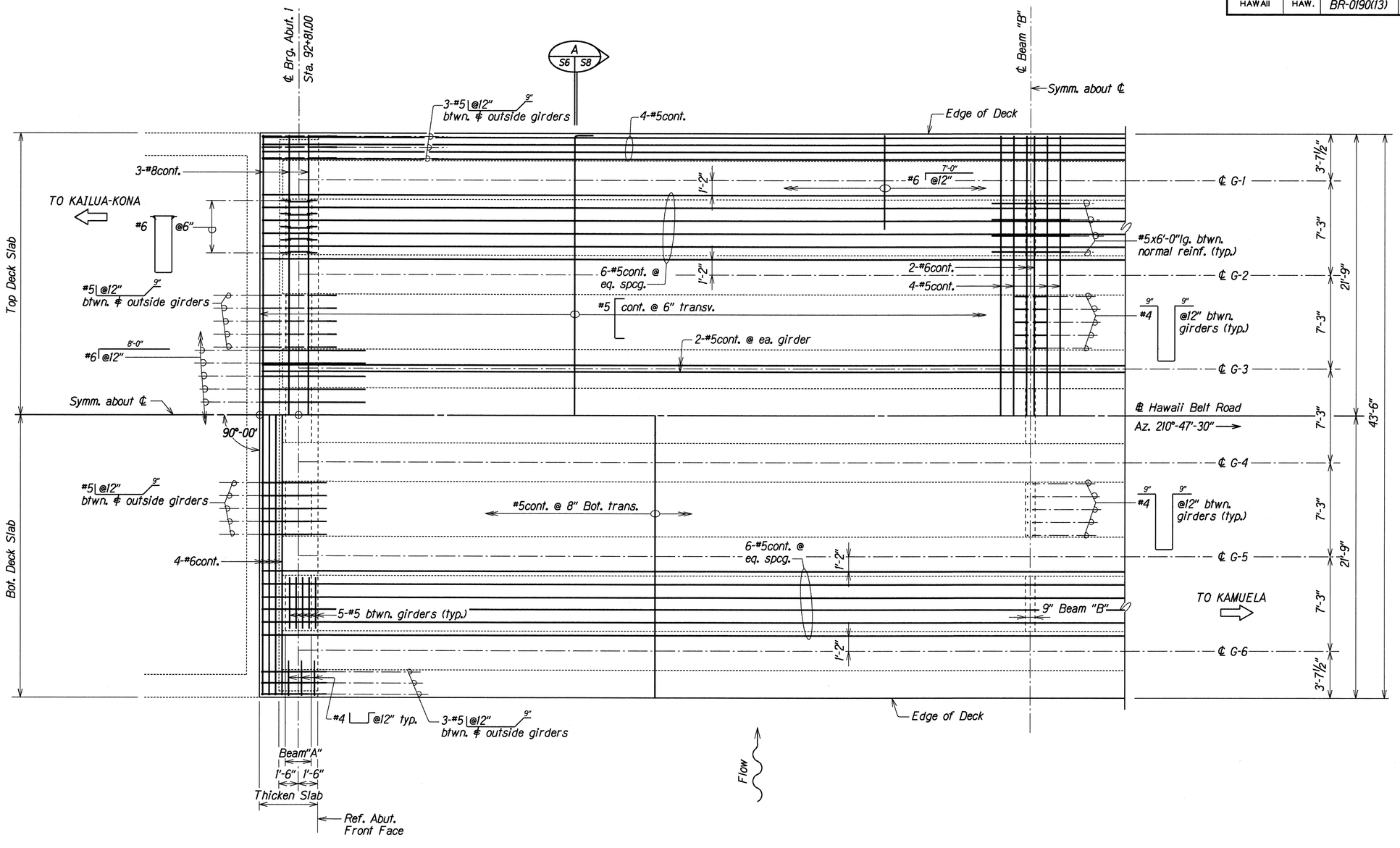

DECK REINFORCEMENT PLAN--POPOO STREAM BRIDGE

Scale: ¼" = 1'-0"

ORIGINAL PLAN	SURVEY PLOTTED BY KSG DATE JUN 1998
	DRAWN BY . .
NOTE BOOK	TRACED BY JNW DATE JUN 1998
	DESIGNED BY JNW DATE JUN 1998
N/A	QUANTITIES BY JNW DATE JUN 1998
N/A	CHECKED BY DCJ DATE JUN 1998

STATE OF HAWAII
DEPARTMENT OF TRANSPORTATION
HIGHWAYS DIVISION

POPOO & AUWAIAKEAKUA STREAM BRIDGES
DECK REINFORCEMENT PLAN--
AUWAIAKEAKUA STREAM BRIDGE

HAWAII BELT ROAD
Replacement of Auwaiakeakua Bridge and Popoo Bridge
Fed. Aid Proj. No. BR-0190(13)

Scale: As Noted Date: Jul. 1998

SHEET No. S6 OF 41 SHEETS

FED. ROAD DIST. NO.	STATE	FED. AID PROJ. NO.	FISCAL YEAR	SHEET NO.	TOTAL SHEETS
HAWAII	HAW.	BR-0190(13)	1999	14	75

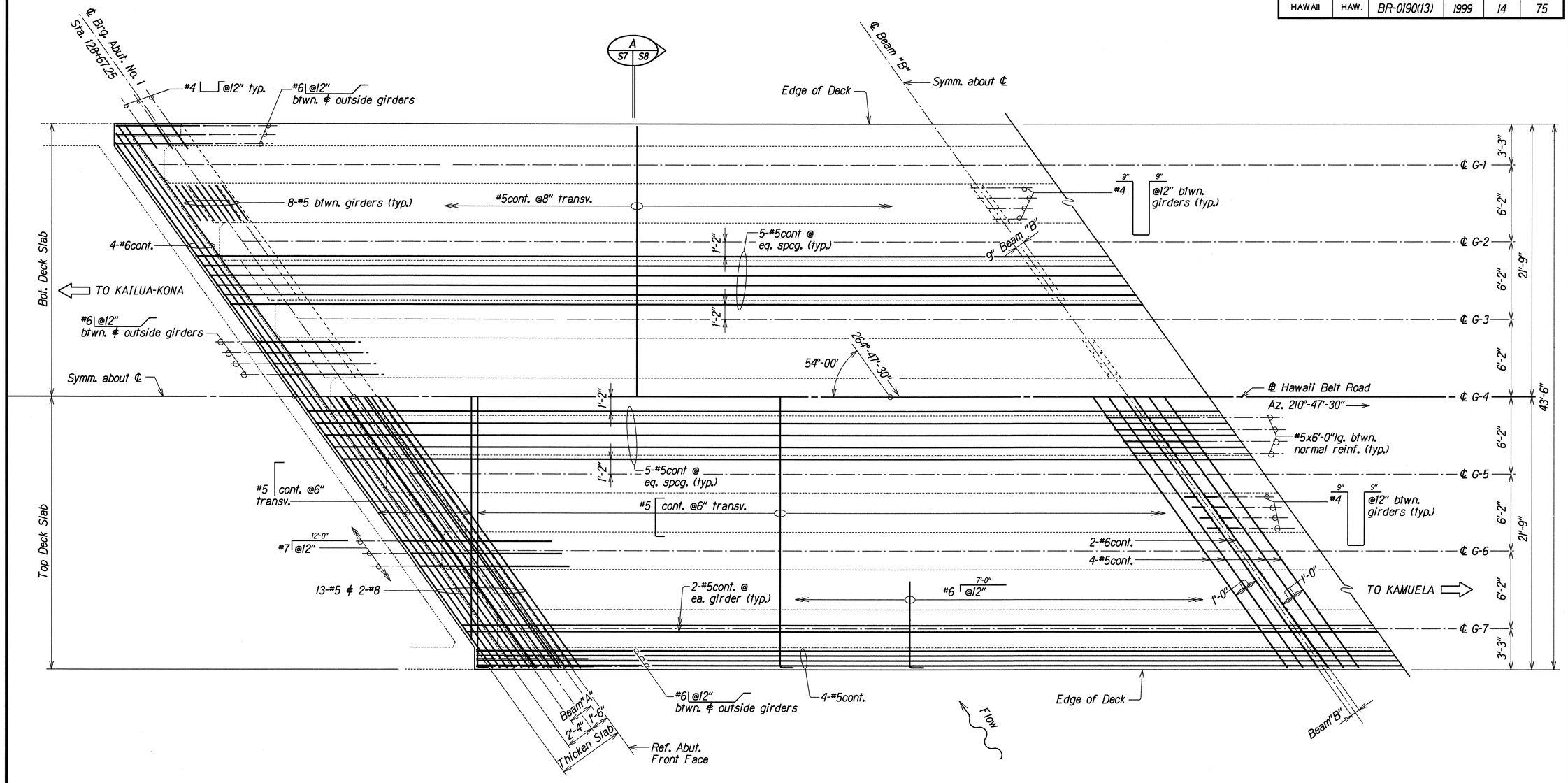

DECK REINFORCEMENT PLAN--AUWAIAKEAKUA STREAM BRIDGE

Scale: 1/4" = 1'-0"

ORIGINAL PLAN	SURVEY PLOTTED BY KSG DATE JUN 1998
	DRAWN BY . . . . .
NOTE BOOK	TRACED BY MW JUN 1998
	DESIGNED BY MW JUN 1998
	QUANTITIES BY MW JUN 1998
N/A	CHECKED BY DCO JUN 1998

STATE OF HAWAII
DEPARTMENT OF TRANSPORTATION
HIGHWAYS DIVISION

POPOO & AUWAIAKEAKUA STREAM BRIDGES
DECK REINFORCEMENT PLAN--
AUWAIAKEAKUA STREAM BRIDGE

HAWAII BELT ROAD
Replacement of Auwaiakeakua Bridge and Popoo Bridge
Fed. Aid Proj. No. BR-0190(13)

Scale: As Noted Date: Jul, 1998

SHEET No. S7 OF 41 SHEETS

FED. ROAD DIST. NO.	STATE	FED. AID PROJ. NO.	FISCAL YEAR	SHEET NO.	TOTAL SHEETS
HAWAII	HAW.	BR-0190(13)	1999	15	75

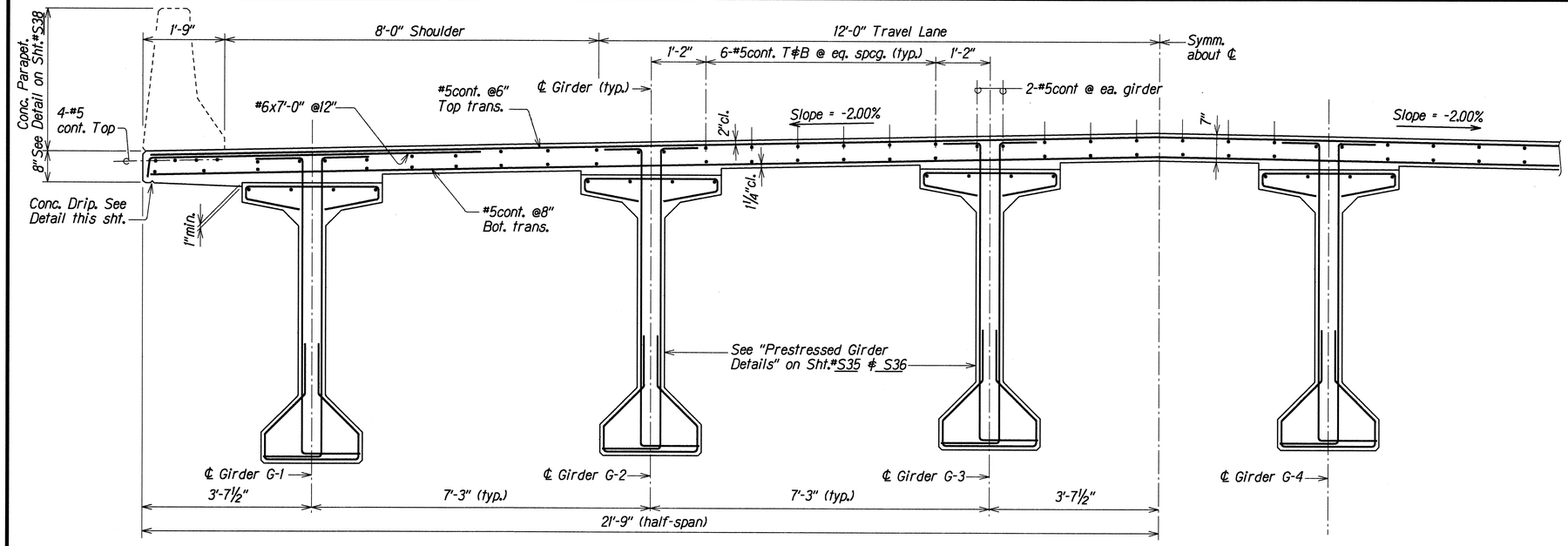

PARTIAL DECK SECTION--POPOO STREAM BRIDGE

Scale: ¾" = 1'-0"

A S6 | S8

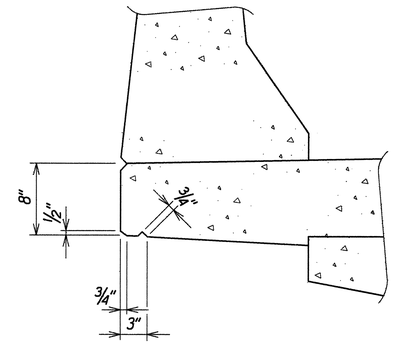

TYPICAL DRIP DETAIL

Scale: 1½" = 1'-0"

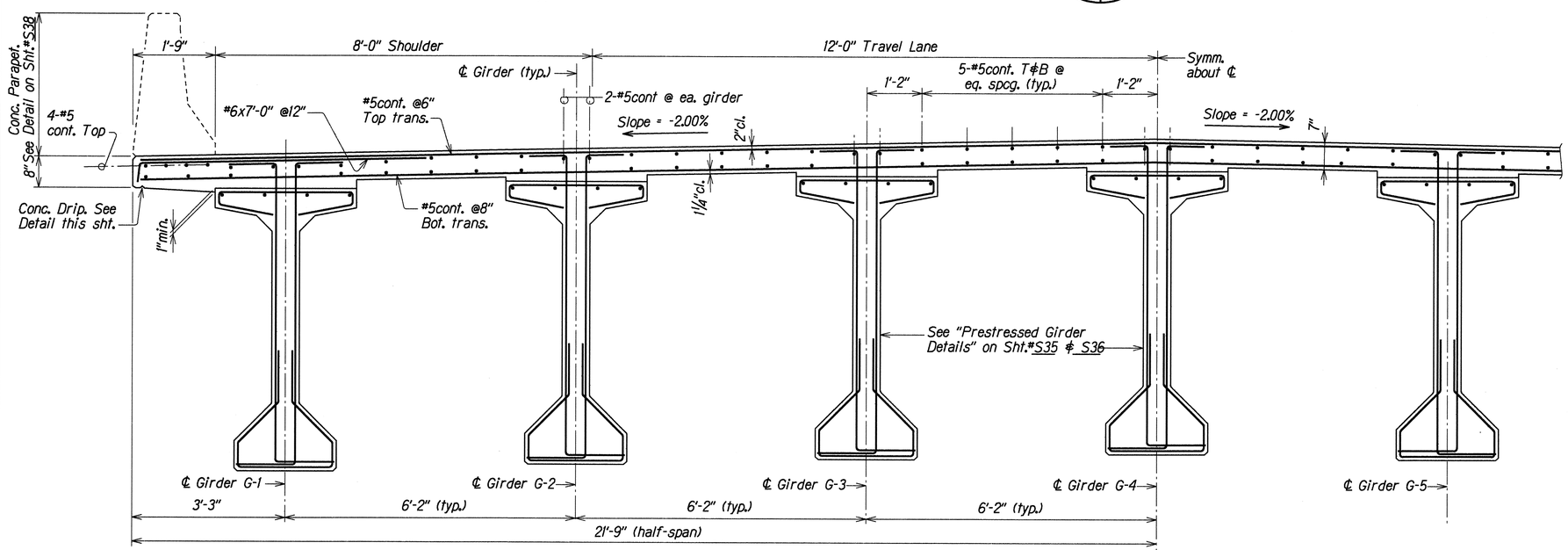

PARTIAL DECK SECTION--AUWAIAKEAKUA STREAM BRIDGE

Scale: ¾" = 1'-0"

A S7 | S8

PARTIAL NORMAL DECK SECTIONS

ORIGINAL PLAN		
SURVEY PLOTTED BY	KSC	JUN. 1998
DRAWN BY		
TRACED BY	WW	JUN. 1998
DESIGNED BY	WW	JUN. 1998
QUANTITIES BY	WW	JUN. 1998
CHECKED BY	DCD	JUN. 1998
NOTE BOOK	N-10000-S8-00	

STATE OF HAWAII
DEPARTMENT OF TRANSPORTATION
HIGHWAYS DIVISION

POPOO AND AUWAIAKEAKUA STREAM BRIDGES
PARTIAL NORMAL DECK SECTIONS
HAWAII BELT ROAD
Replacement of Auwaiakeakua Bridge and Popoo Bridge
Fed. Aid Proj. No. BR-0190(13)

Scale: As Noted — Date: Jul. 1998

SHEET No. S8 OF 41 SHEETS

FED. ROAD DIST. NO.	STATE	FED. AID PROJ. NO.	FISCAL YEAR	SHEET NO.	TOTAL SHEETS
HAWAII	HAW.	BR-0190(13)	1999	16	75

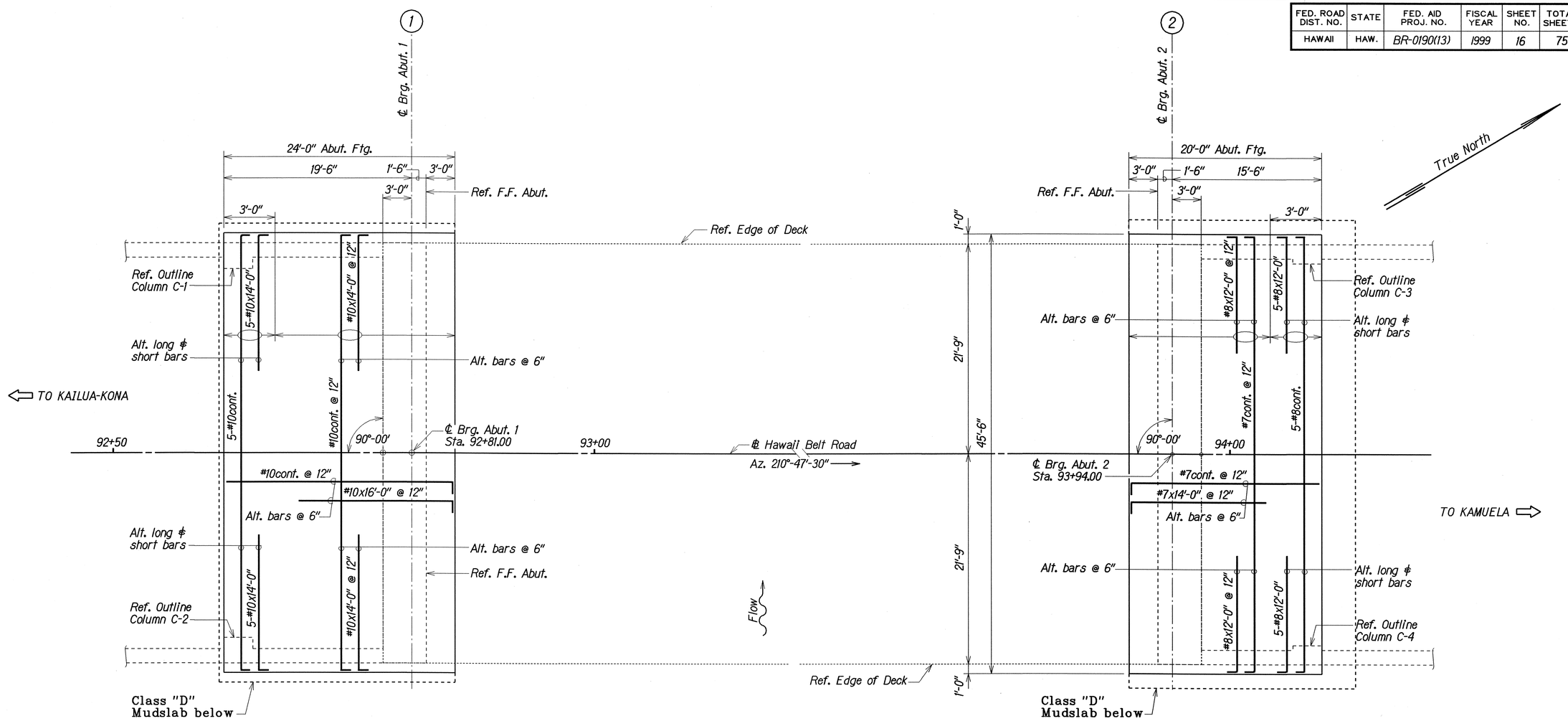

LEGEND FOR AS-BUILT POSTINGS	
∧∧∧∧	Squiggly line for as-built deletion
~~100.00~~	Double line for as-built deletion
Roadway	Text for as-built posting

FOUNDATION PLAN--POPOO STREAM BRIDGE

ABUTMENT TOP REINFORCING ONLY

Scale: 3/16" = 1'-0"

NOTE:
For Foundation bottom reinforcing, see "Typical Section Abutment No. 1" on Sht.#S13 and "Typical Section Abutment No. 2" on Sht.#S14

ORIGINAL PLAN	SURVEY PLOTTED BY	KSG	DATE	JUN 1998
	DRAWN BY			
	TRACED BY			
NOTE BOOK	DESIGNED BY	JWW		JUN 1998
	QUANTITIES BY	JWW		JUN 1998
N/A	CHECKED BY	DDO		JUN 1998

STATE OF HAWAII
DEPARTMENT OF TRANSPORTATION
HIGHWAYS DIVISION

POPOO AND AUWAIAKEAKUA STREAM BRIDGES

FOUNDATION PLAN-
POPOO STREAM BRIDGE

HAWAII BELT ROAD
Replacement of Auwaiakeakua Bridge and Popoo Bridge
Fed. Aid Proj. No. BR-0190(13)

Scale: As Noted Date: Jul. 1998

SHEET No. S9 OF 41 SHEETS

"AS-BUILT"

FED. ROAD DIST. NO.	STATE	FED. AID PROJ. NO.	FISCAL YEAR	SHEET NO.	TOTAL SHEETS
HAWAII	HAW.	BR-0190(13)	1999	17	75

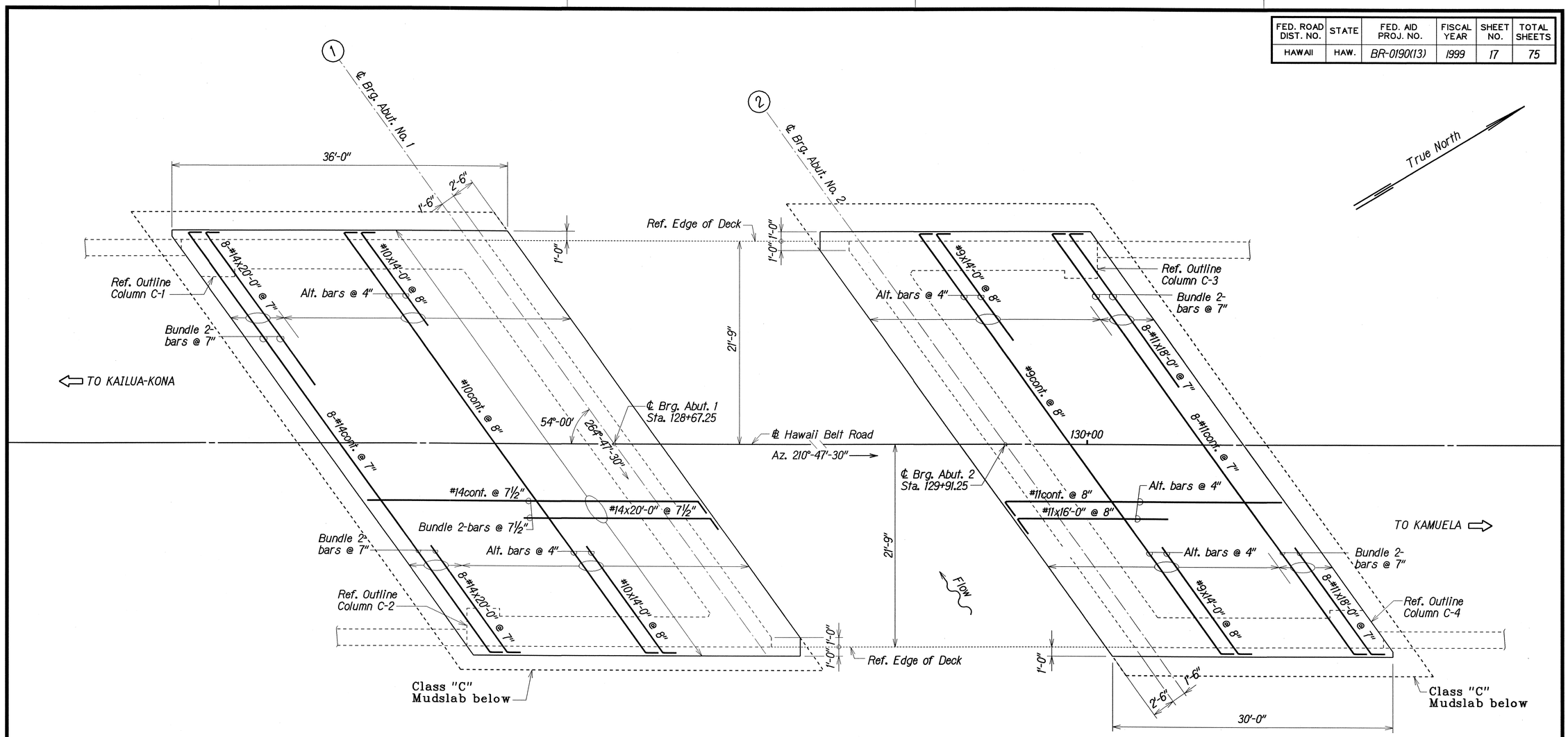

LEGEND FOR AS-BUILT POSTINGS	
∧∧∧∧	Squiggly line for as-built deletion
~~100.00~~	Double line for as-built deletion
Roadway	Text for as-built posting

FOUNDATION PLAN--AUWAIAKEAKUA STREAM BRIDGE

ABUTMENT TOP REINFORCING ONLY
Scale: 3/16" = 1'-0"

NOTE:
For Foundation bottom reinforcing, see "Typical Section Abutment No. 1" on Sht.#S15 and "Typical Section Abutment No. 2" on Sht.#S16

ORIGINAL PLAN			
	SURVEY PLOTTED BY	KSC	JUN 1998
	DRAWN BY		
	TRACED BY		
NOTE BOOK	DESIGNED BY	JWW	JUN 1998
	CHECKED BY	JWW	JUN 1998
	QUANTITIES BY	DCO	JUN 1998
N0000_s10.dgn	CHECKED BY		

STATE OF HAWAII
DEPARTMENT OF TRANSPORTATION
HIGHWAYS DIVISION

POPOO AND AUWAIAKEAKUA STREAM BRIDGES
FOUNDATION PLAN-
AUWAIAKEAKUA STREAM BRIDGE
HAWAII BELT ROAD
Replacement of Auwaiakeakua Bridge and Popoo Bridge
Fed. Aid Proj. No.BR-0190(13)

Scale: As Noted — Date: Jul. 1998

SHEET No. S10 OF 41 SHEETS

"AS-BUILT"

FED. ROAD DIST. NO.	STATE	FED. AID PROJ. NO.	FISCAL YEAR	SHEET NO.	TOTAL SHEETS
HAWAII	HAW.	BR-0190(13)	1999	18	75

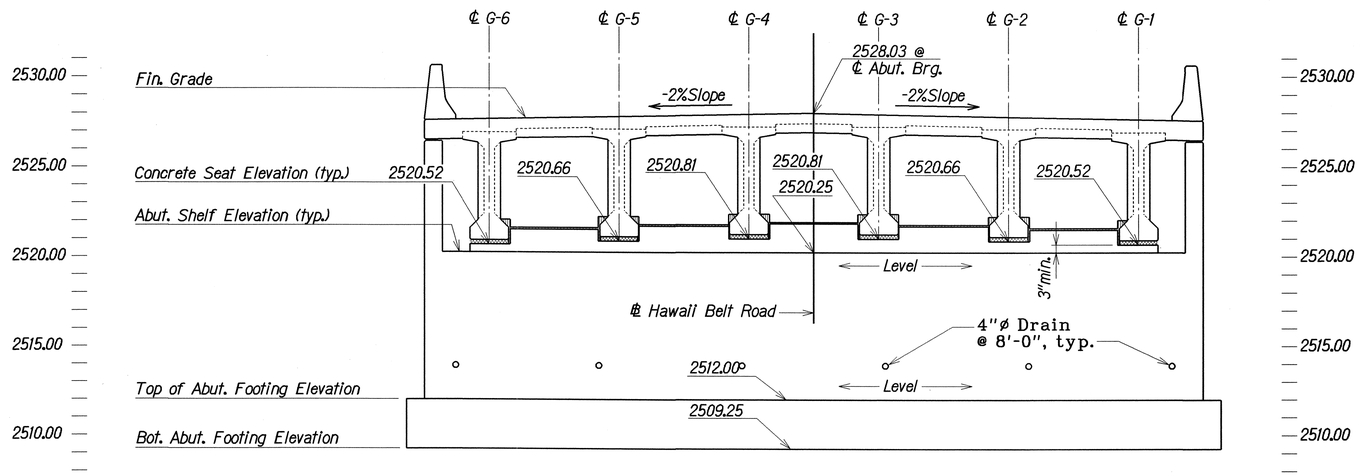

ABUTMENT NO. 1

LEGEND FOR AS-BUILT POSTINGS	
~~	Squiggly line for as-built deletion
~~100.00~~	Double line for as-built deletion
Roadway	Text for as-built posting

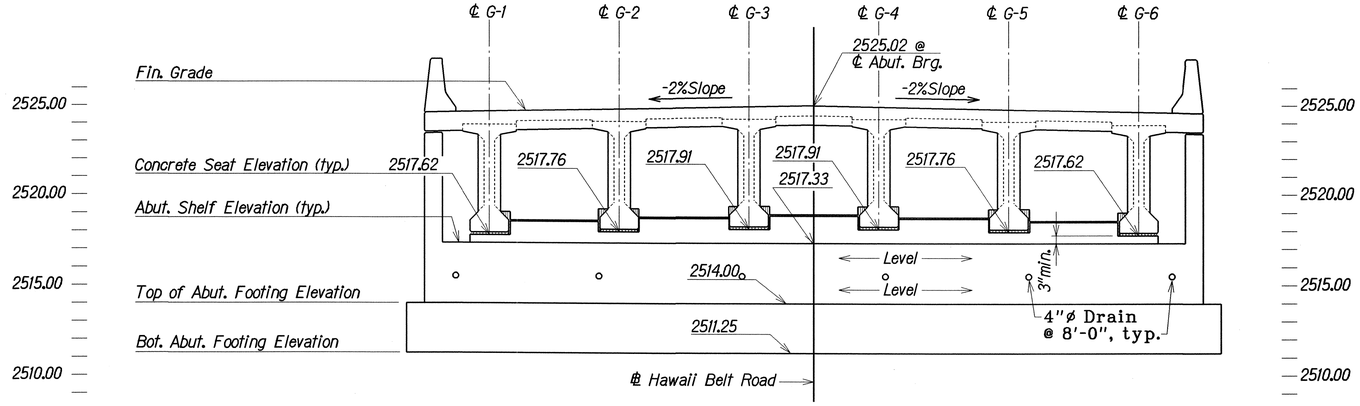

ABUTMENT NO. 2

DEVELOPED ABUTMENT ELEVATION--POPOO STREAM BRIDGE

Scale: 1/4" = 1'-0"

ORIGINAL PLAN		DATE
	SURVEY PLOTTED BY	
	DRAWN BY KSG	JUN 1998
	TRACED BY	
NOTE BOOK	DESIGNED BY JWW	JUN 1998
	QUANTITIES BY JWW	JUN 1998
S-0000-S11.dgn	CHECKED BY DOO	JUN 1998

STATE OF HAWAII
DEPARTMENT OF TRANSPORTATION
HIGHWAYS DIVISION

POPOO AND AUWAIAKEAKUA STREAM BRIDGES

DEVELOPED ABUTMENT ELEVATION--POPOO STREAM BRIDGE

HAWAII BELT ROAD

Replacement of Auwaiakeakua Bridge and Popoo Bridge
Fed. Aid Proj. No. BR-0190(13)

Scale: As Noted — Date: Jul. 1998

SHEET No. S11 OF 41 SHEETS

"AS-BUILT"

FED. ROAD DIST. NO.	STATE	FED. AID PROJ. NO.	FISCAL YEAR	SHEET NO.	TOTAL SHEETS
HAWAII	HAW.	BR-0190(13)	1999	19	75

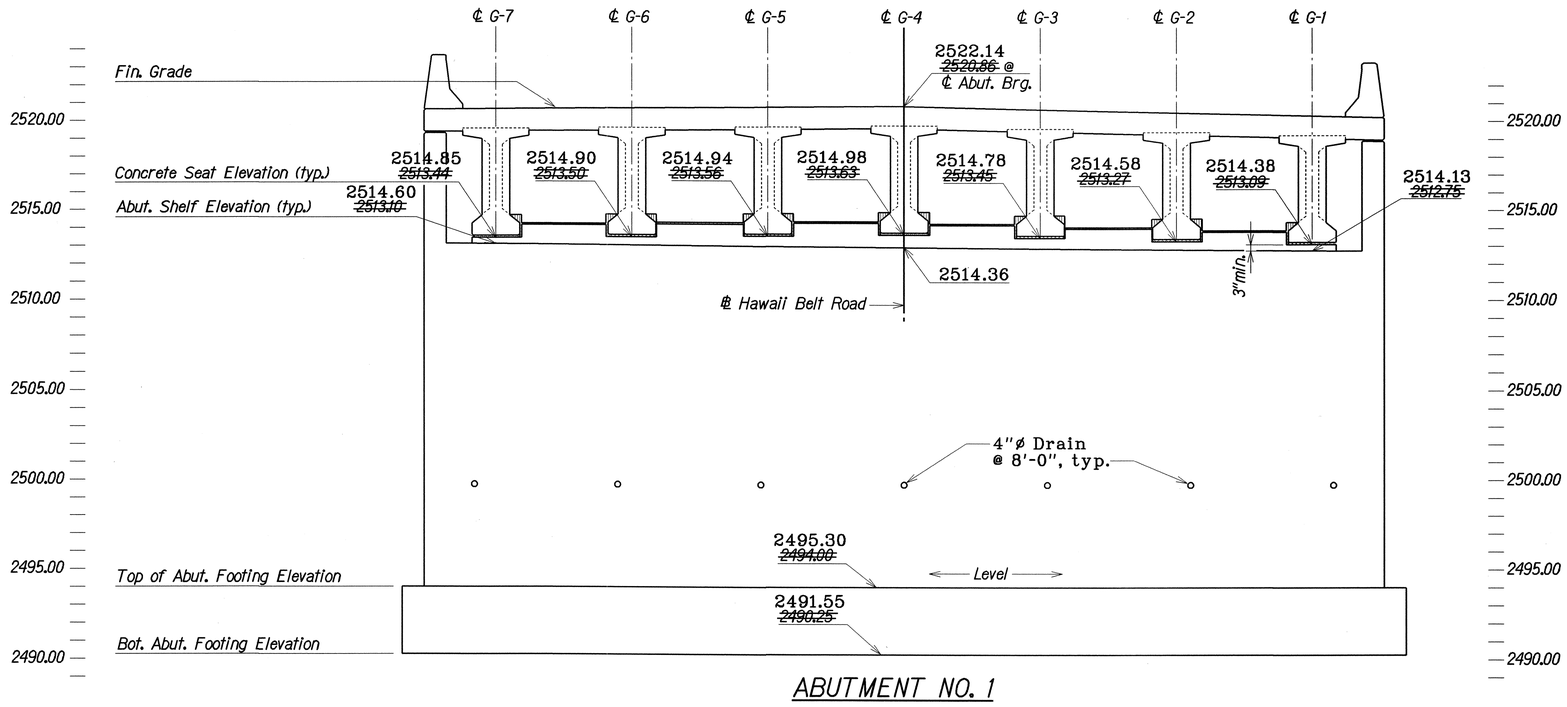

ABUTMENT NO. 1

LEGEND FOR AS-BUILT POSTINGS	
∧∧∧∧	Squiggly line for as-built deletion
~~100.00~~	Double line for as-built deletion
Roadway	Text for as-built posting

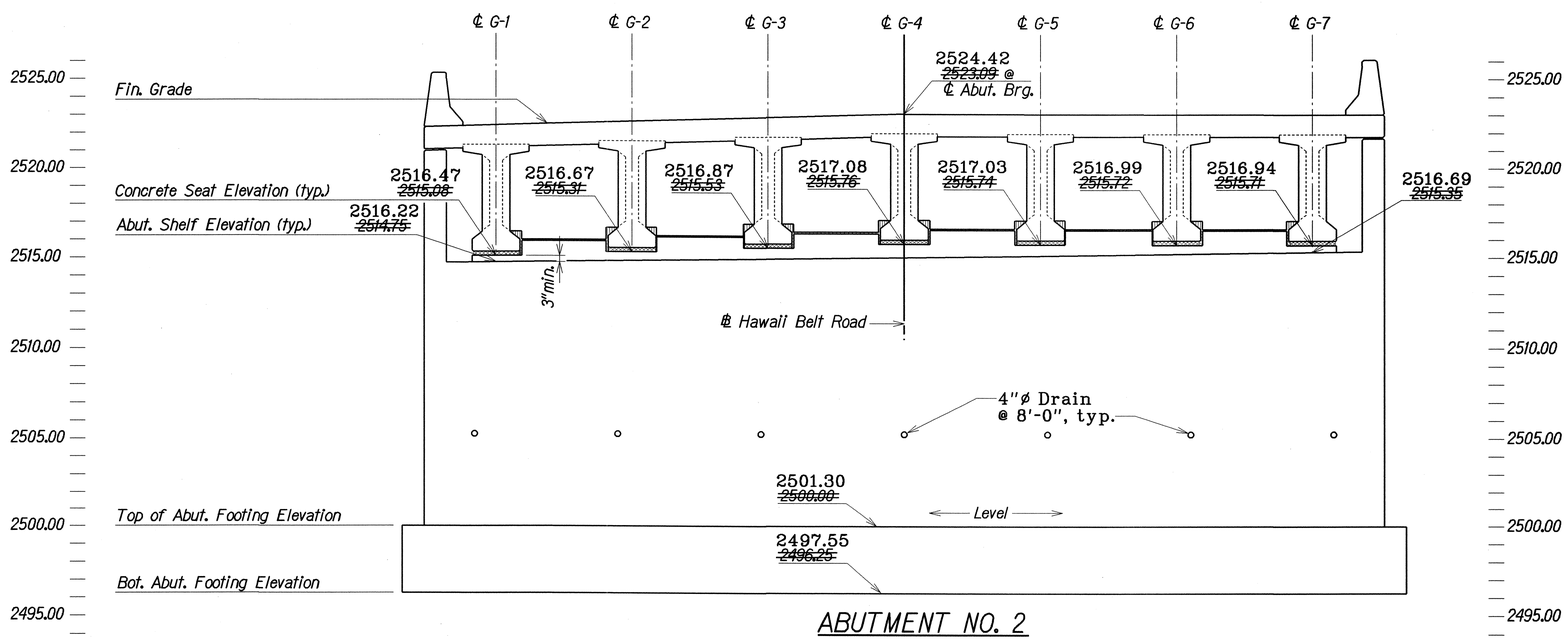

ABUTMENT NO. 2

DEVELOPED ABUTMENT ELEVATION--AUWAIAKEAKUA STREAM BRIDGE

Scale: 1/4" = 1'-0"

ORIGINAL PLAN	SURVEY PLOTTED BY	KSG	DATE
	DRAWN BY		
	TRACED BY		
NOTE BOOK	DESIGNED BY	JWW	JUN 1998
	QUANTITIES BY	JWW	JUN 1998
	CHECKED BY	DOO	JUN 1998

STATE OF HAWAII
DEPARTMENT OF TRANSPORTATION
HIGHWAYS DIVISION

POPOO AND AUWAIAKEAKUA STREAM BRIDGES
DEVELOPED ABUTMENT ELEVATION--
AUWAIAKEAKUA STREAM BRIDGE
HAWAII BELT ROAD
Replacement of Auwaiakeakua Bridge and Popoo Bridge
Fed. Aid Proj. No. BR-0190(13)

Scale: As Noted — Date: Jul, 1998

SHEET No. S12 OF 41 SHEETS

"AS-BUILT"

FED. ROAD DIST. NO.	STATE	FED. AID PROJ. NO.	FISCAL YEAR	SHEET NO.	TOTAL SHEETS
HAWAII	HAW.	BR-0190(13)	1999	20	75

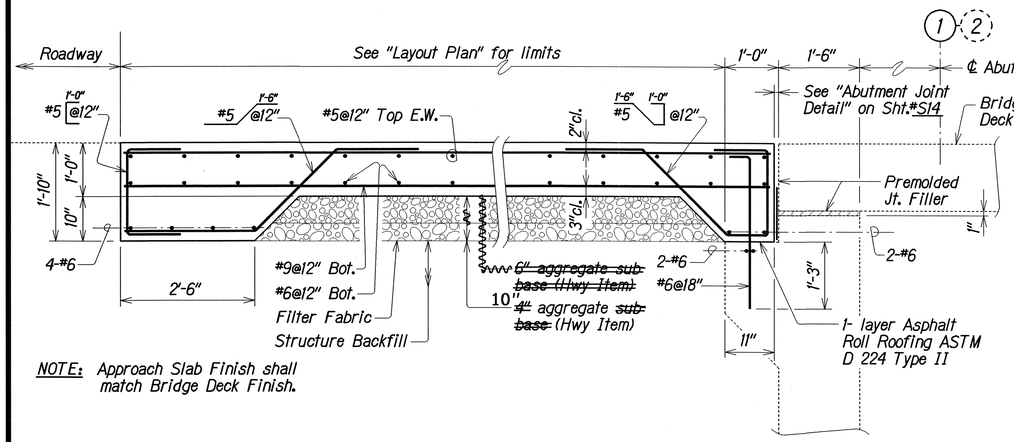

NOTE: Approach Slab Finish shall match Bridge Deck Finish.

APPROACH SLAB REINFORCEMENT DETAIL--POPOO

Scale: 3/4" = 1'-0"

LEGEND FOR AS-BUILT POSTINGS	
~~	Squiggly line for as-built deletion
~~100.00~~	Double line for as-built deletion
Roadway	Text for as-built posting

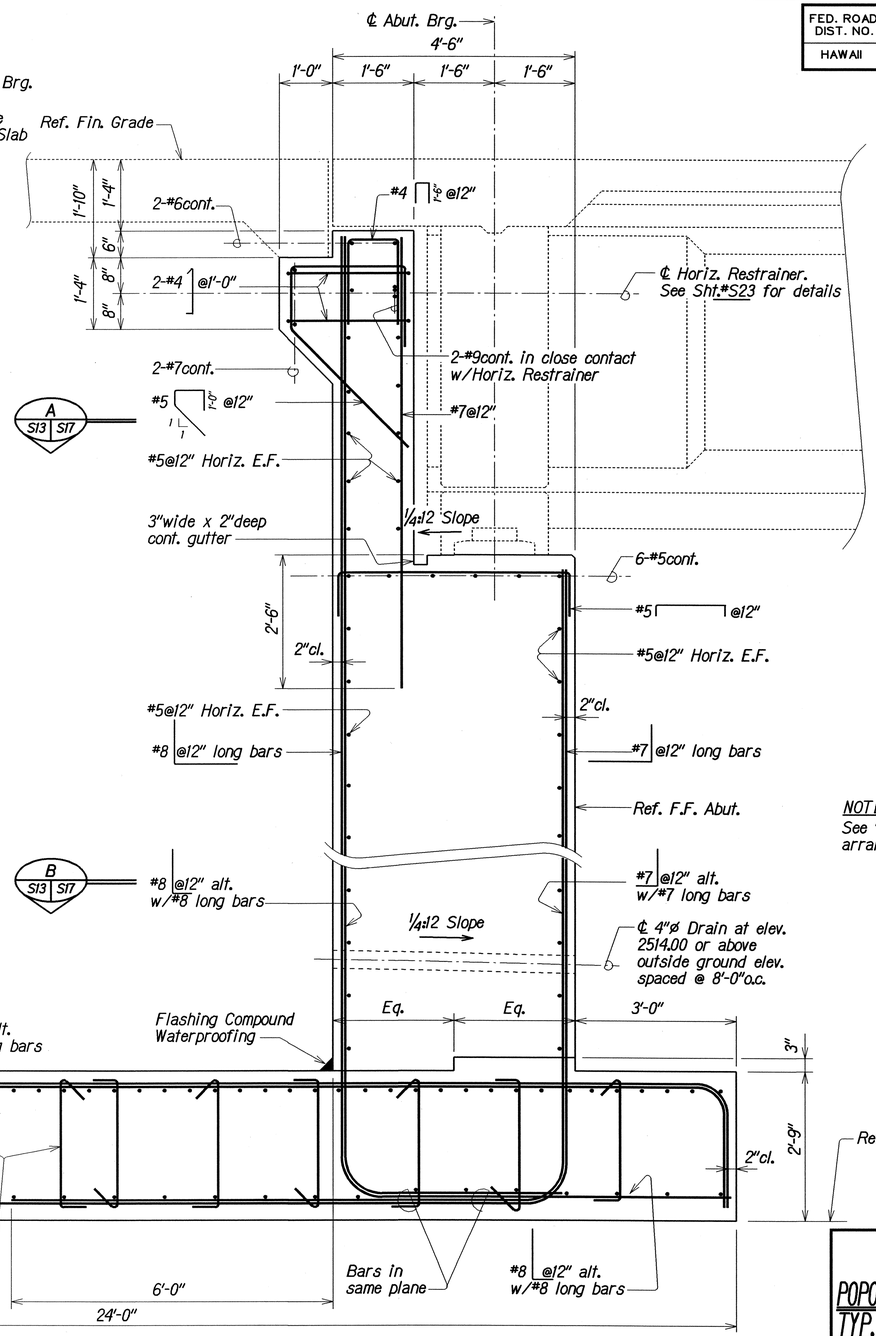

NOTE:
See "Foundation Plan" on Sht.#S9 for arrangement of top reinforcement.

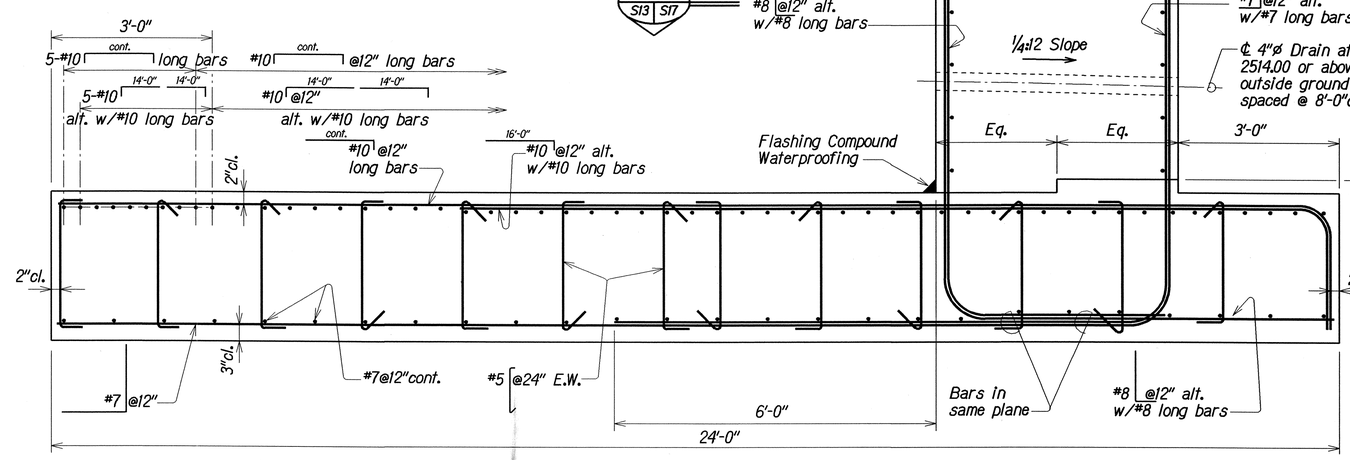

TYPICAL SECTION ABUTMENT NO. 1--POPOO STREAM BRIDGE

Scale: 3/4" = 1'-0"

ORIGINAL PLAN	SURVEY PLOTTED BY KSG	DATE JUN 1998
	DRAWN BY	JUN 1998
	TRACED BY	JUN 1998
NOTE BOOK	DESIGNED BY WW	JUN 1998
	QUANTITIES BY WW	JUN 1998
N/A	CHECKED BY DCO	JUN 1998

STATE OF HAWAII
DEPARTMENT OF TRANSPORTATION
HIGHWAYS DIVISION

POPOO AND AUWAIAKEAKUA STREAM BRIDGES
TYP. SECTION ABUT. NO. 1 AND APPROACH SLAB REINF.--POPOO STREAM BRIDGE

HAWAII BELT ROAD
Replacement of Auwaiakeakua Bridge and Popoo Bridge
Fed. Aid Proj. No. BR-0190(13)

Scale: As Noted Date: Jul, 1998

SHEET No. S13 OF 41 SHEETS

"AS-BUILT"

FED. ROAD DIST. NO.	STATE	FED. AID PROJ. NO.	FISCAL YEAR	SHEET NO.	TOTAL SHEETS
HAWAII	HAW.	BR-0190(13)	1999	21	75

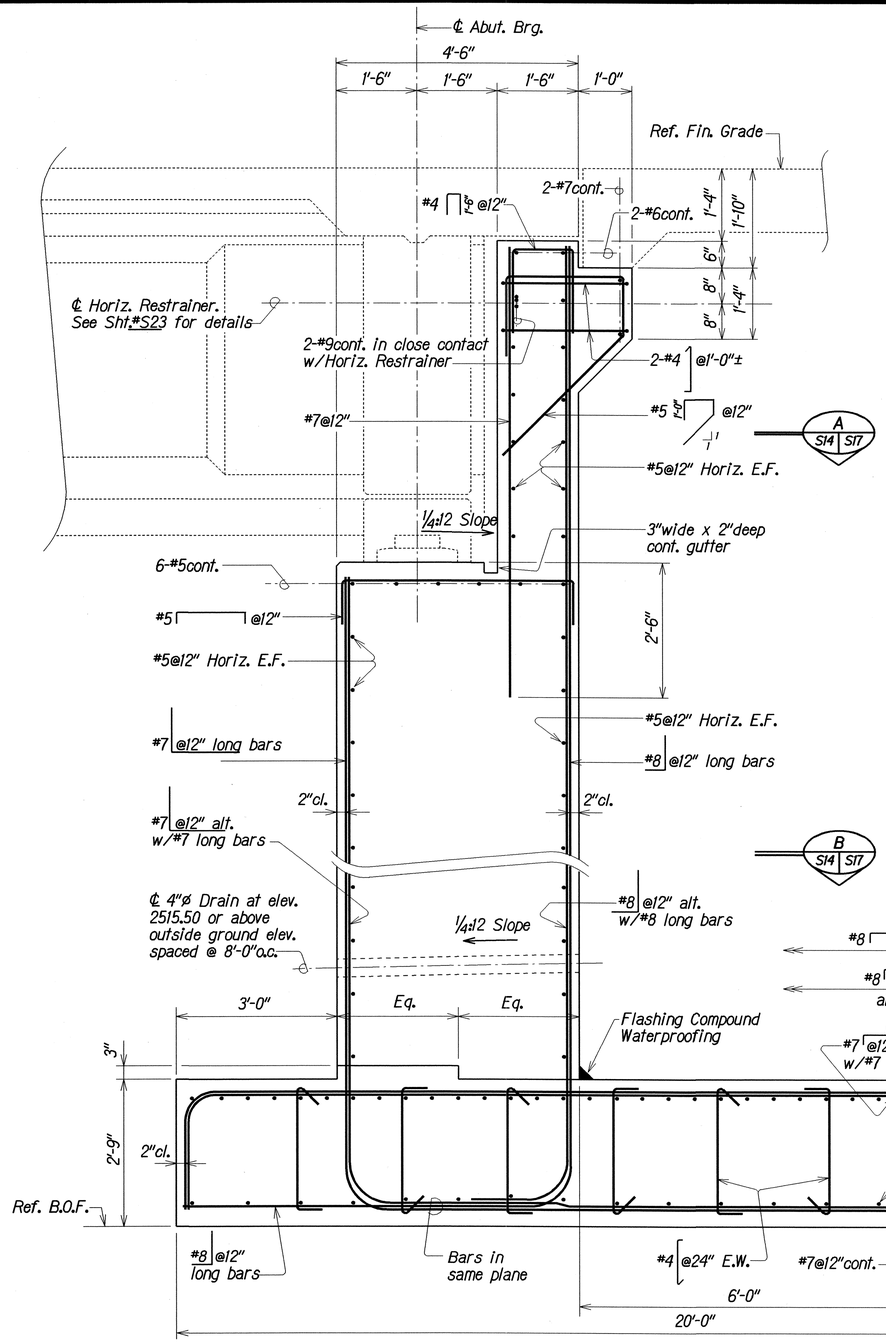

NOTE:
See "Foundation Plan" on Sht.#S9 for Arrangement of top reinforcement.

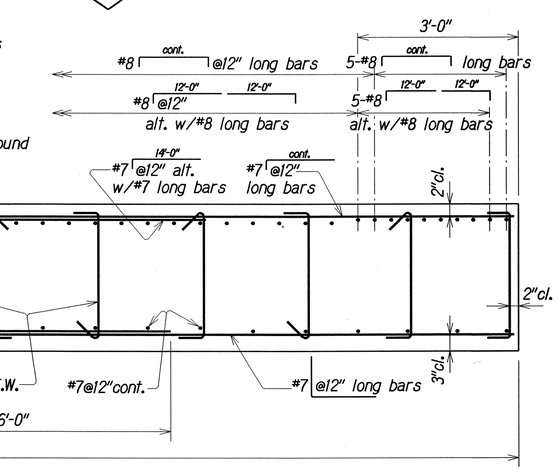

TYPICAL SECTION ABUTMENT NO. 2--POPOO STREAM BRIDGE

Scale: 3/4" = 1'-0"

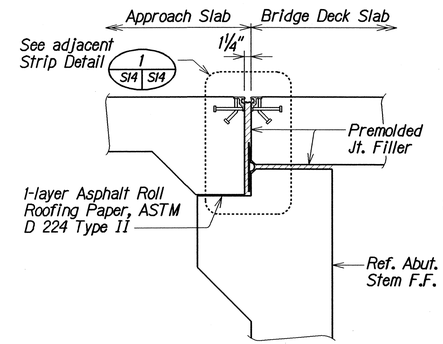

PARTIAL SECTION

NOTES:

1. Frame rails to be A 36 steel.
2. All stud anchors to be ASTM A 108 steel.
3. All stud anchors to be electric arc end welded wth complete fusion.
4. Expansion joints to follow roadway grade.
5. Neoprene seal to be continuous
6. All assemblies to be piece-marked.

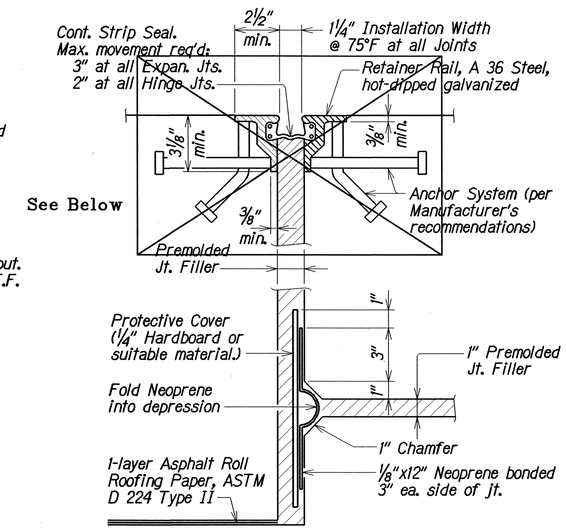

DETAIL

STRIP SEAL AND WEATHERPROOFING STRIP DETAIL

1 S14 S14

TYPICAL ABUTMENT JOINT DETAILS

Not to Scale

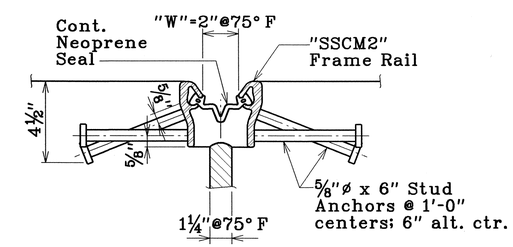

Note: D.S Brown recommends a 2" opening for field installation of seal.

LEGEND FOR AS-BUILT POSTINGS	
~~	Squiggly line for as-built deletion
~~100.00~~	Double line for as-built deletion
Roadway	Text for as-built posting

ORIGINAL PLAN	SURVEY PLOTTED BY	KSG	DATE JUN 1998
	DRAWN BY		• • • •
	TRACED BY	JWW	JUN 1998
NOTE BOOK	DESIGNED BY	JWW	JUN 1998
	QUANTITIES BY	JWW	JUN 1998
N/A	CHECKED BY	DCO	JUN 1998

STATE OF HAWAII
DEPARTMENT OF TRANSPORTATION
HIGHWAYS DIVISION

POPOO AND AUWAIAKEAKUA STREAM BRIDGES
TYPICAL SECTION ABUTMENT NO. 2-POPOO STREAM BRIDGE AND TYP. ABUT. JOINT DETAILS

HAWAII BELT ROAD
Replacement of Auwaiakeakua Bridge and Popoo Bridge
Fed. Aid Proj. No BR-0190(13)

Scale: As Noted — Date: Jul, 1998

SHEET No. S14 OF 41 SHEETS

"AS-BUILT"

FED. ROAD DIST. NO.	STATE	FED. AID PROJ. NO.	FISCAL YEAR	SHEET NO.	TOTAL SHEETS
HAWAII	HAW.	BR-0190(13)	1999	22	75

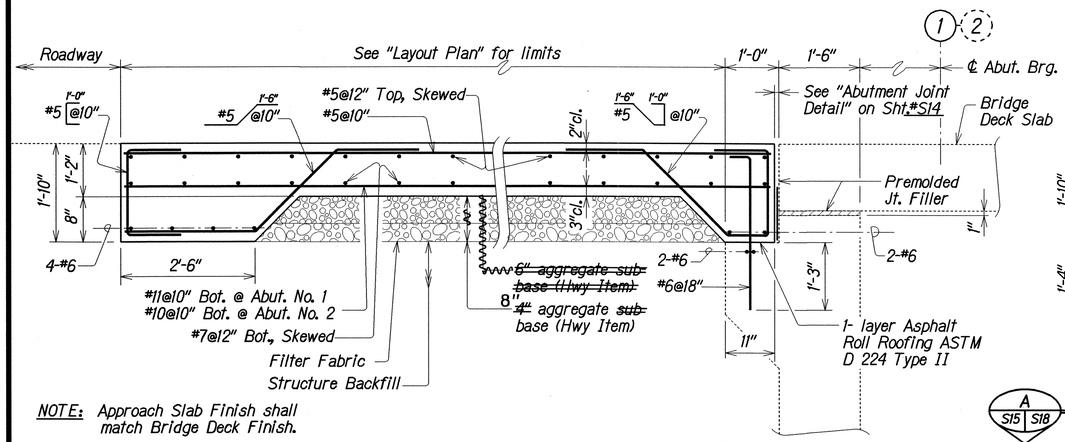

NOTE: Approach Slab Finish shall match Bridge Deck Finish.

APPROACH SLAB REINFORCEMENT DETAIL--AUWAIAKEAKUA

Scale: 3/4" = 1'-0"

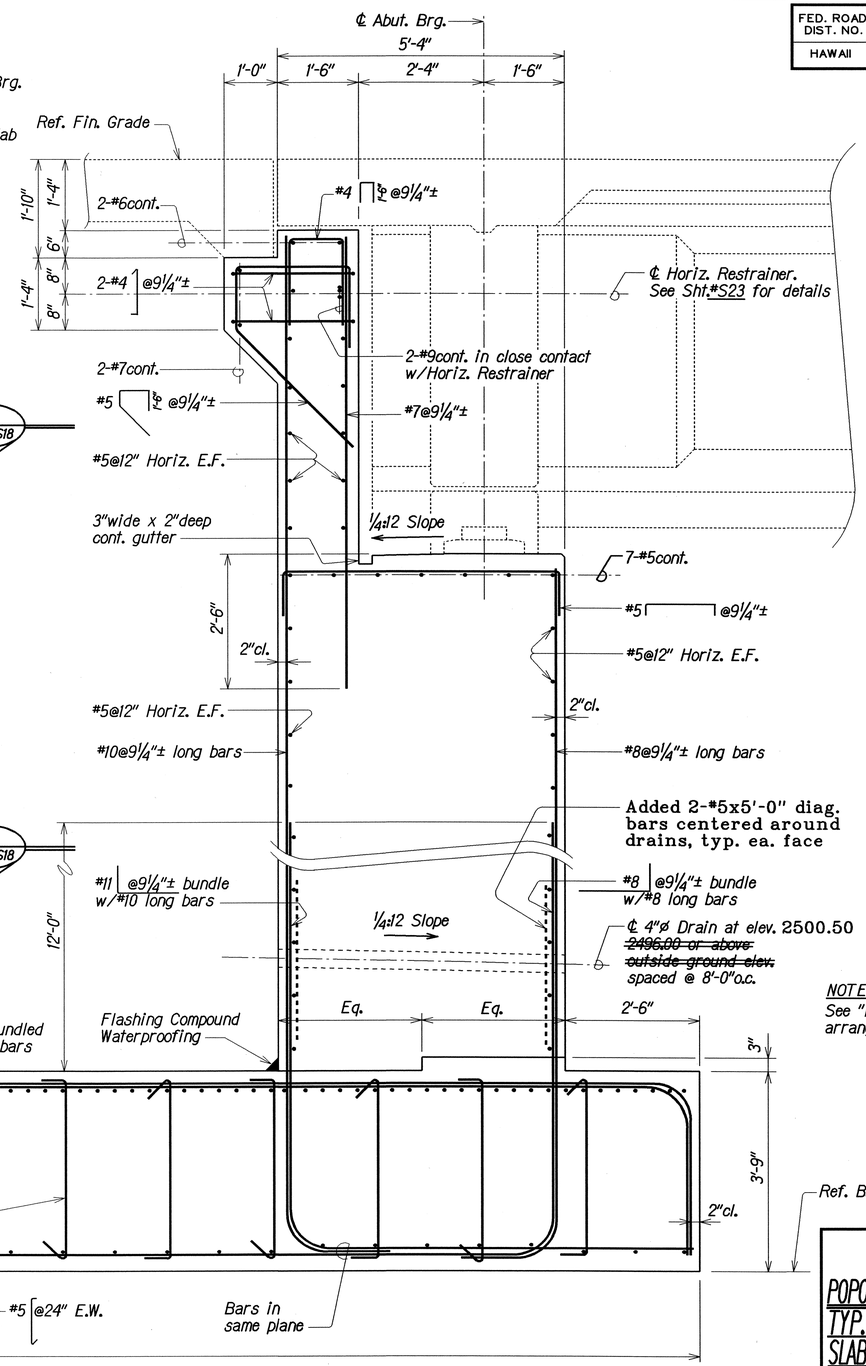

NOTE:
See "Foundation Plan" on Sht.#S10 for arrangement of top reinforcement.

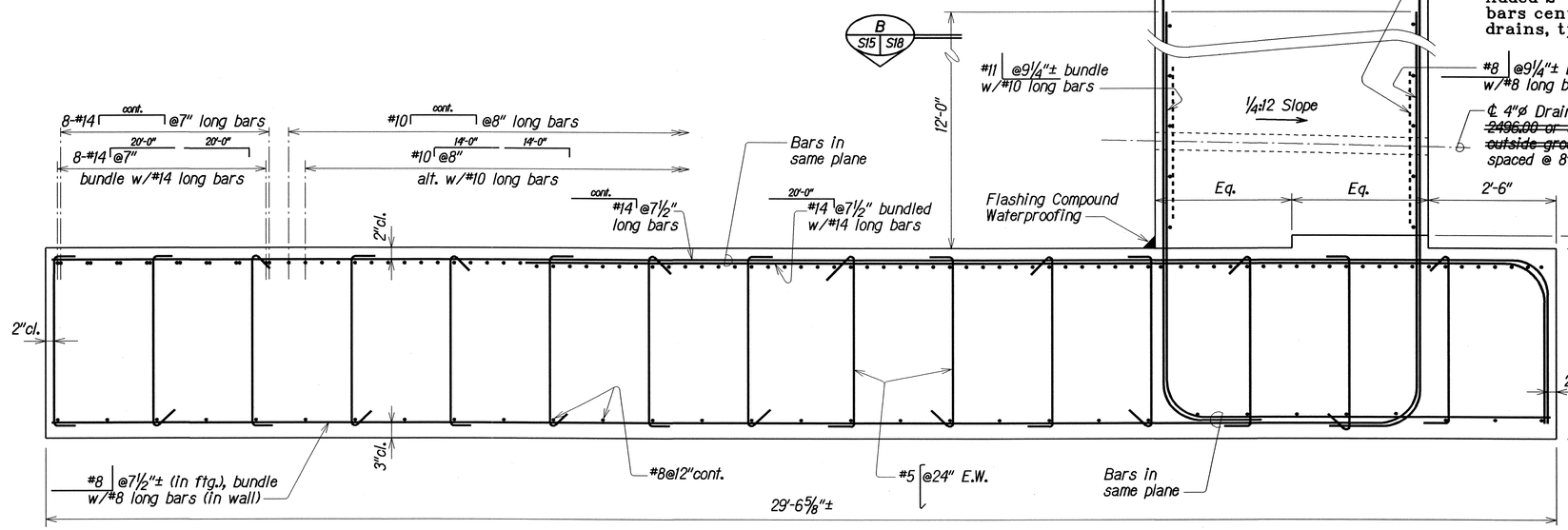

TYPICAL SECTION ABUTMENT NO. 1--AUWAIAKEAKUA STREAM BRIDGE

Scale: 3/4" = 1'-0"

LEGEND FOR AS-BUILT POSTINGS

~~	Squiggly line for as-built deletion
~~100.00~~	Double line for as-built deletion
Roadway	Text for as-built posting

ORIGINAL PLAN	SURVEY PLOTTED BY	KSG	DATE
	DRAWN BY		JUN 1998
NOTE BOOK	TRACED BY	JWW	JUN 1998
	DESIGNED BY	JWW	JUN 1998
	QUANTITIES BY		JUN 1998
N/A	CHECKED BY	DCO	JUN 1998

STATE OF HAWAII
DEPARTMENT OF TRANSPORTATION
HIGHWAYS DIVISION

POPOO AND AUWAIAKEAKUA STREAM BRIDGES
TYP. SECTION ABUT. NO. 1 AND APPROACH SLAB REINF.-AUWAIAKEAKUA STREAM BRIDGE

HAWAII BELT ROAD
Replacement of Auwaiakeakua Bridge and Popoo Bridge
Fed. Aid Proj. No. BR-0190(13)

Scale: As Noted — Date: Jul, 1998

SHEET No. S15 OF 41 SHEETS

"AS-BUILT"

FED. ROAD DIST. NO.	STATE	FED. AID PROJ. NO.	FISCAL YEAR	SHEET NO.	TOTAL SHEETS
HAWAII	HAW.	BR-0190(13)	1999	23	75

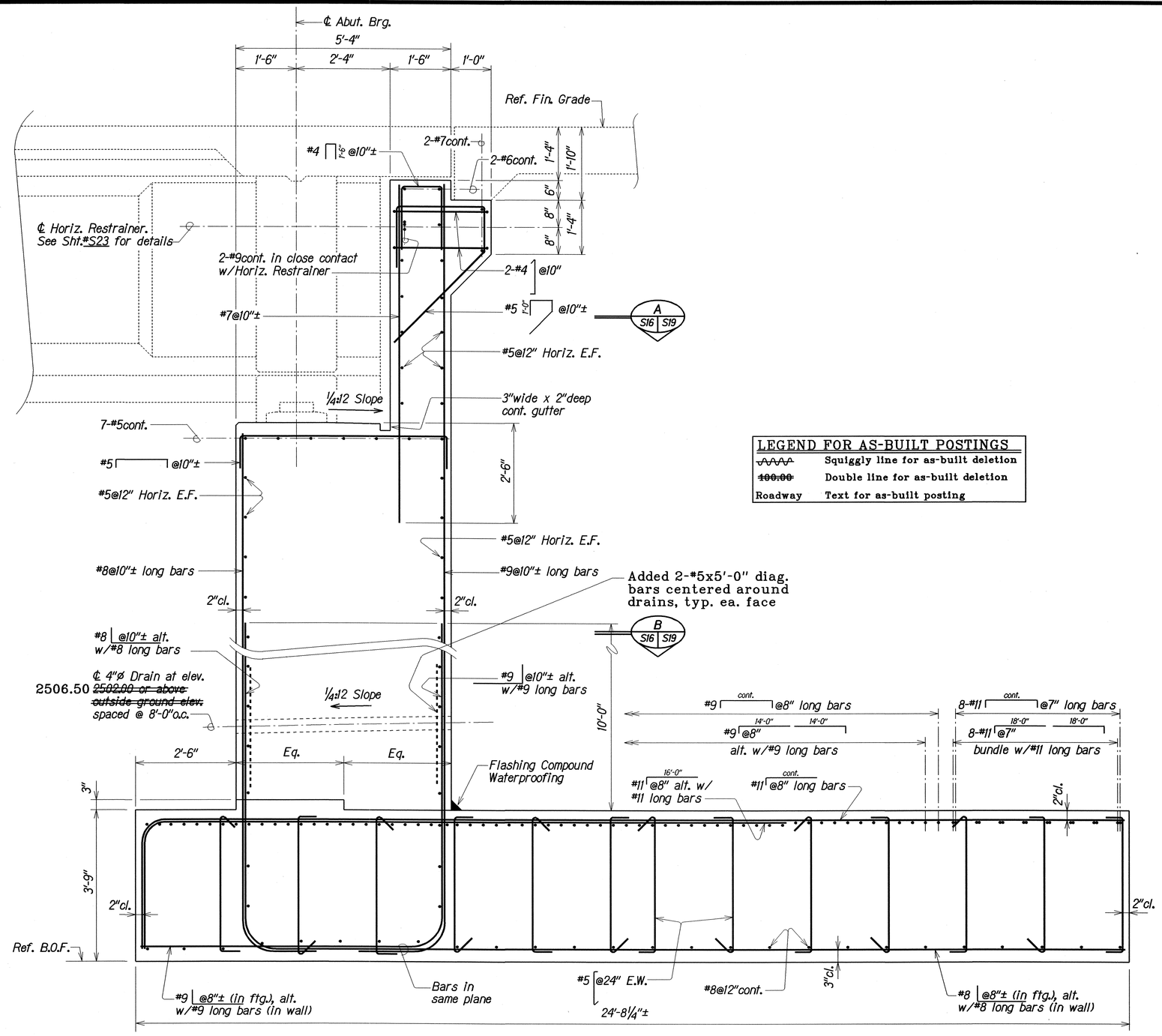

LEGEND FOR AS-BUILT POSTINGS

~~	Squiggly line for as-built deletion
~~100.00~~	Double line for as-built deletion
Roadway	Text for as-built posting

NOTE:
See "Foundation Plan" on Sht.#S10 for arrangement of top reinforcement.

TYPICAL SECTION ABUTMENT NO. 2--AUWAIAKEAKUA STREAM BRIDGE

Scale: 3/4" = 1'-0"

ORIGINAL PLAN	SURVEY PLOTTED BY	KSG	DATE	JUN 1998
	DRAWN BY			
	TRACED BY	JWW	DATE	JUN 1998
NOTE BOOK	DESIGNED BY	JWW	DATE	JUN 1998
	QUANTITIES BY	WWW	DATE	JUN 1998
N00000_S16.dgn	CHECKED BY	DCO	DATE	JUN 1998

STATE OF HAWAII
DEPARTMENT OF TRANSPORTATION
HIGHWAYS DIVISION

POPOO AND AUWAIAKEAKUA STREAM BRIDGES
TYPICAL SECTION ABUTMENT NO. 2--
AUWAIAKEAKUA STREAM BRIDGE
HAWAII BELT ROAD
Replacement of Auwaiakeakua Bridge and Popoo Bridge
Fed. Aid Proj. No. BR-0190(13)

Scale: As Noted Date: Jul, 1998

SHEET No. S16 OF 41 SHEETS

"AS-BUILT"

FED. ROAD DIST. NO.	STATE	FED. AID PROJ. NO.	FISCAL YEAR	SHEET NO.	TOTAL SHEETS
HAWAII	HAW.	BR-0190(13)	1999	24	75

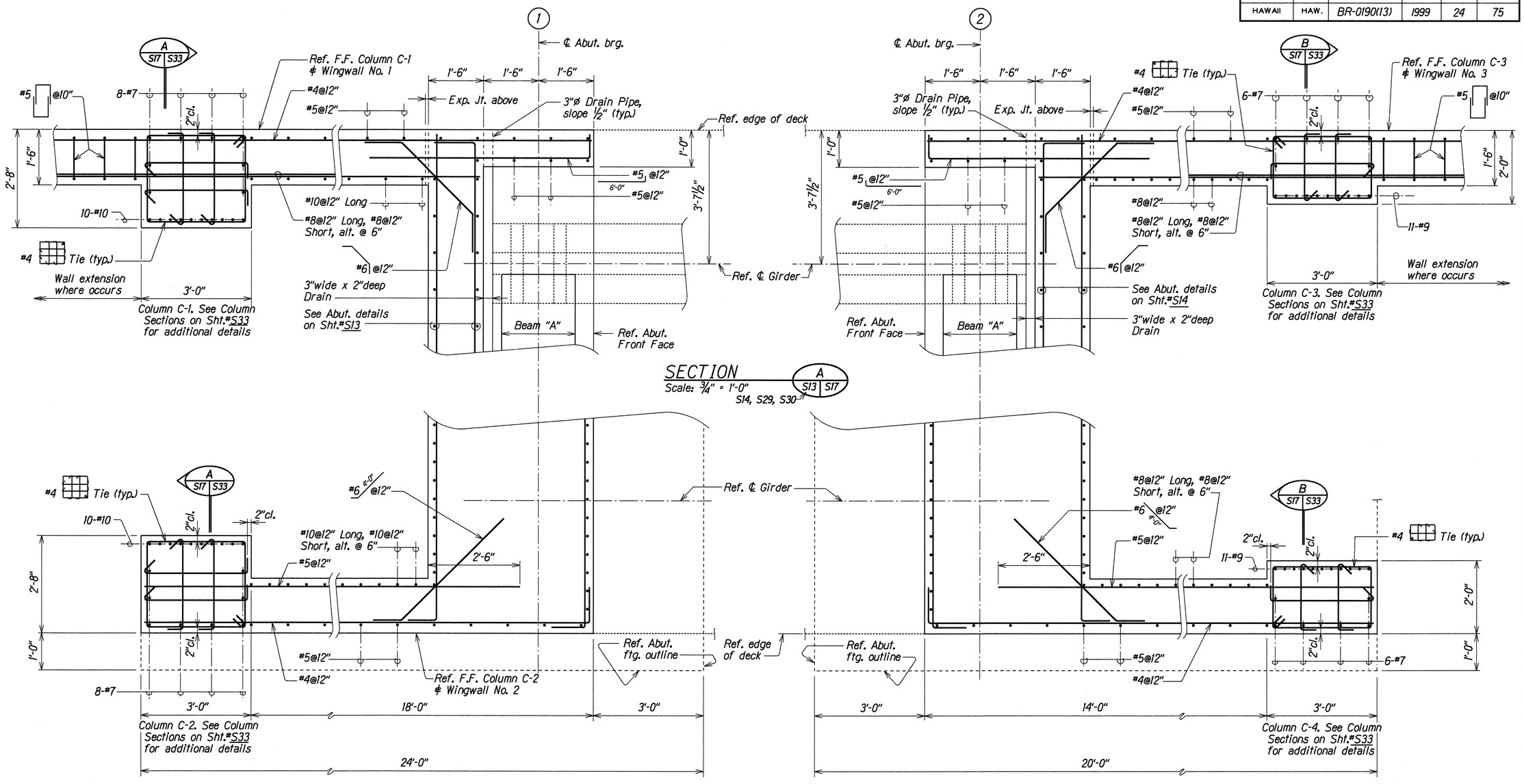

ABUTMENT NO. 1

ABUTMENT NO. 2

SECTIONS THRU ABUTMENT NOS. 1 AND 2--POPOO STREAM BRIDGE

ORIGINAL PLAN	SURVEY PLOTTED BY	KSG	DATE JUN 1998
	DRAWN BY		
	TRACED BY	JWW	JUN 1998
NOTE BOOK	DESIGNED BY	JWW	JUN 1998
	QUANTITIES BY	DCO	JUN 1998
40090_S17.dgn	CHECKED BY		

STATE OF HAWAII
DEPARTMENT OF TRANSPORTATION
HIGHWAYS DIVISION

POPOO AND AUWAIAKEAKUA STREAM BRIDGES
SECTIONS THRU ABUTMENT NOS. 1 AND 2--POPOO STREAM BRIDGE

HAWAII BELT ROAD
Replacement of Auwaiakeakua Bridge and Popoo Bridge
Fed. Aid Proj. No. BR-0190(13)

Scale: As Noted Date: Jul. 1998

SHEET No. S17 OF 41 SHEETS

FED. ROAD DIST. NO.	STATE	FED. AID PROJ. NO.	FISCAL YEAR	SHEET NO.	TOTAL SHEETS
HAWAII	HAW.	BR-0190(13)	1999	25	75

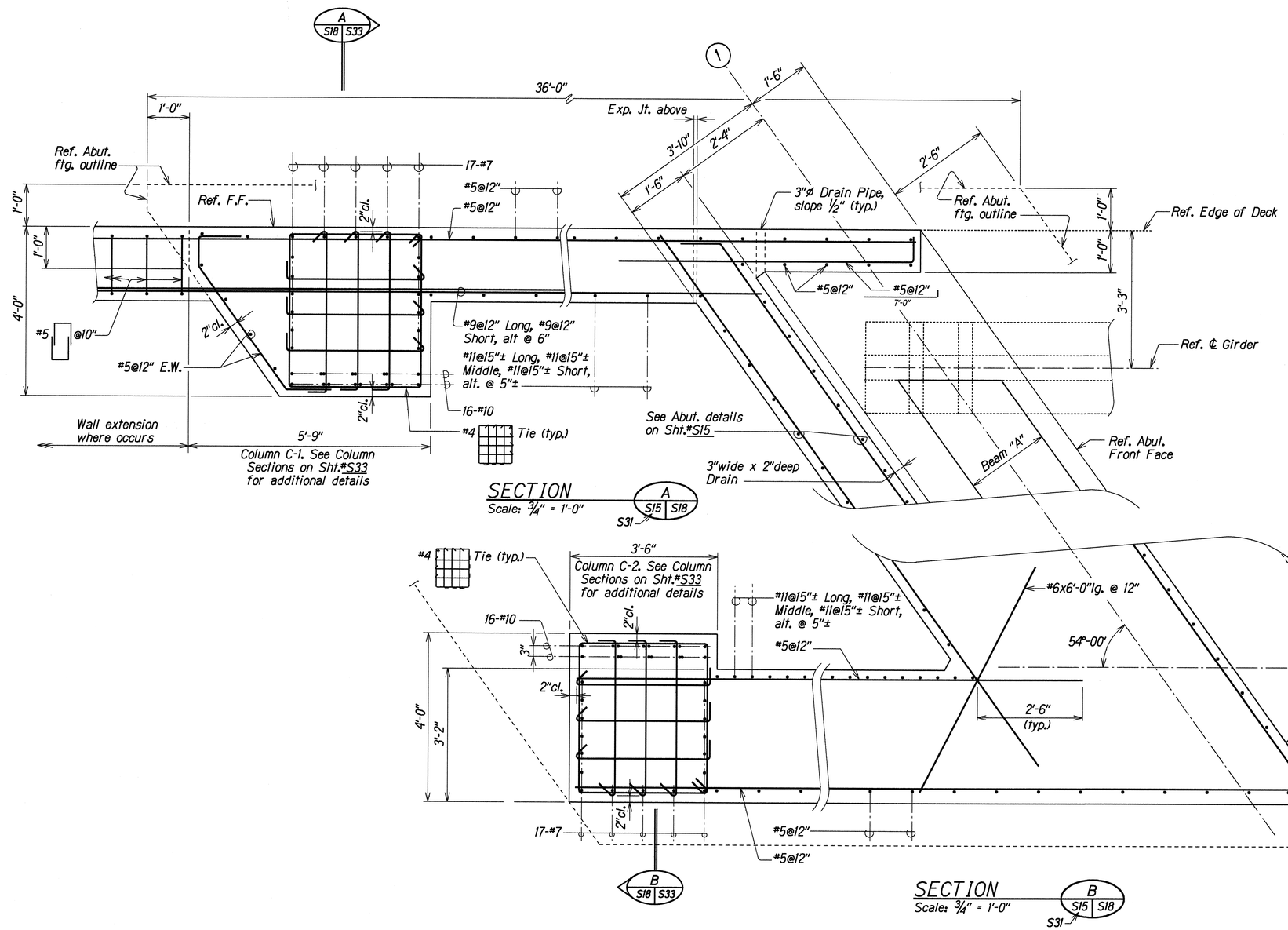

SECTIONS THRU ABUTMENT NO. 1--AUWAIAKEAKUA STREAM BRIDGE

ORIGINAL PLAN	SURVEY PLOTTED BY	KSG	DATE
	DRAWN BY		JUN 1998
	TRACED BY		JUN 1998
NOTE BOOK	DESIGNED BY	JWW	JUN 1998
	QUANTITIES BY	JWW	JUN 1998
40000 S18 dgn	CHECKED BY	JCO	JUN 1998

STATE OF HAWAII
DEPARTMENT OF TRANSPORTATION
HIGHWAYS DIVISION

POPOO AND AUWAIAKEAKUA STREAM BRIDGES
SECTIONS THRU ABUTMENT NO. 1--
AUWAIAKEAKUA STREAM BRIDGE

HAWAII BELT ROAD
Replacement of Auwaiakeakua Bridge and Popoo Bridge
Fed. Aid Proj. No. BR-0190(13)

Scale: As Noted Date: Jul. 1998

SHEET No. S18 OF 41 SHEETS

FED. ROAD DIST. NO.	STATE	FED. AID PROJ. NO.	FISCAL YEAR	SHEET NO.	TOTAL SHEETS
HAWAII	HAW.	BR-0190(13)	1999	26	75

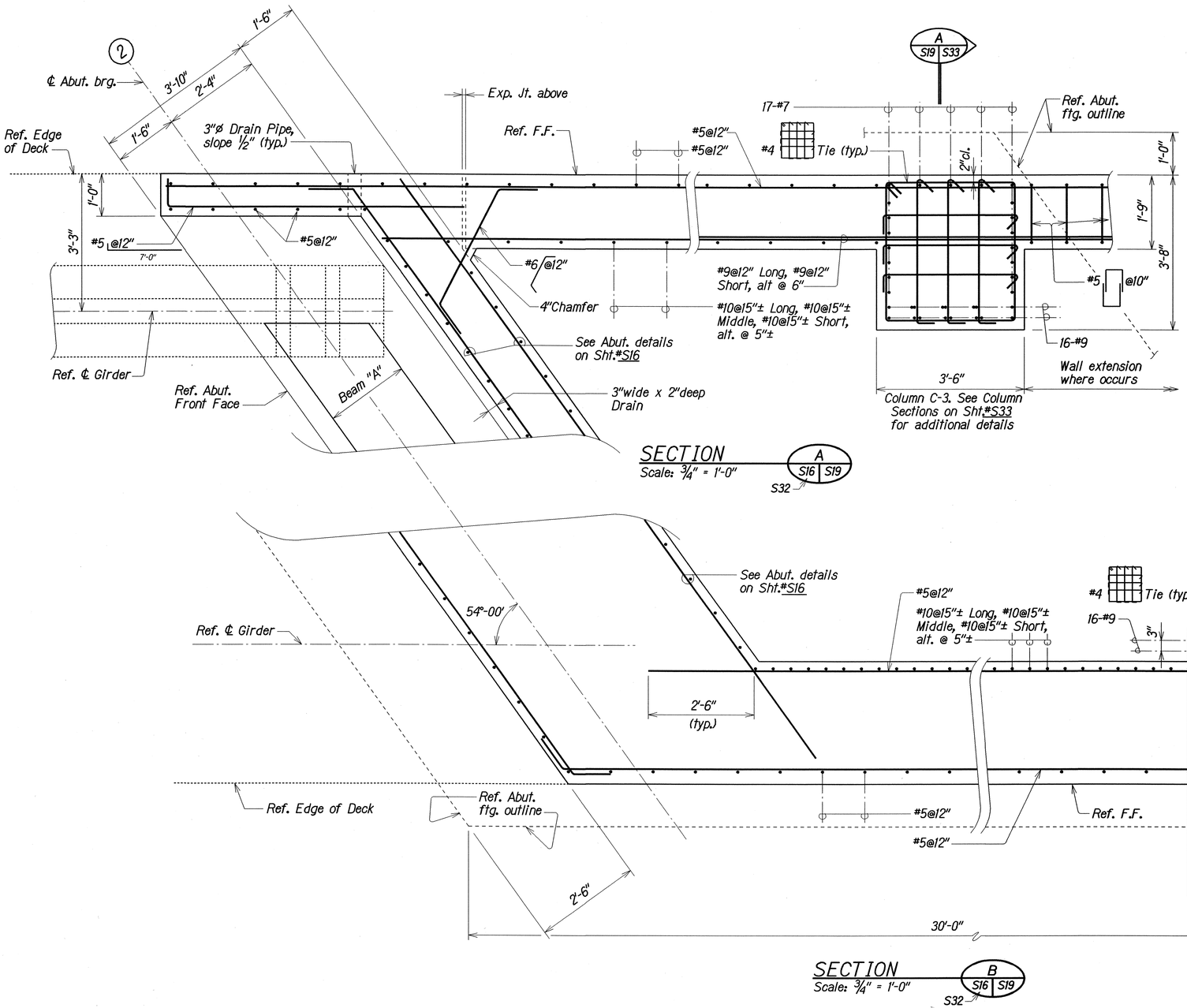

SECTION
Scale: 3/4" = 1'-0"
A S16 S19
S32

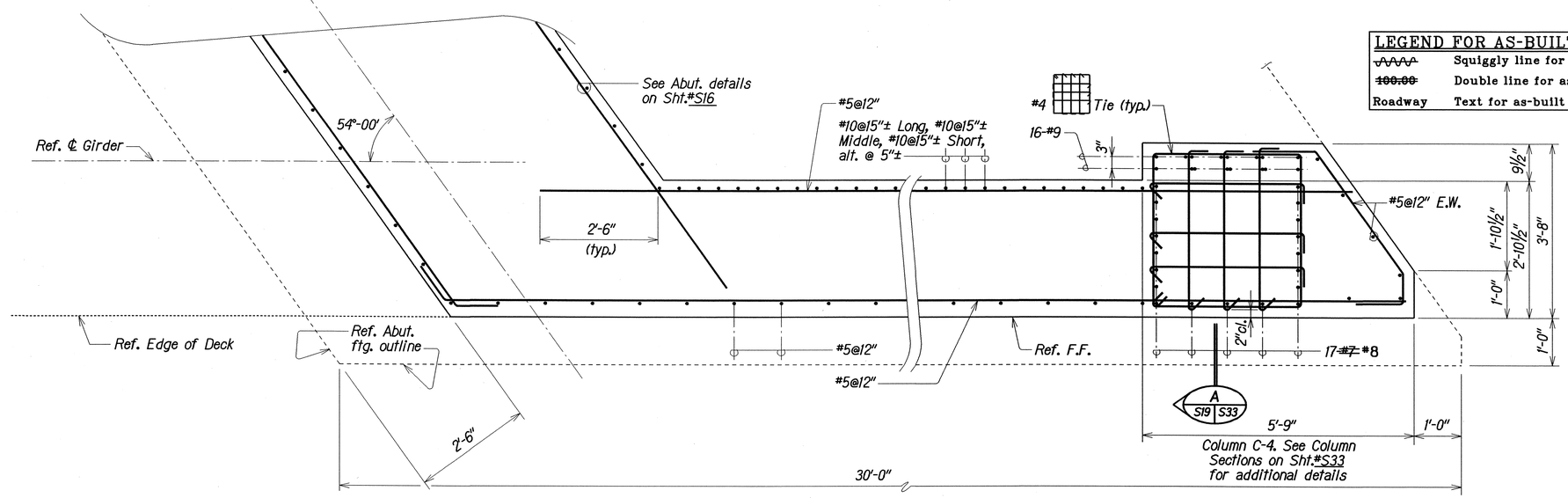

SECTION
Scale: 3/4" = 1'-0"
B S16 S19
S32

LEGEND FOR AS-BUILT POSTINGS	
~~	Squiggly line for as-built deletion
~~100.00~~	Double line for as-built deletion
Roadway	Text for as-built posting

SECTIONS THRU ABUTMENT NO. 2--AUWAIAKEAKUA STREAM BRIDGE

ORIGINAL PLAN	SURVEY PLOTTED BY	KSC	DATE	JUN 1998
	DRAWN BY			
	TRACED BY	MW		JUN 1998
NOTE BOOK	DESIGNED BY	JW		JUN 1998
	QUANTITIES BY	MW		JUN 1998
	CHECKED BY	CCO		JUN 1998
N00000, S19.dgn				

STATE OF HAWAII
DEPARTMENT OF TRANSPORTATION
HIGHWAYS DIVISION

POPOO AND AUWAIAKEAKUA STREAM BRIDGES
SECTIONS THRU ABUTMENT NO. 2--AUWAIAKEAKUA STREAM BRIDGE
HAWAII BELT ROAD
Replacement of Auwaiakeakua Bridge and Popoo Bridge
Fed. Aid Proj. No. BR-0190(13)

Scale: As Noted Date: Jul, 1998

SHEET No. S19 OF 41 SHEETS

"AS-BUILT"

FED. ROAD DIST. NO.	STATE	FED. AID PROJ. NO.	FISCAL YEAR	SHEET NO.	TOTAL SHEETS
HAWAII	HAW.	BR-0190(13)	1999	27	75

LEGEND FOR AS-BUILT POSTINGS

~~AAAA~~	Squiggly line for as-built deletion
~~100.00~~	Double line for as-built deletion
Roadway	Text for as-built posting

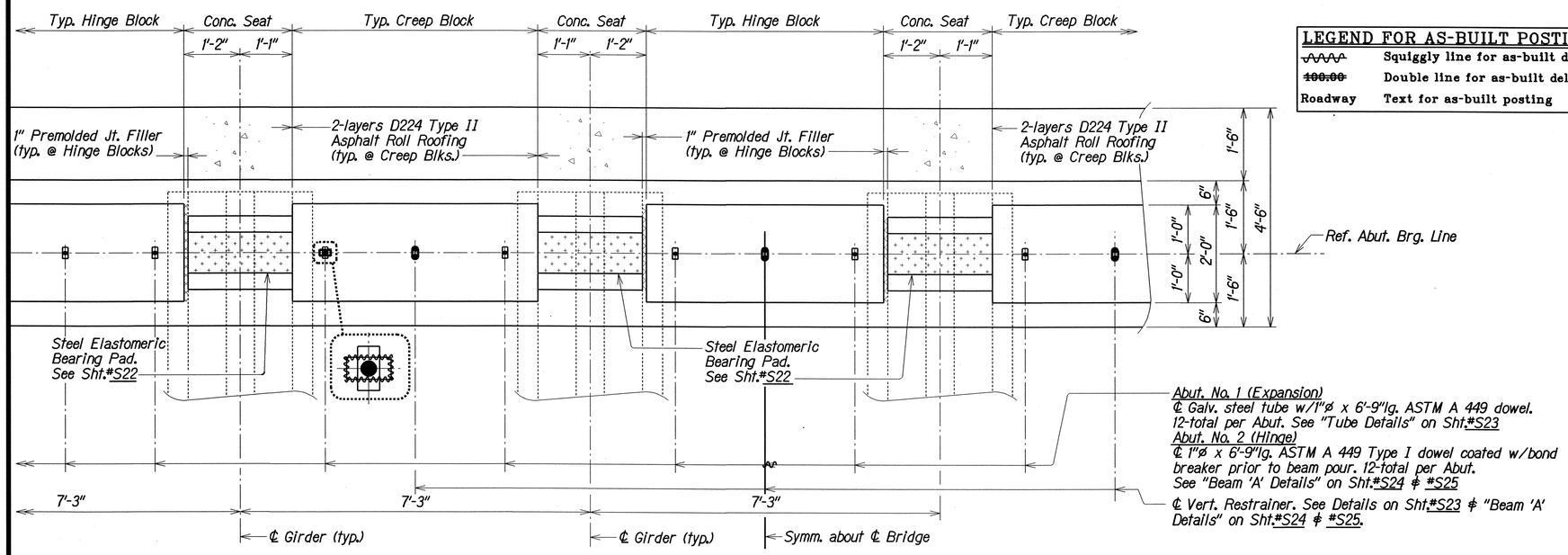

Abut. No. 1 (Expansion)
℄ Galv. steel tube w/1"ø x 6'-9"lg. ASTM A 449 dowel. 12-total per Abut. See "Tube Details" on Sht.#S23
Abut. No. 2 (Hinge)
℄ 1"ø x 6'-9"lg. ASTM A 449 Type I dowel coated w/bond breaker prior to beam pour. 12-total per Abut. See "Beam 'A' Details" on Sht.#S24 & #S25
℄ Vert. Restrainer. See Details on Sht.#S23 & "Beam 'A' Details" on Sht.#S24 & #S25.

PARTIAL PLAN--ABUTMENT NO. 1

Scale: 3/4" = 1'-0"

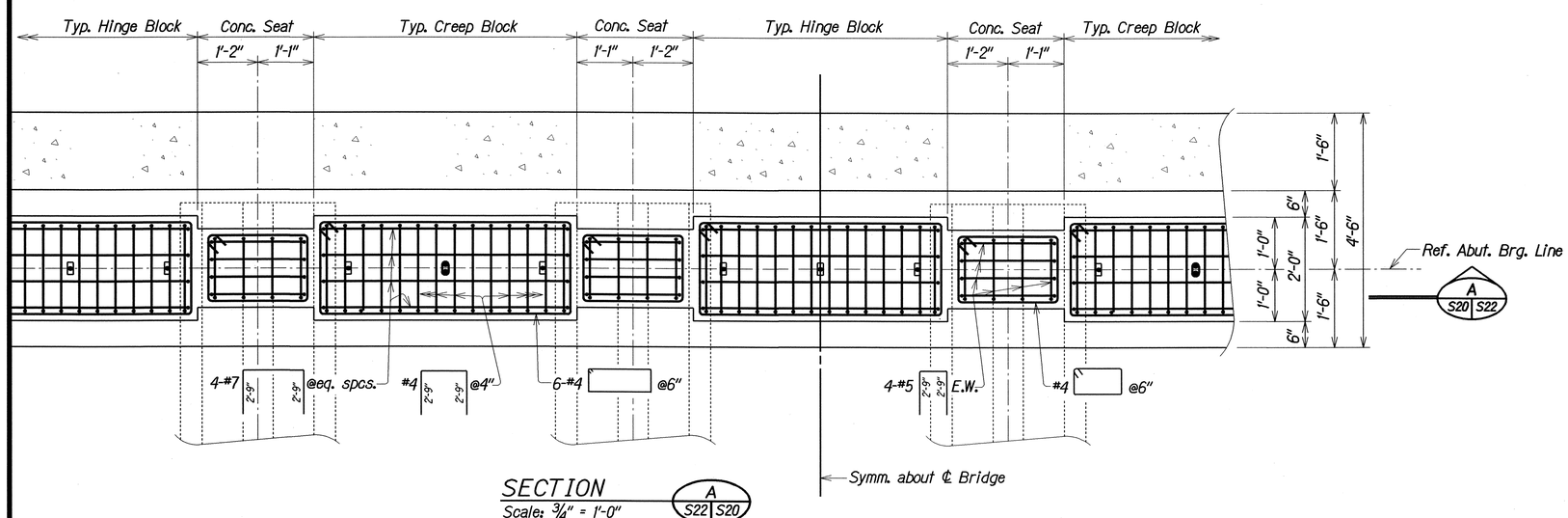

SECTION

Scale: 3/4" = 1'-0"

A S22 S20

CONCRETE SEAT ELEVATION AT ℄ BEARING AND SEAT SLOPE

GIRDER	ABUT. NO. 1	SEAT SLOPE	ABUT. NO. 2
G-1	2,520.52	- 5/16	2,517.62
G-2	2,520.66	- 5/16	2,517.76
G-3	2,520.81	- 5/16	2,517.91
G-4	2,520.81	- 5/16	2,517.91
G-5	2,520.66	- 5/16	2,517.76
G-6	2,520.52	- 5/16	2,517.62

CREEP BLOCK, HINGE BLOCK AND CONCRETE REINFORCING DETAILS-- POPOO STREAM BRIDGE

ORIGINAL PLAN			
	SURVEY PLOTTED BY	KSG	DATE JUN 1998
	DRAWN BY	. . . .	. . . .
	TRACED BY	MW	JUN 1998
NOTE BOOK	DESIGNED BY	MW	JUN 1998
	QUANTITIES BY	MW	JUN 1998
	CHECKED BY	RCD	JUN 1998

STATE OF HAWAII
DEPARTMENT OF TRANSPORTATION
HIGHWAYS DIVISION

POPOO AND AUWAIAKEAKUA STREAM BRIDGES
CREEP BLOCK, HINGE BLOCK AND CONCRETE SEAT REINF. DETAILS-POPOO STREAM BRIDGE
HAWAII BELT ROAD
Replacement of Auwaiakeakua Bridge and Popoo Bridge
Fed. Aid Proj. No. BR-0190(13)

Scale: As Noted — Date: Jul, 1998

SHEET No. S20 OF 41 SHEETS

"AS-BUILT"

DB1 - Bridge Design Section

FED. ROAD DIST. NO.	STATE	FED. AID PROJ. NO.	FISCAL YEAR	SHEET NO.	TOTAL SHEETS
HAWAII	HAW.	BR-0190(13)	1999	28	75

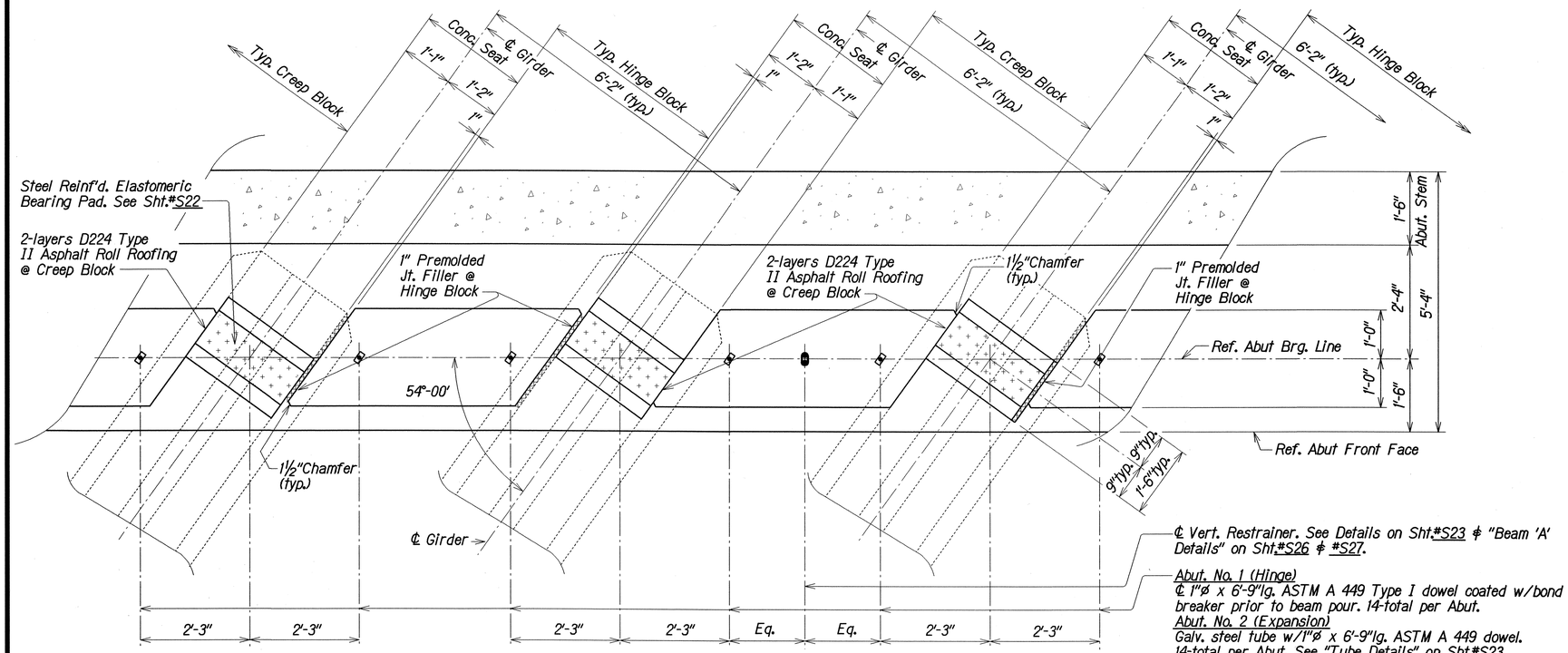

PARTIAL PLAN

Scale: 3/4" = 1'-0"

℄ Vert. Restrainer. See Details on Sht.#S23 & "Beam 'A' Details" on Sht.#S26 & #S27.

Abut. No. 1 (Hinge)
℄ 1"ø x 6'-9"lg. ASTM A 449 Type I dowel coated w/bond breaker prior to beam pour. 14-total per Abut.
Abut. No. 2 (Expansion)
Galv. steel tube w/1"ø x 6'-9"lg. ASTM A 449 dowel. 14-total per Abut. See "Tube Details" on Sht.#S23
See "Beam 'A' Details" on Sht.#S26 & #S27

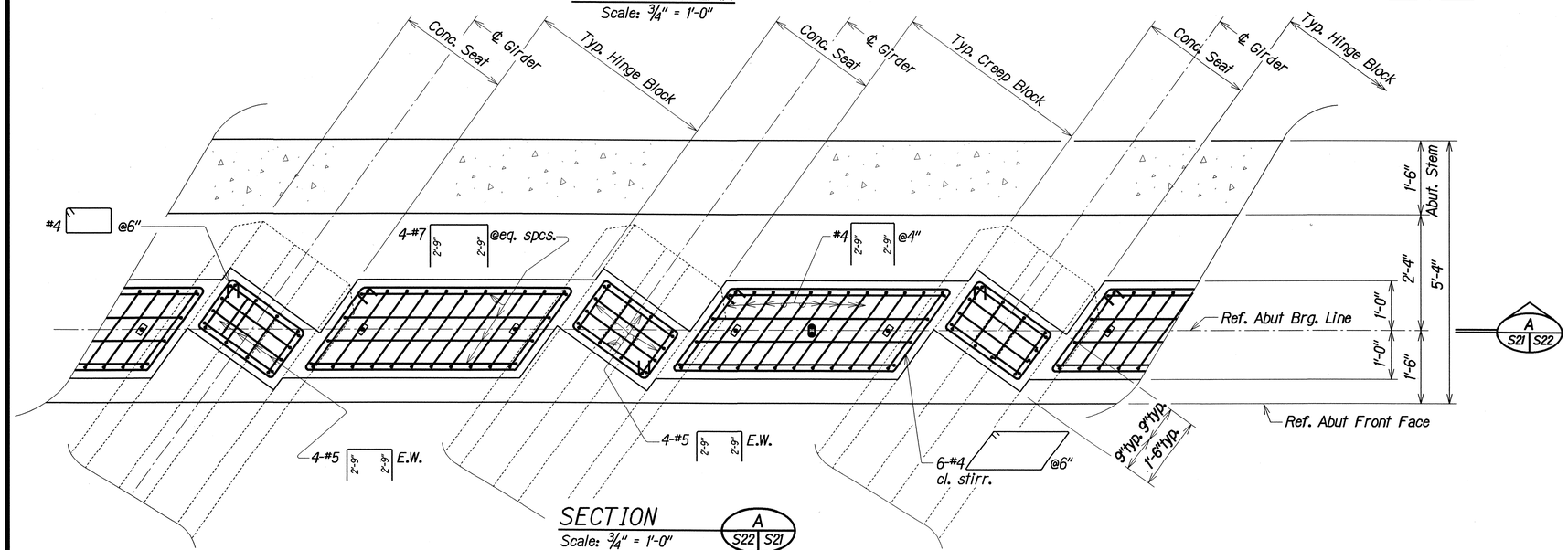

SECTION

Scale: 3/4" = 1'-0"

CREEP BLOCK, HINGE BLOCK AND CONCRETE SEAT REINFORCING DETAILS-- AUWAIAKEAKUA STREAM BRIDGE

CONCRETE SEAT ELEVATION AT ℄ BEARING AND SEAT SLOPE

GIRDER	ABUT. NO. 1	SEAT SLOPE	ABUT. NO. 2
G-1	~~2,513.09~~ 2514.38 +	7/16	2516.47 ~~2,515.08~~
G-2	~~2,513.27~~ 2514.48 +	7/16	2516.67 ~~2,515.31~~
G-3	~~2,513.45~~ 2514.78 +	7/16	2516.87 ~~2,515.53~~
G-4	~~2,513.63~~ 2514.98 +	7/16	2517.08 ~~2,515.76~~
G-5	~~2,513.56~~ 2514.94 +	7/16	2517.03 ~~2,515.74~~
G-6	~~2,513.50~~ 2514.90 +	7/16	2516.99 ~~2,515.72~~
G-7	~~2,513.44~~ 2514.85 +	7/16	2516.94 ~~2,515.71~~

LEGEND FOR AS-BUILT POSTINGS

~~WWW~~	Squiggly line for as-built deletion
~~100.00~~	Double line for as-built deletion
Roadway	Text for as-built posting

STATE OF HAWAII
DEPARTMENT OF TRANSPORTATION
HIGHWAYS DIVISION

POPOO AND AUWAIAKEAKUA STREAM BRIDGES
CREEP BLOCK, HINGE BLOCK & CONCRETE SEAT REINF. DETAILS-AUWAIAKEAKUA BRIDGE

HAWAII BELT ROAD
Replacement of Auwaiakeakua Bridge and Popoo Bridge
Fed. Aid Proj. No. BR-0190(13)

Scale: As Noted — Date: Jul, 1998

SHEET No. S21 OF 41 SHEETS

SURVEY PLOTTED BY	KSC		DATE JUN 1998
DRAWN BY			JUN 1998
TRACED BY	JNW		JUN 1998
DESIGNED BY	JNW		JUN 1998
QUANTITIES BY	JNW		JUN 1998
CHECKED BY	DCO		JUN 1998

ORIGINAL PLAN — NOTE BOOK N00000_S21

"AS-BUILT"

DB1 - Bridge Design Section

FED. ROAD DIST. NO.	STATE	FED. AID PROJ. NO.	FISCAL YEAR	SHEET NO.	TOTAL SHEETS
HAWAII	HAW.	BR-0190(13)	1999	29	75

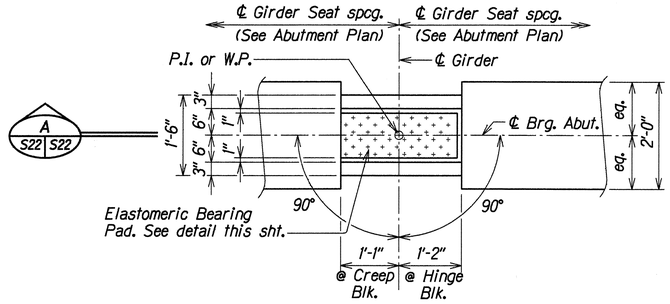

PARTIAL PLAN--POPOO STREAM BRIDGE

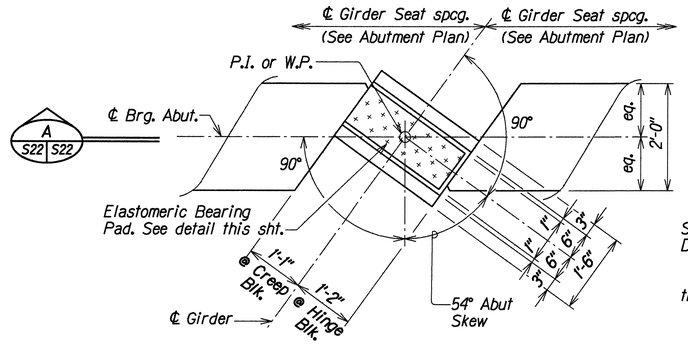

PARTIAL PLAN--AUWAIAKEAKUA STREAM BRIDGE

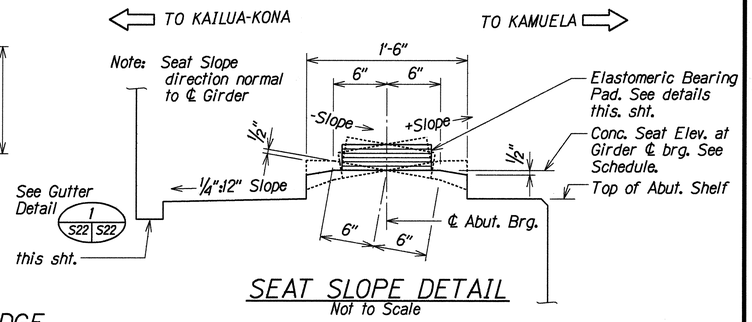

SEAT SLOPE DETAIL

Not to Scale

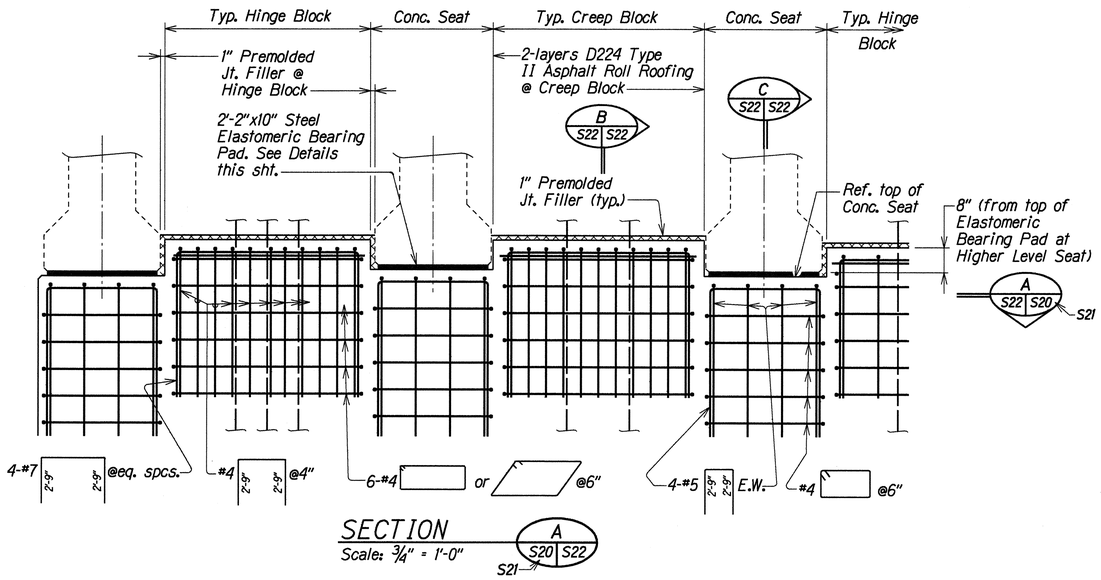

SECTION

Scale: 3/4" = 1'-0"

A S20 S22 S21

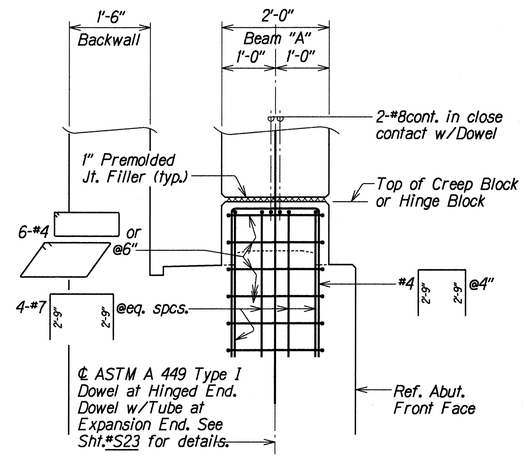

SECTION

Scale: 3/4" = 1'-0"

B S22 S22

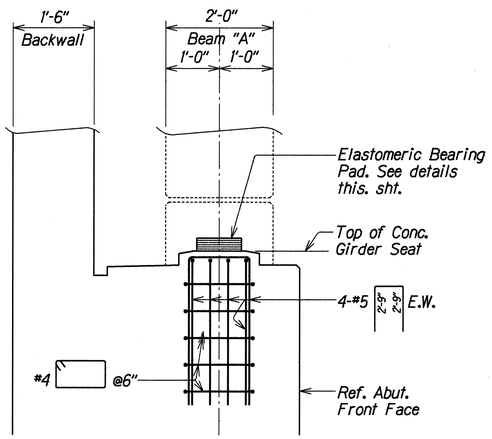

SECTION

Scale: 3/4" = 1'-0"

C S22 S22

CONCRETE SEAT, HINGE BLOCK AND CREEP BLOCK DETAILS

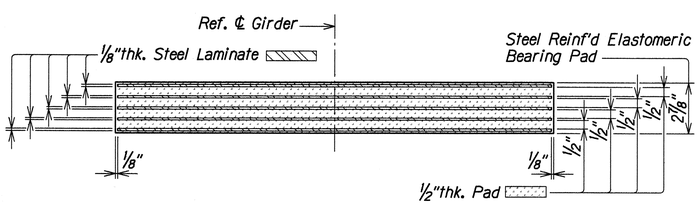

AT EXPANSION BEARING

POPOO STREAM BRIDGE--ABUTMENT NO. 1,
AUWAIAKEAKUA STREAM BRIDGE--ABUTMENT NO. 2

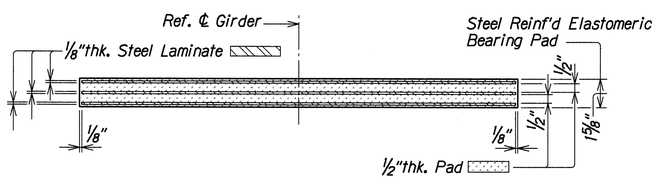

AT HINGED BEARING

POPOO STREAM BRIDGE--ABUTMENT NO. 2,
AUWAIAKEAKUA STREAM BRIDGE--ABUTMENT NO. 1

ELASTOMERIC BEARING PAD DETAIL

Not to Scale

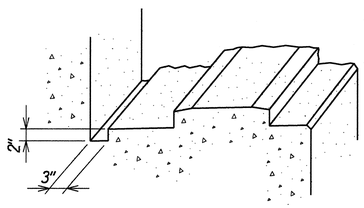

GUTTER DETAIL

Not to Scale

I S22 S22

ORIGINAL PLAN	SURVEY PLOTTED BY	KSG	DATE JUN 1998
	DRAWN BY		
	TRACED BY		
NOTE BOOK	DESIGNED BY	JWW	JUN 1998
	PLANS BY	JWW	JUN 1998
	QUANTITIES BY	JWW	JUN 1998
40000-S22	CHECKED BY	KKO	JUN 1998

STATE OF HAWAII
DEPARTMENT OF TRANSPORTATION
HIGHWAYS DIVISION

POPOO AND AUWAIAKEAKUA STREAM BRIDGES
CONCRETE SEAT, HINGE BLOCK, CREEP BLOCK, GUTTER AND ELASTOMERIC BEARING PAD DETAILS

HAWAII BELT ROAD
Replacement of Auwaiakeakua Bridge and Popoo Bridge
Fed. Aid Proj. No. BR-0190(13)

Scale: As Noted — Date: Jul. 1998

SHEET No. S22 OF 41 SHEETS

FED. ROAD DIST. NO.	STATE	FED. AID PROJ. NO.	FISCAL YEAR	SHEET NO.	TOTAL SHEETS
HAWAII	HAW.	BR-0190(13)	1999	30	75

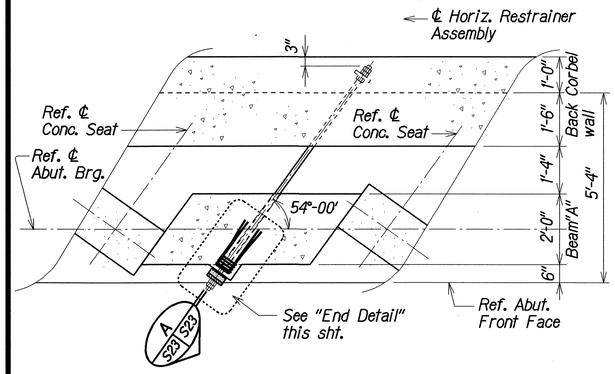

PARTIAL PLAN--AUWAIAKEAKUA STREAM BRIDGE

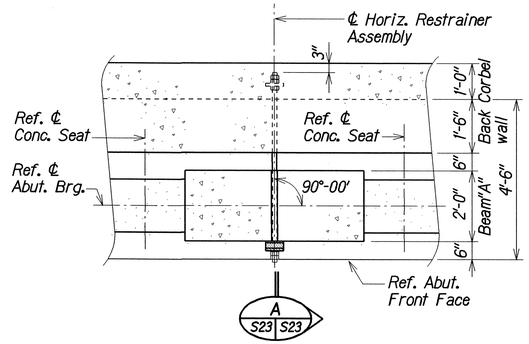

PARTIAL PLAN--POPOO STREAM BRIDGE

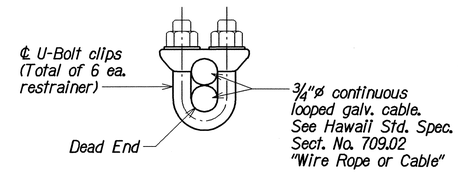

U-BOLT CLIP DETAIL

Not to Scale

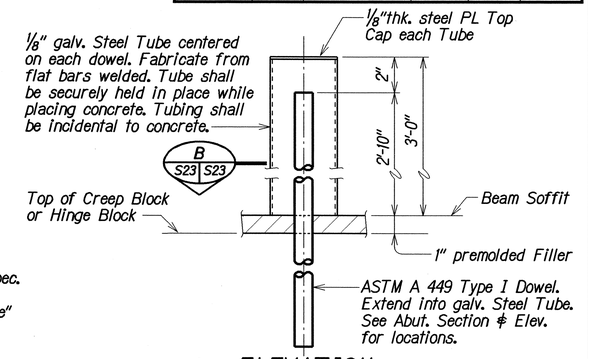

ELEVATION

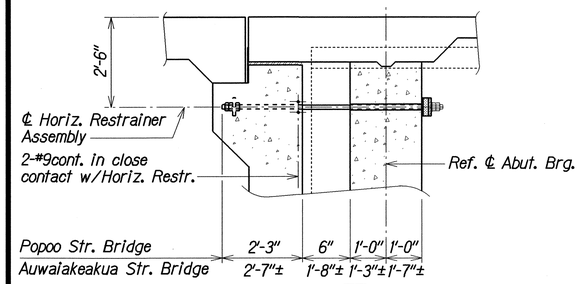

SECTION

Scale: ¾" = 1'-0"

A S23 S23

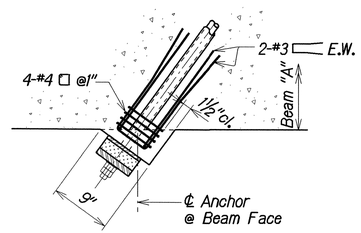

END DETAIL-- AUWAIAKEAKUA STR. BRIDGE

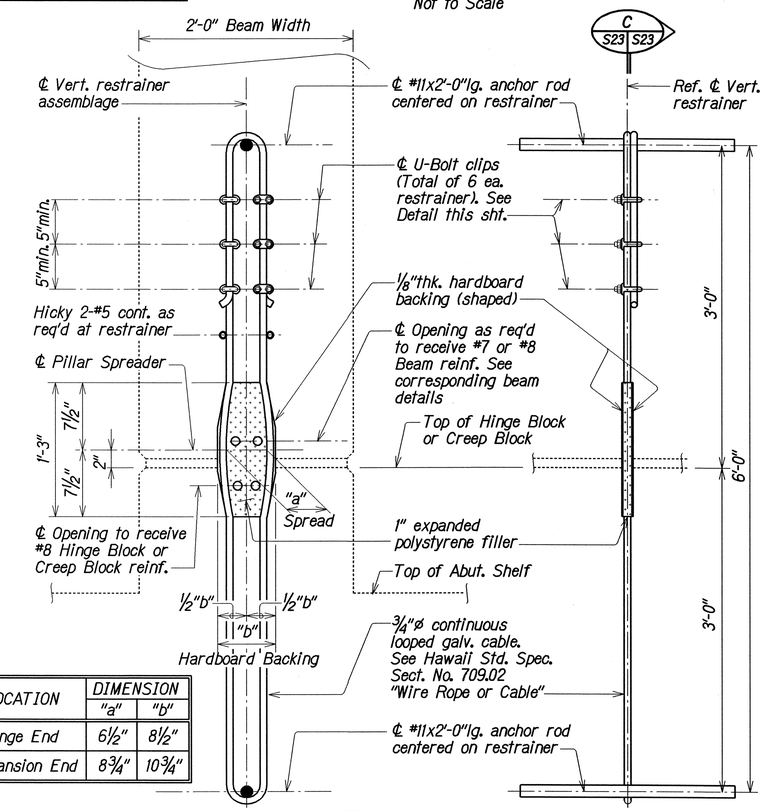

LOCATION	DIMENSION "a"	DIMENSION "b"
Hinge End	6½"	8½"
Expansion End	8¾"	10¾"

SECTION

Scale: ~~¾"~~ 1½" = 1'-0"

C S23 S23

ELEVATION

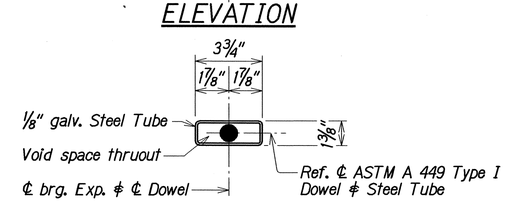

SECTION

Scale: 3" = 1'-0"

B S23 S23

1"ø DOWEL AND TUBE DETAILS

AT EXPANSION

Not to Scale

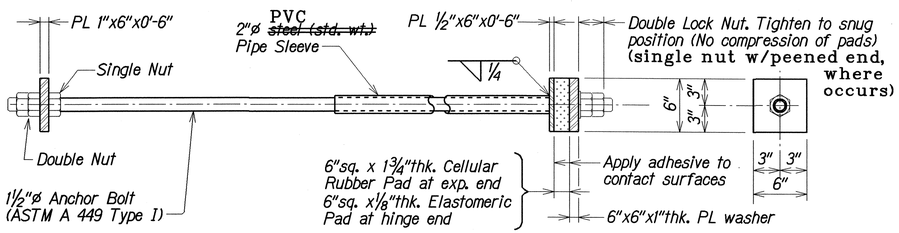

HORIZONTAL RESTRAINER ASSEMBLY DETAILS

Not to Scale

HORIZONTAL RESTRAINER DETAILS

LEGEND FOR AS-BUILT POSTINGS	
~~	Squiggly line for as-built deletion
~~100.00~~	Double line for as-built deletion
Roadway	Text for as-built posting

NOTES:

1. Restrainer assemblage incidental to concrete and will not be paid for separately.
2. Restrainer assemblage shall be securely held in place while placing concrete.
3. Galvanize all hardware after fabrication.
4. Cellular Rubber Pad shall conform to ASTM D 1056, Type 1, Grade IC5.

VERTICAL RESTRAINER ASSEMBLY DETAILS

Scale: 1½" = 1'-0"

ORIGINAL PLAN	SURVEY PLOTTED BY KSG	DATE JUN 1998
	DRAWN BY	
	TRACED BY	JUN 1998
NOTE BOOK	DESIGNED BY WW	JUN 1998
	QUANTITIES BY WW	JUN 1998
N/0000, S23	CHECKED BY DCO	JUN 1998

STATE OF HAWAII
DEPARTMENT OF TRANSPORTATION
HIGHWAYS DIVISION

POPOO AND AUWAIAKEAKUA STREAM BRIDGES
HORIZONTAL AND VERTICAL RESTRAINER, 1"ø DOWEL AND TUBE DETAILS

HAWAII BELT ROAD
Replacement of Auwaiakeakua Bridge and Popoo Bridge
Fed. Aid Proj. No. BR-0190(13)

Scale: As Noted Date: Jul, 1998

SHEET No. S23 OF 41 SHEETS

"AS-BUILT"

FED. ROAD DIST. NO.	STATE	FED. AID PROJ. NO.	FISCAL YEAR	SHEET NO.	TOTAL SHEETS
HAWAII	HAW.	BR-0190(13)	1999	31	75

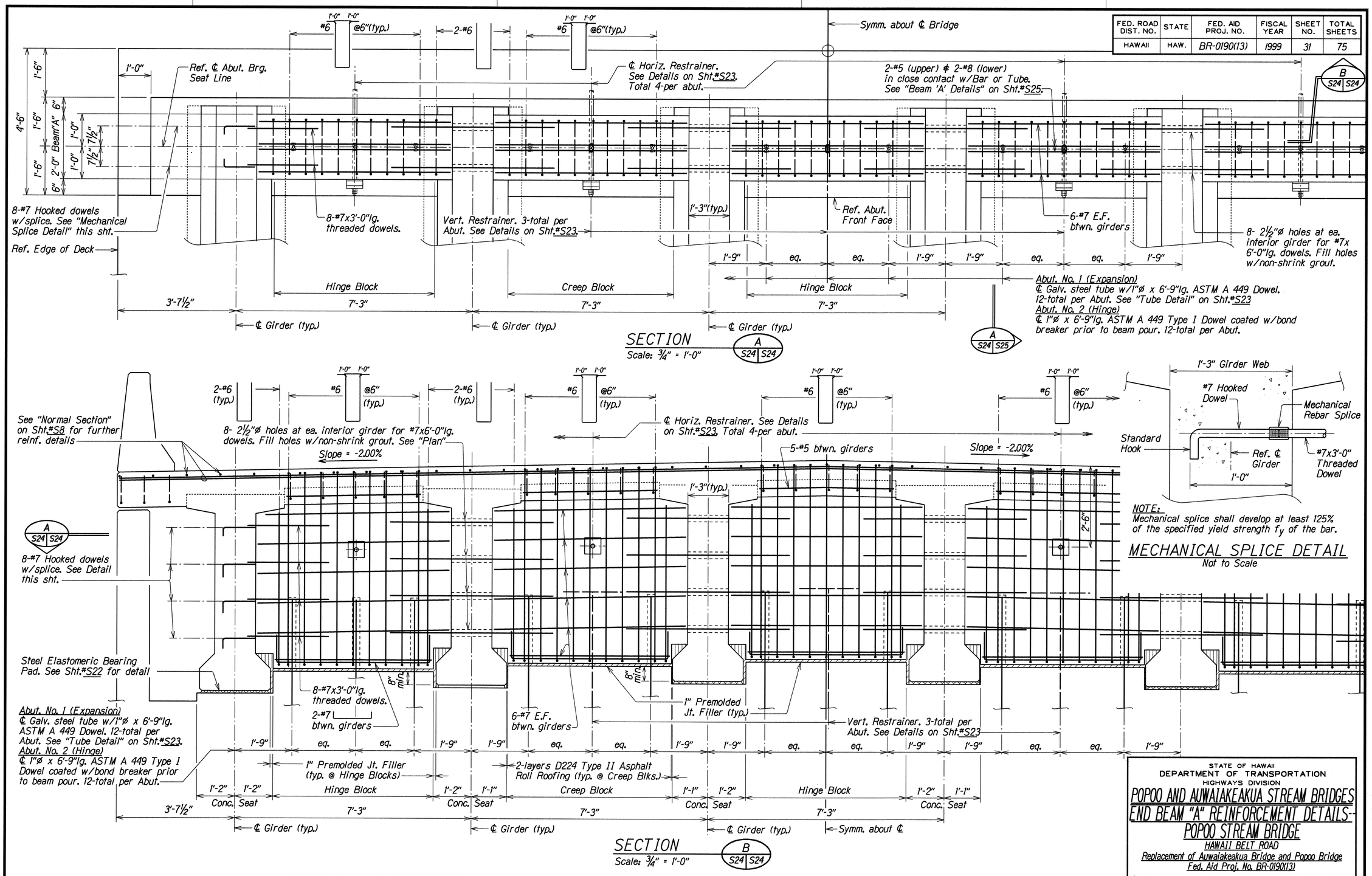

ORIGINAL PLAN	SURVEY PLOTTED BY	KSG	DATE	JUN 1998
	DRAWN BY			
	TRACED BY	MW		JUN 1998
NOTE BOOK	DESIGNED BY	MW		JUN 1998
	QUANTITIES BY	MW		JUN 1998
	CHECKED BY	DCO		JUN 1998

40POO_S24.dgn

STATE OF HAWAII
DEPARTMENT OF TRANSPORTATION
HIGHWAYS DIVISION

POPOO AND AUWAIAKEAKUA STREAM BRIDGES
END BEAM "A" REINFORCEMENT DETAILS--
POPOO STREAM BRIDGE

HAWAII BELT ROAD
Replacement of Auwaiakeakua Bridge and Popoo Bridge
Fed. Aid Proj. No. BR-0190(13)

Scale: As Noted — Date: Jul. 1998

TYPICAL ABUTMENT END BEAM "A" REINFORCEMENT DETAILS--POPOO STREAM BRIDGE

SHEET No. S24 OF 41 SHEETS

FED. ROAD DIST. NO.	STATE	FED. AID PROJ. NO.	FISCAL YEAR	SHEET NO.	TOTAL SHEETS
HAWAII	HAW.	BR-0190(13)	1999	32	75

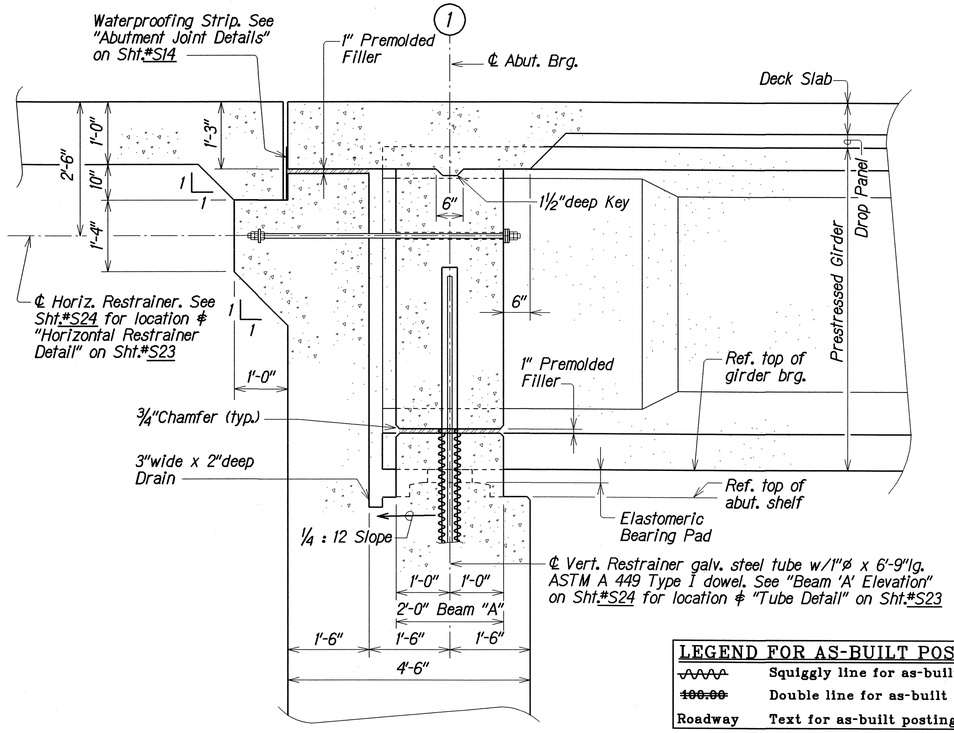

ABUTMENT NO. 1 (EXPANSION)

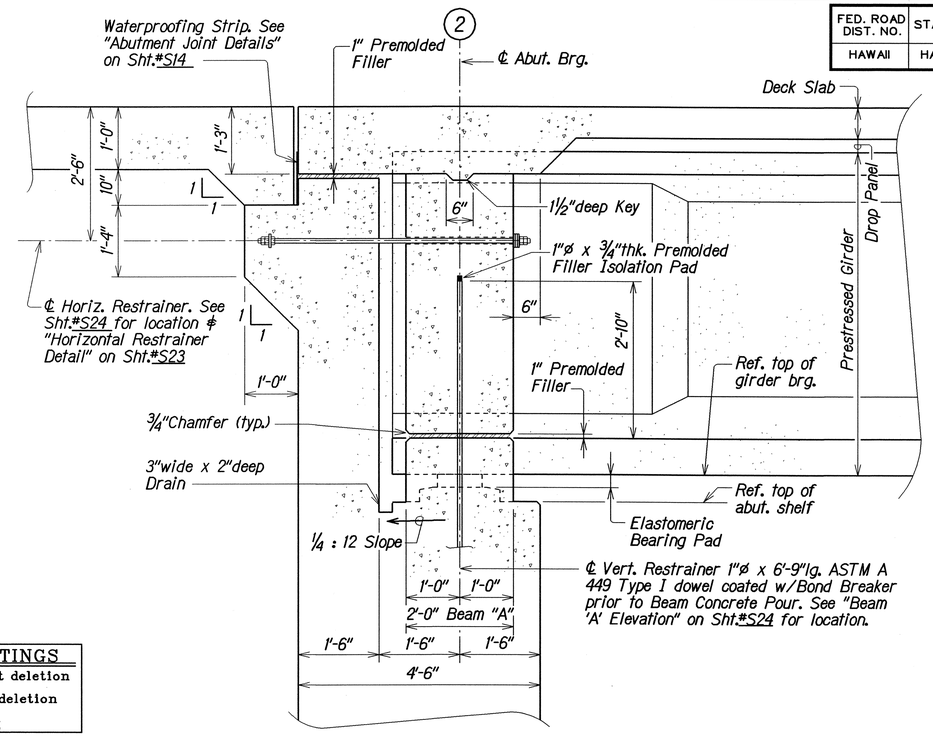

ABUTMENT NO. 2 (HINGE)

LEGEND FOR AS-BUILT POSTINGS	
~~	Squiggly line for as-built deletion
~~100.00~~	Double line for as-built deletion
Roadway	Text for as-built posting

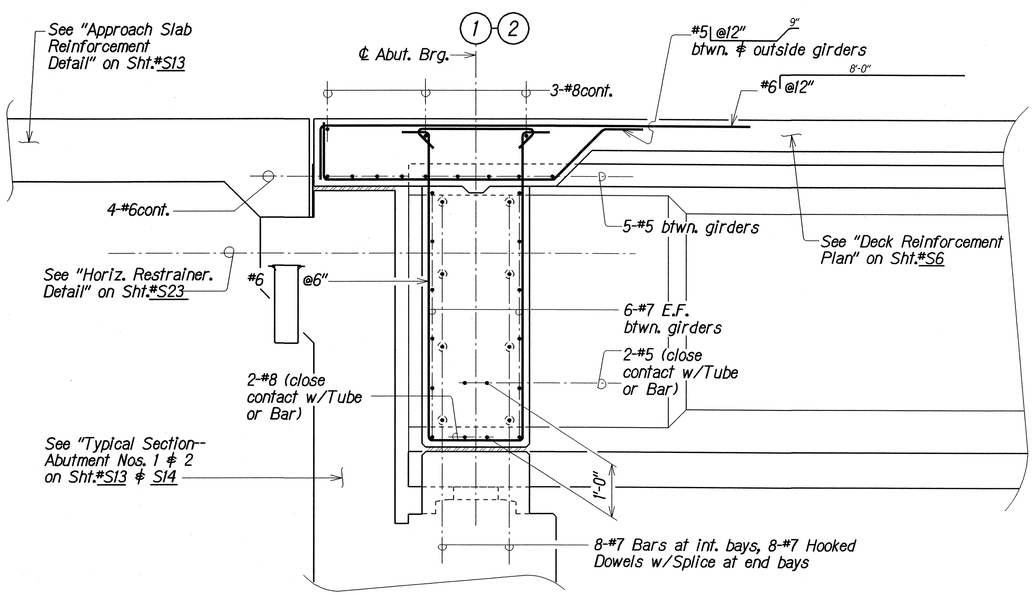

REINFORCEMENT DETAIL

Scale: ¾" = 1'-0"

END BEAM "A" DETAILS--POPOO STREAM BRIDGE

ORIGINAL PLAN			
	SURVEY PLOTTED BY		DATE
	DRAWN BY	KSG	JUN 1998
	TRACED BY	JWW	JUN 1998
	DESIGNED BY	JWW	JUN 1998
NOTE BOOK	QUANTITIES BY	DCO	JUN 1998
NO.000 S75	CHECKED BY		

STATE OF HAWAII
DEPARTMENT OF TRANSPORTATION
HIGHWAYS DIVISION

POPOO & AUWAIAKEAKUA STREAM BRIDGES
END BEAM "A" DETAILS--
POPOO STREAM BRIDGE

HAWAII BELT ROAD
Replacement of Auwaiakeakua Bridge and Popoo Bridge
Fed. Aid Proj. No. BR-0190(13)

Scale: As Noted Date: Jul, 1998

SHEET No. S25 OF 41 SHEETS

"AS-BUILT"

DB1 - Bridge Design Section

FED. ROAD DIST. NO.	STATE	FED. AID PROJ. NO.	FISCAL YEAR	SHEET NO.	TOTAL SHEETS
HAWAII	HAW.	BR-0190(13)	1999	33	75

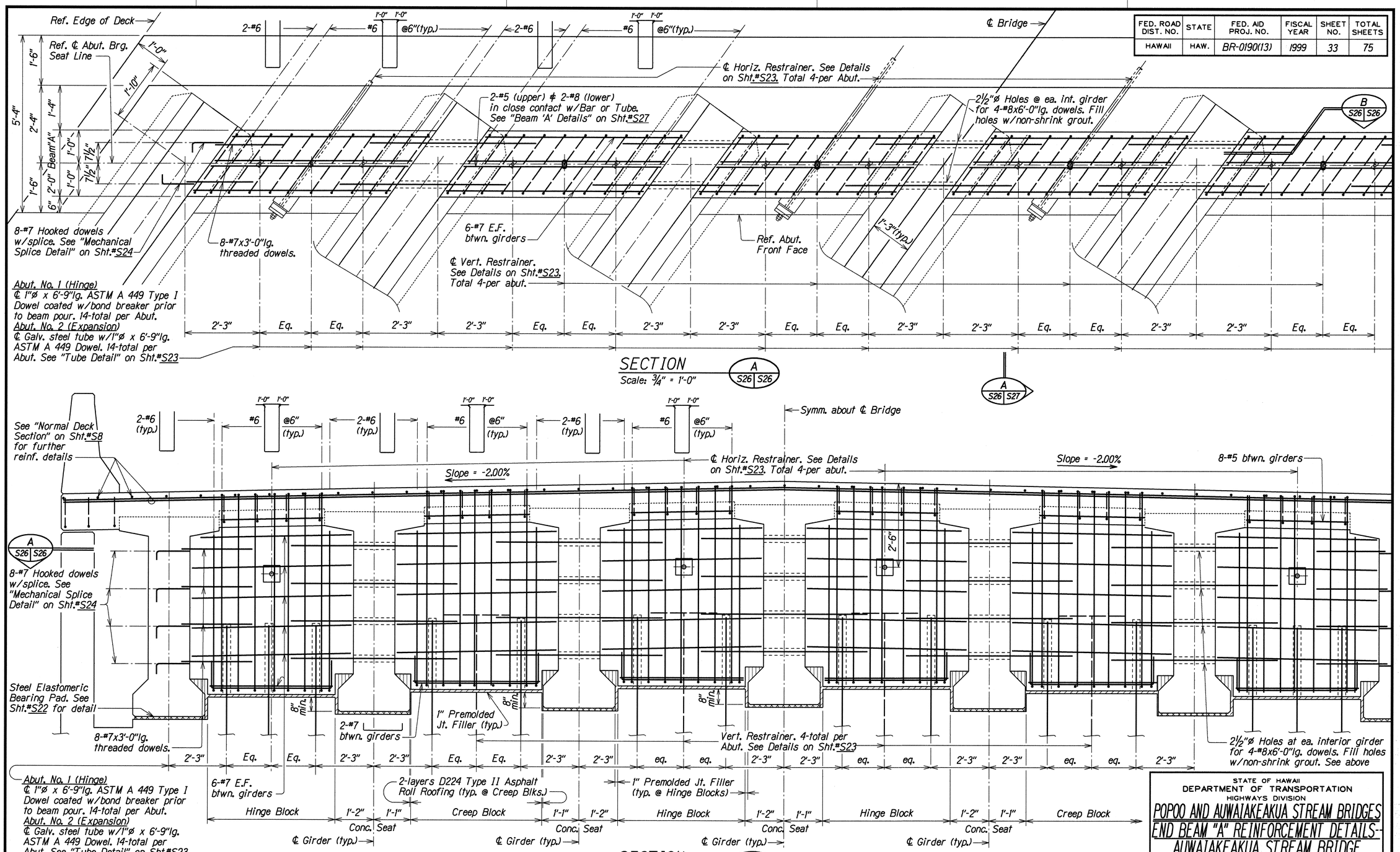

ORIGINAL PLAN	SURVEY PLOTTED BY	KSG	DATE JUN 1998
	DRAWN BY		
	TRACED BY	JWW	JUN 1998
NOTE BOOK	DESIGNED BY	JWW	JUN 1998
	QUANTITIES BY	JWW	JUN 1998
40000_S26.dgn	CHECKED BY	DCD	JUN 1998

STATE OF HAWAII
DEPARTMENT OF TRANSPORTATION
HIGHWAYS DIVISION

POPOO AND AUWAIAKEAKUA STREAM BRIDGES
END BEAM "A" REINFORCEMENT DETAILS--
AUWAIAKEAKUA STREAM BRIDGE

HAWAII BELT ROAD
Replacement of Auwaiakeakua Bridge and Popoo Bridge
Fed. Aid Proj. No. BR-0190(13)

Scale: As Noted — Date: Jul. 1998

END BEAM "A" REINFORCEMENT DETAILS--AUWAIAKEAKUA STREAM BRIDGE

FED. ROAD DIST. NO.	STATE	FED. AID PROJ. NO.	FISCAL YEAR	SHEET NO.	TOTAL SHEETS
HAWAII	HAW.	BR-0190(13)	1999	34	75

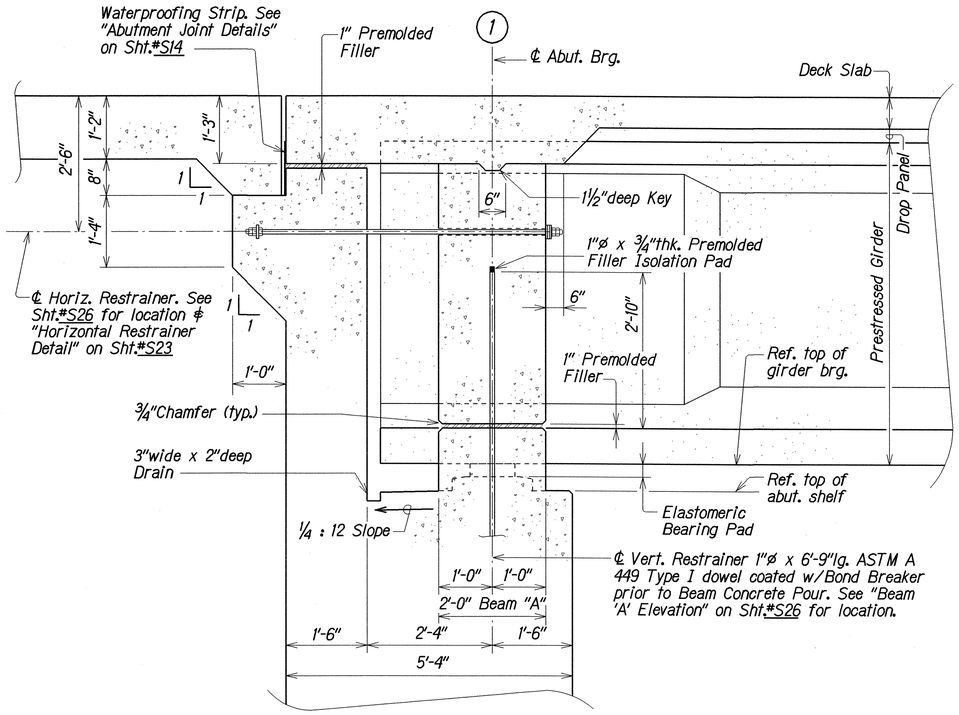

ABUTMENT NO. 1 (HINGE)

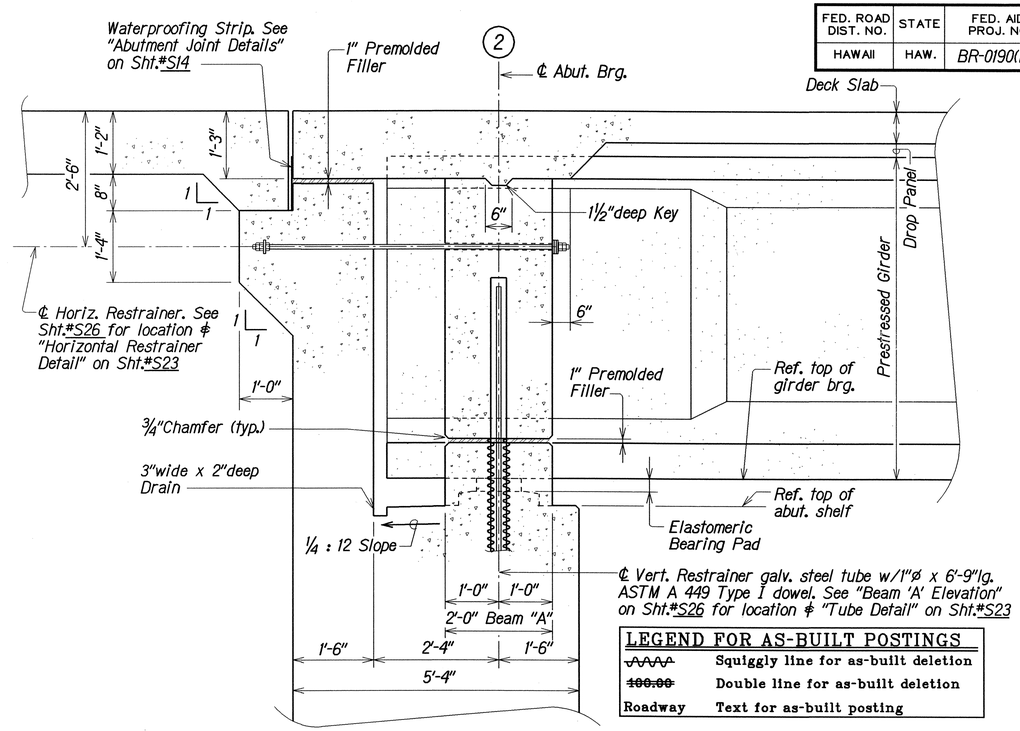

ABUTMENT NO. 2 (EXPANSION)

LEGEND FOR AS-BUILT POSTINGS	
∿∿∿	Squiggly line for as-built deletion
~~100.00~~	Double line for as-built deletion
Roadway	Text for as-built posting

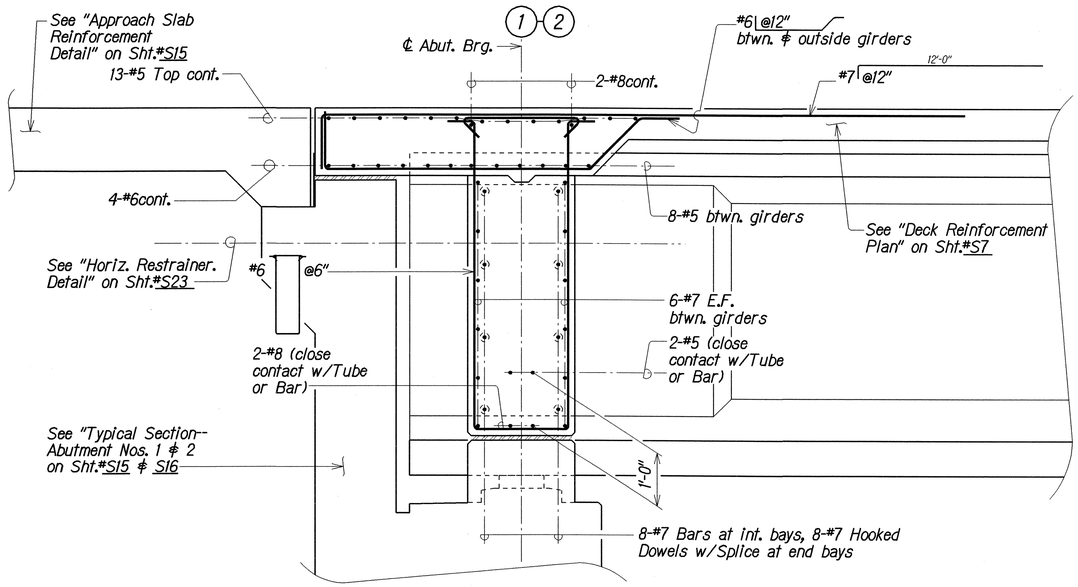

REINFORCEMENT DETAIL

Scale: ¾" = 1'-0"

ORIGINAL PLAN			
NOTE BOOK	SURVEY PLOTTED BY	KSG	JUN 1998
	DRAWN BY		
	TRACED BY	JNW	JUN 1998
	DESIGNED BY	JNW	JUN 1998
	QUANTITIES BY	KSG	JUN 1998
popoo_s27.dgn	CHECKED BY		

STATE OF HAWAII
DEPARTMENT OF TRANSPORTATION
HIGHWAYS DIVISION

POPOO & AUWAIAKEAKUA STREAM BRIDGES

END BEAM "A" DETAILS--
AUWAIAKEAKUA STREAM BRIDGE

HAWAII BELT ROAD
Replacement of Auwaiakeakua Bridge and Popoo Bridge
Fed. Aid Proj. No. BR-0190(13)

Scale: As Noted Date: Jul. 1998

SHEET No. S27 OF 41 SHEETS

END BEAM "A" DETAILS--AUWAIAKEAKUA STREAM BRIDGE

"AS-BUILT"

FED. ROAD DIST. NO.	STATE	FED. AID PROJ. NO.	FISCAL YEAR	SHEET NO.	TOTAL SHEETS
HAWAII	HAW.	BR-1090(13)	1999	35	75

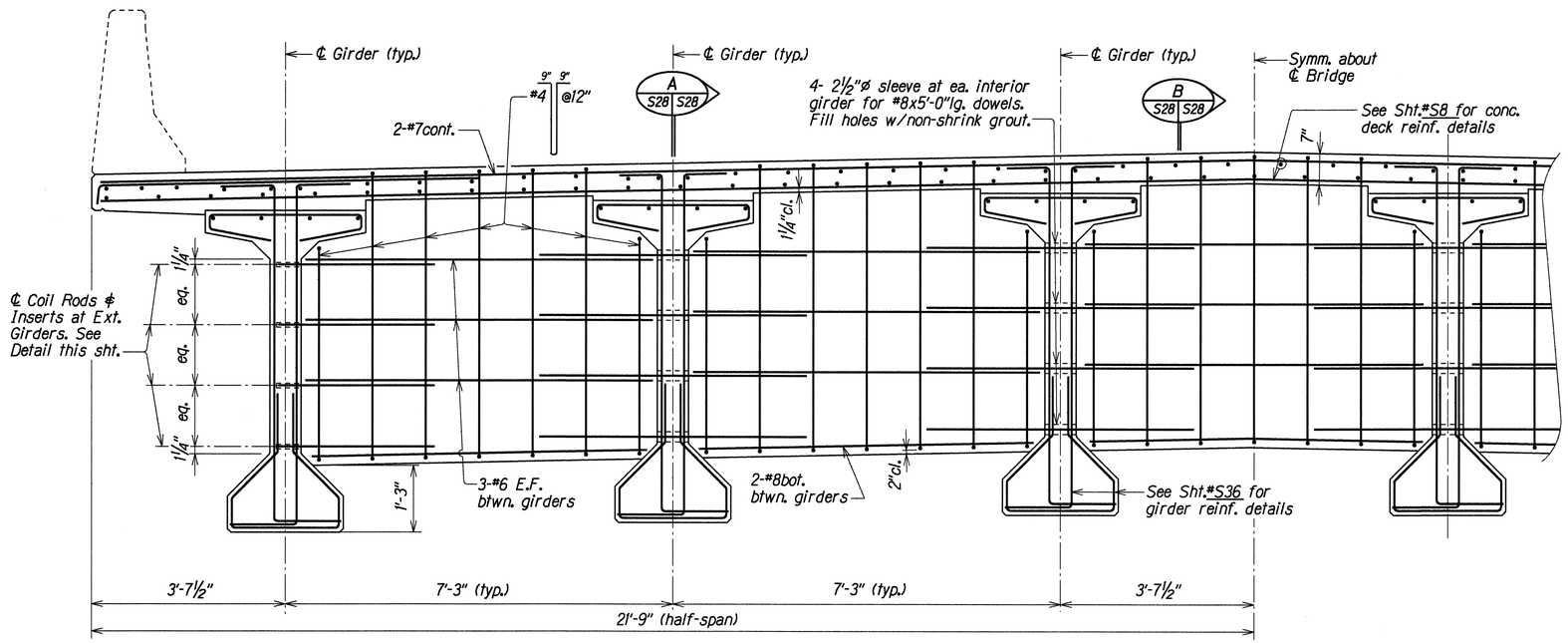

BEAM "B" PARTIAL ELEVATION--POPOO STREAM BRIDGE

Scale: ¾" = 1'-0"

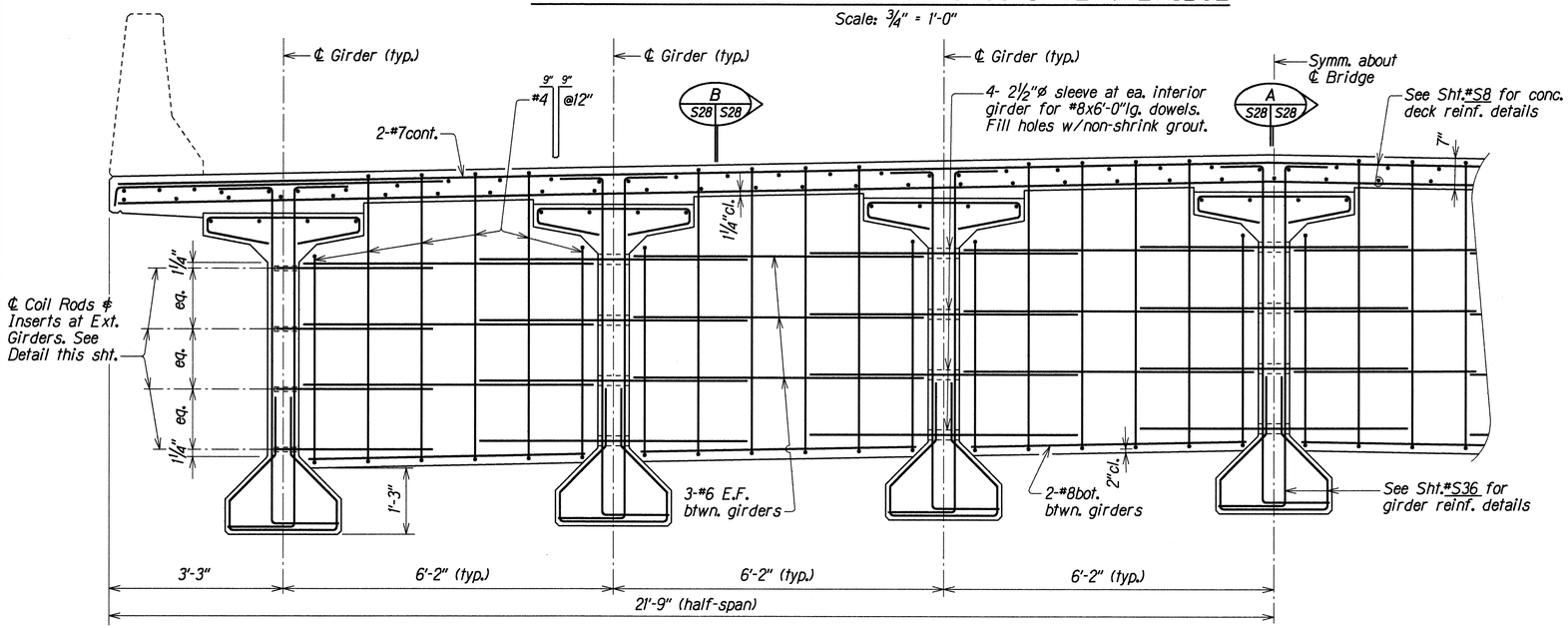

BEAM "B" PARTIAL ELEVATION--AUWAIAKEAKUA STREAM BRIDGE

Scale: ¾" = 1'-0"

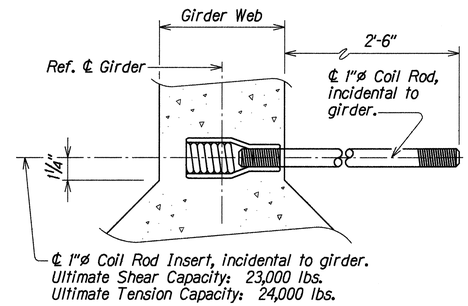

TYPICAL INSERT DETAIL

Scale: 3" = 1'-0"

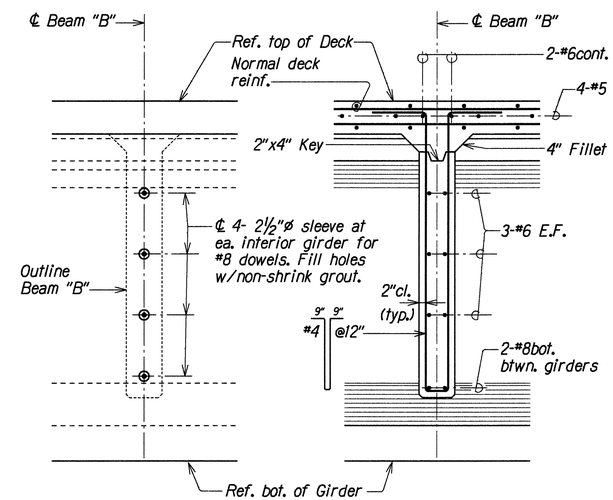

SECTION A S28 S28

Scale: ¾" = 1'-0"

SECTION B S28 S28

Scale: ¾" = 1'-0"

INTERMEDIATE DIAPHRAGM BEAM "B" DETAILS

ORIGINAL PLAN	SURVEY PLOTTED BY KSC DATE JUN 1998
	DRAWN BY " " " "
NOTE BOOK	TRACED BY JWW JUN 1998
	DESIGNED BY JWW JUN 1998
	QUANTITIES BY JWW JUN 1998
N0P000-S28	CHECKED BY DOD JUN 1998

STATE OF HAWAII
DEPARTMENT OF TRANSPORTATION
HIGHWAYS DIVISION

POPOO AND AUWAIAKEAKUA STREAM BRIDGES
INTERMEDIATE DIAPHRAGM BEAM "B" DETAILS
HAWAII BELT ROAD
Replacement of Auwaiakeakua Bridge and Popoo Bridge
Fed. Aid Proj. No. BR-1090(13)

Scale: As Noted Date: Jul. 1998

SHEET No. S28 OF 41 SHEETS

FED. ROAD DIST. NO.	STATE	FED. AID PROJ. NO.	FISCAL YEAR	SHEET NO.	TOTAL SHEETS
HAWAII	HAW.	BR-0190(13)	1999	36	75

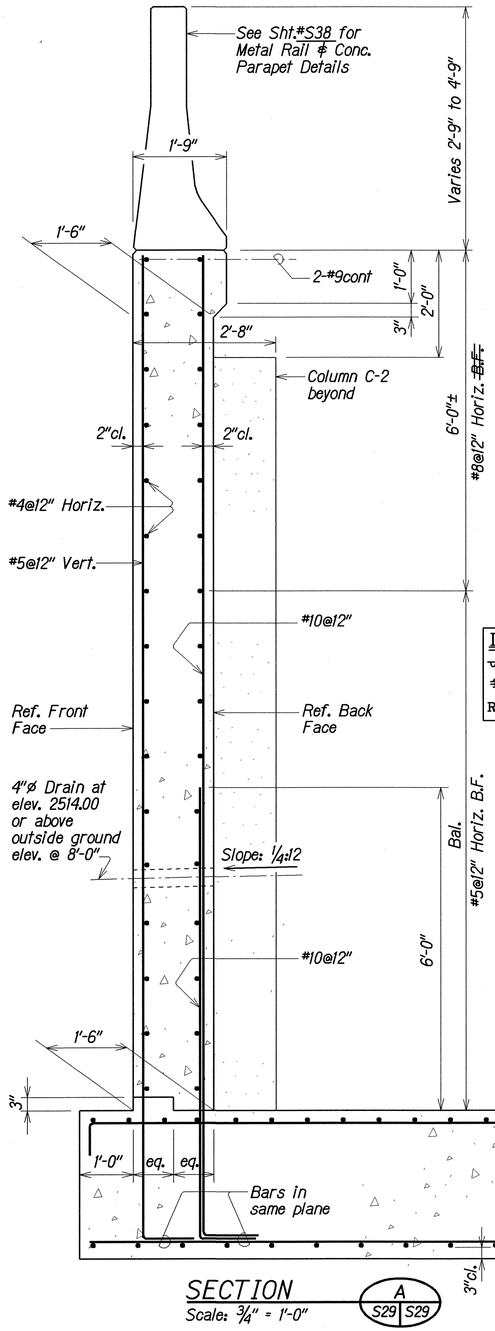

SECTION (A S29 | S29)
Scale: 3/4" = 1'-0"

LEGEND FOR AS-BUILT POSTINGS	
∧∧∧∧	Squiggly line for as-built deletion
~~100.00~~	Double line for as-built deletion
Roadway	Text for as-built posting

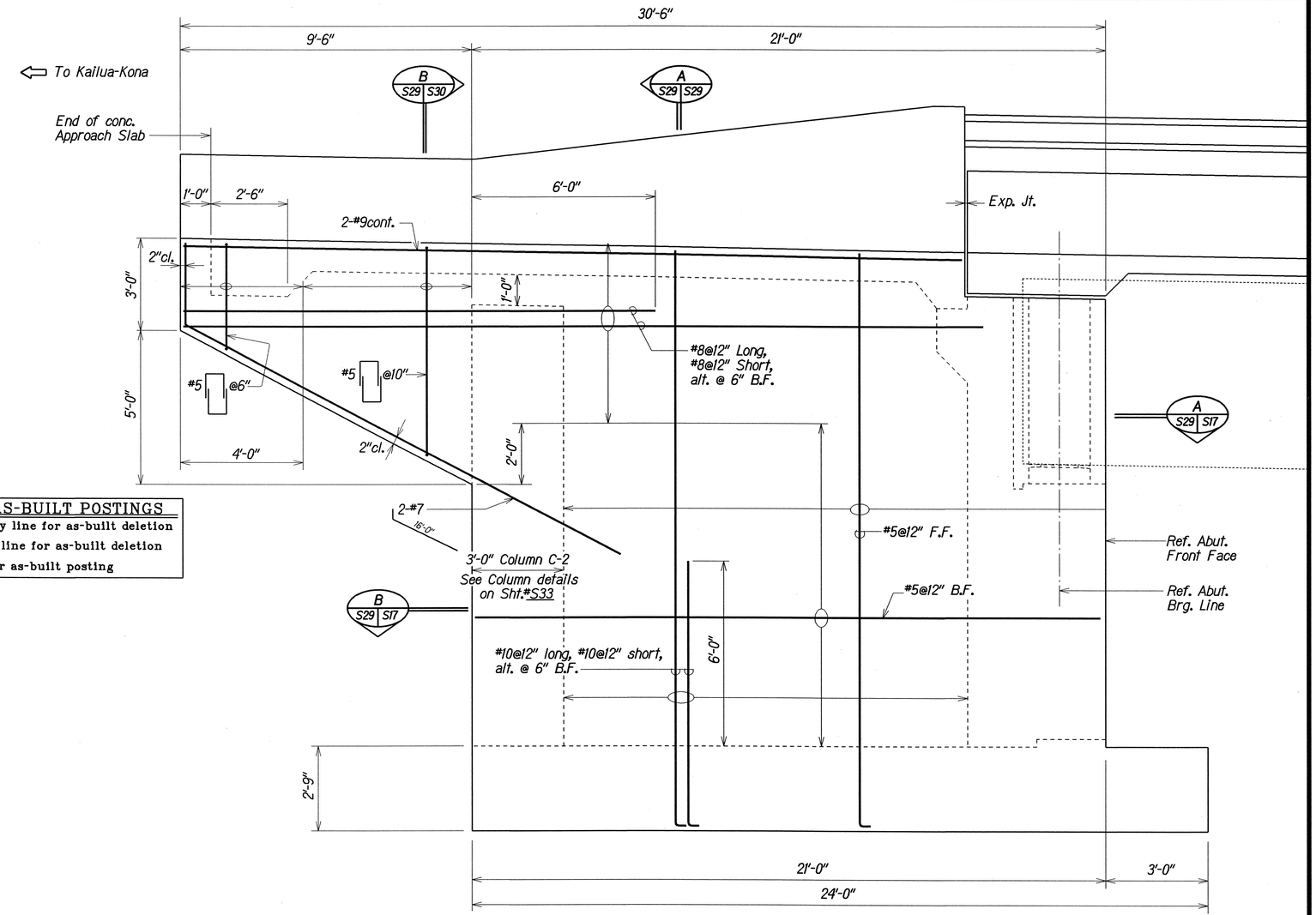

WINGWALL NO. 2--ELEVATION
Scale: 1/2" = 1'-0"

WINGWALL NO. 2 DETAILS--POPOO STREAM BRIDGE

WINGWALL NO. 1 SIMILAR BUT OPPOSITE HAND

ORIGINAL PLAN	SURVEY PLOTTED BY KSG	DATE JUN 1998
	DRAWN BY	
	TRACED BY MW	JUN 1998
NOTE BOOK	DESIGNED BY MW	JUN 1998
	QUANTITIES BY MW	JUN 1998
N00000-S29.dgn	CHECKED BY DCO	JUN 1998

STATE OF HAWAII
DEPARTMENT OF TRANSPORTATION
HIGHWAYS DIVISION

POPOO AND AUWAIAKEAKUA STREAM BRIDGES
WINGWALL NOS. 1 AND 2 DETAILS--
POPOO STREAM BRIDGE

HAWAII BELT ROAD
Replacement of Auwaiakeakua Bridge and Popoo Bridge
Fed. Aid Proj. No. BR-0190(13)

Scale: As Noted Date: Jul. 1998

SHEET No. S29 OF 41 SHEETS

"AS-BUILT"

FED. ROAD DIST. NO.	STATE	FED. AID PROJ. NO.	FISCAL YEAR	SHEET NO.	TOTAL SHEETS
HAWAII	HAW.	BR-0190(13)	1999	37	75

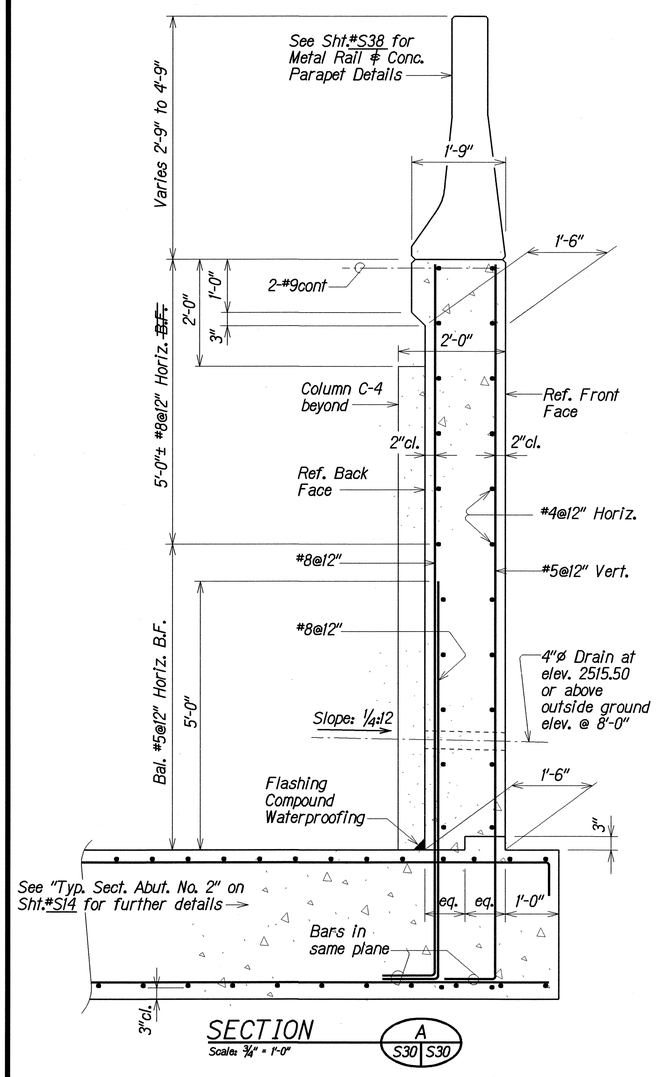

SECTION A (S30 | S30)
Scale: 3/4" = 1'-0"

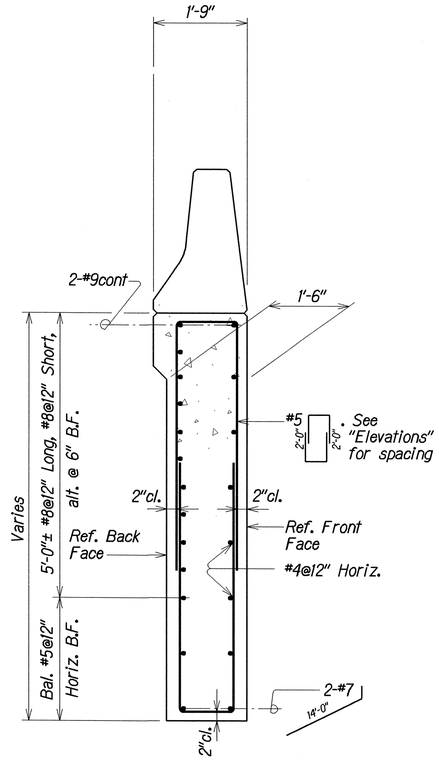

SECTION B (S30 | S30)
Scale: 3/4" = 1'-0"
S29

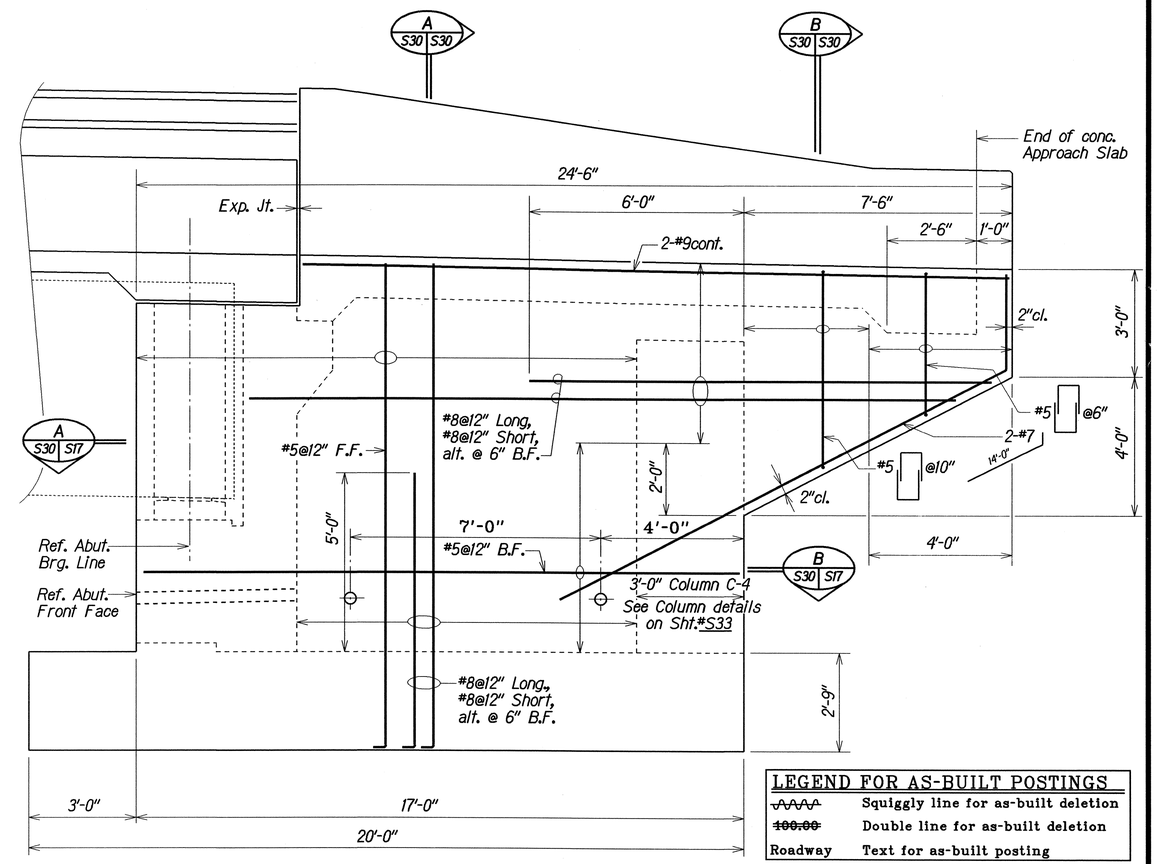

WINGWALL NO. 4--ELEVATION
Scale: 1/2" = 1'-0"

LEGEND FOR AS-BUILT POSTINGS	
~~	Squiggly line for as-built deletion
~~100.00~~	Double line for as-built deletion
Roadway	Text for as-built posting

WINGWALL NO. 4 DETAILS--POPOO STREAM BRIDGE

WINGWALL NO. 3 SIMILAR BUT OPPOSITE HAND

ORIGINAL PLAN	SURVEY PLOTTED BY	KSG	DATE
	DRAWN BY	. . . .	
NOTE BOOK	TRACED BY	JWW	JUN 1998
	DESIGNED BY	JWW	JUN 1998
	QUANTITIES BY	JWW	JUN 1998
40000_S30.dgn	CHECKED BY	DOO	JUN 1998

STATE OF HAWAII
DEPARTMENT OF TRANSPORTATION
HIGHWAYS DIVISION

POPOO AND AUWAIAKEAKUA STREAM BRIDGES
WINGWALL NOS. 3 AND 4 DETAILS--
POPOO STREAM BRIDGE
HAWAII BELT ROAD
Replacement of Auwaiakeakua Bridge and Popoo Bridge
Fed. Aid Proj. No. BR-0190(13)

Scale: As Noted Date: Jul. 1998

SHEET No. S30 OF 41 SHEETS

"AS-BUILT"

FED. ROAD DIST. NO.	STATE	FED. AID PROJ. NO.	FISCAL YEAR	SHEET NO.	TOTAL SHEETS
HAWAII	HAW.	BR-0190(13)	1999	38	75

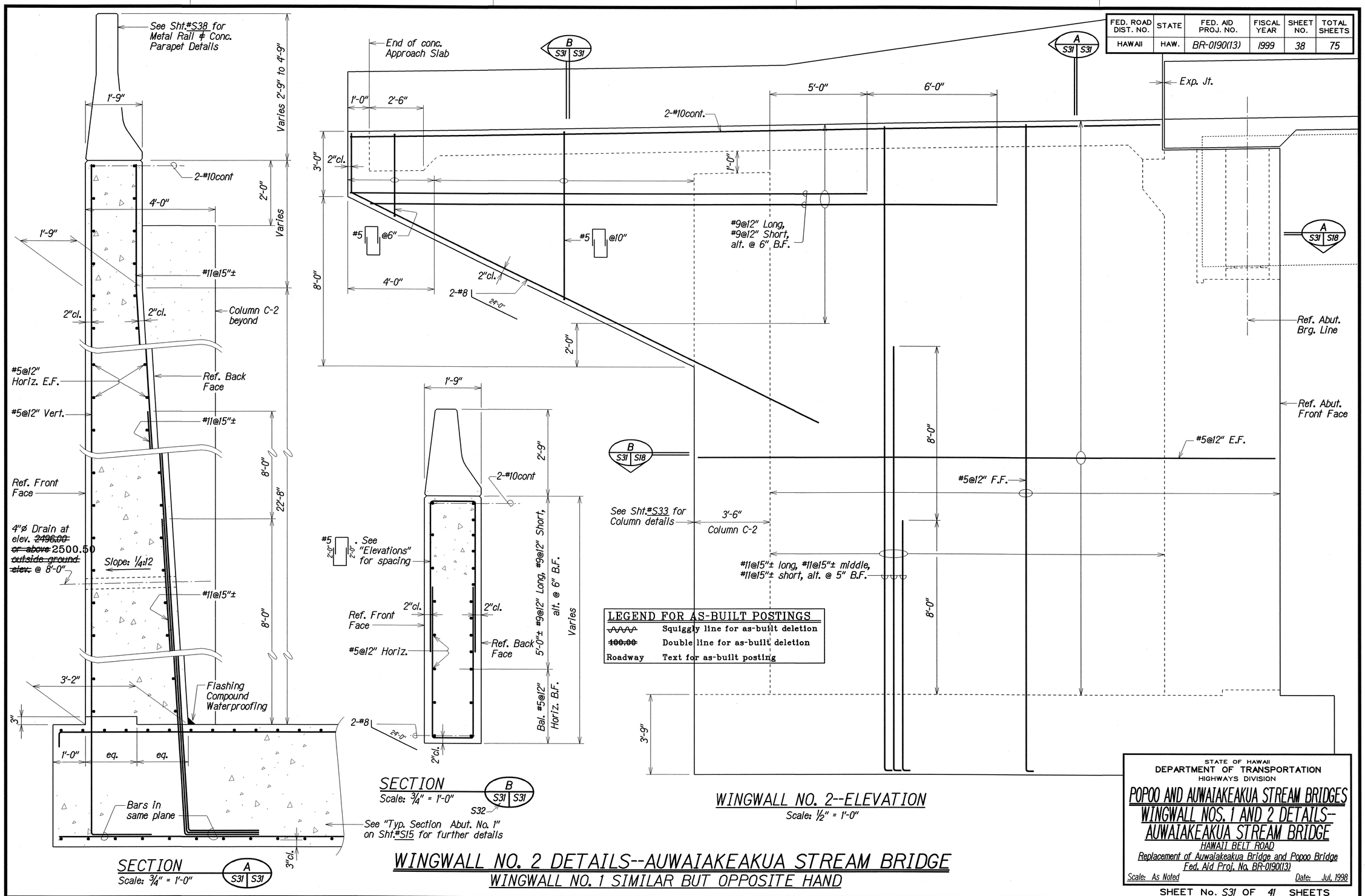

WINGWALL NO. 2 DETAILS--AUWAIAKEAKUA STREAM BRIDGE

WINGWALL NO. 1 SIMILAR BUT OPPOSITE HAND

ORIGINAL PLAN	SURVEY PLOTTED BY KSG	DATE JUN 1998
NOTE BOOK	DRAWN BY	
	TRACED BY WW	JUN 1998
	DESIGNED BY WW	JUN 1998
	QUANTITIES BY WW	JUN 1998
	CHECKED BY DCO	JUN 1998

A00000_S31.dgn

STATE OF HAWAII
DEPARTMENT OF TRANSPORTATION
HIGHWAYS DIVISION

POPOO AND AUWAIAKEAKUA STREAM BRIDGES
WINGWALL NOS. 1 AND 2 DETAILS--
AUWAIAKEAKUA STREAM BRIDGE

HAWAII BELT ROAD
Replacement of Auwaiakeakua Bridge and Popoo Bridge
Fed. Aid Proj. No. BR-0190(13)

Scale: As Noted Date: Jul. 1998

SHEET No. S31 OF 41 SHEETS

"AS-BUILT"

FED. ROAD DIST. NO.	STATE	FED. AID PROJ. NO.	FISCAL YEAR	SHEET NO.	TOTAL SHEETS
HAWAII	HAW.	BR-0190(13)	1999	39	75

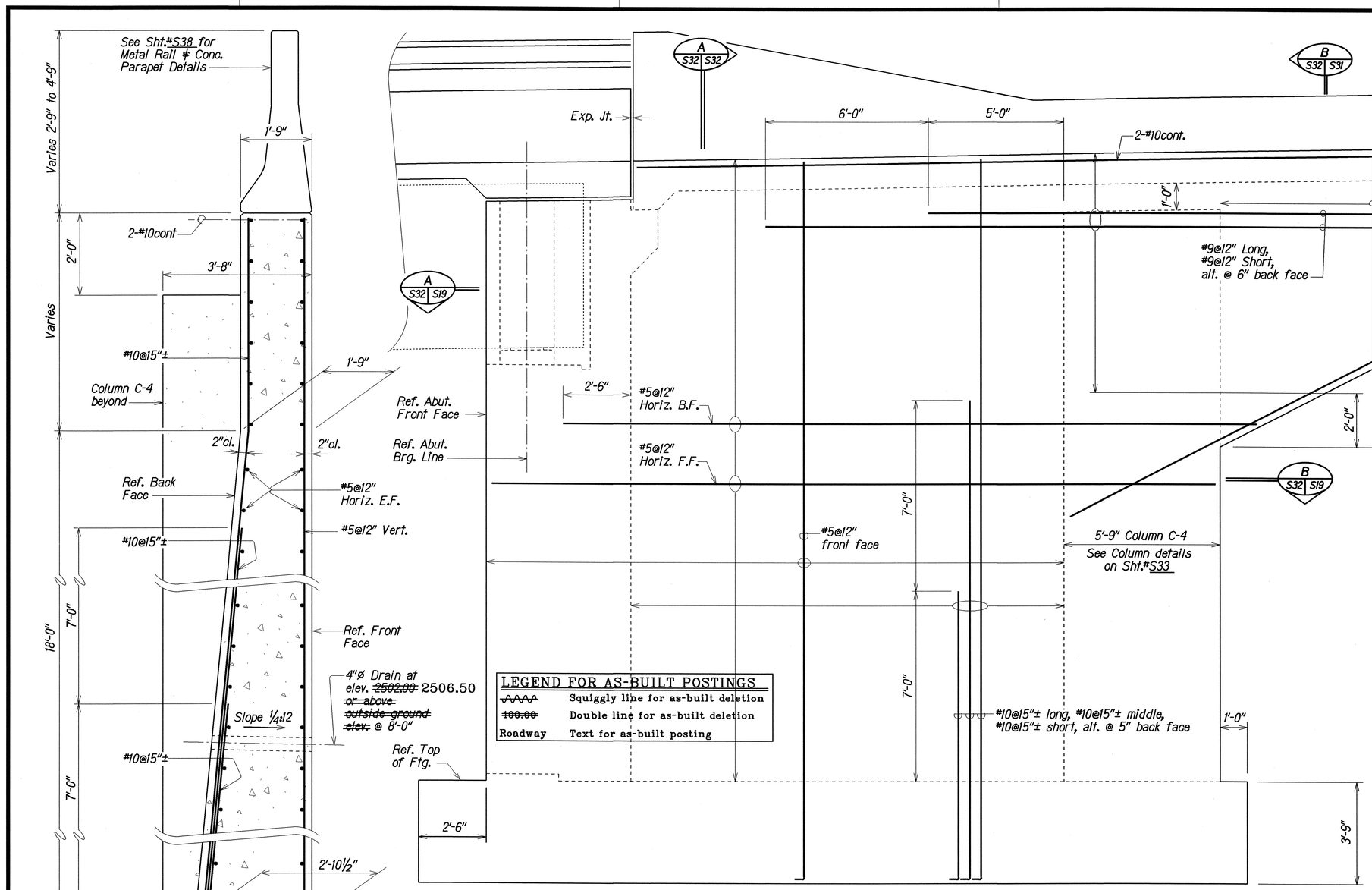

LEGEND FOR AS-BUILT POSTINGS	
~~^^^^^~~	Squiggly line for as-built deletion
~~100.00~~	Double line for as-built deletion
Roadway	Text for as-built posting

WINGWALL NO. 4--ELEVATION
Scale: ½" = 1'-0"

WINGWALL NO. 4 DETAILS--AUWAIAKEAKUA STREAM BRIDGE

WINGWALL NO. 3 SIMILAR BUT OPPOSITE HAND

ORIGINAL PLAN			DATE
	SURVEY PLOTTED BY	KSG	JUN 1998
	DRAWN BY		
	TRACED BY	JWW	JUN 1998
	DESIGNED BY	JWW	JUN 1998
NOTE BOOK	QUANTITIES BY	DCO	JUN 1998
80000 S32	CHECKED BY		

STATE OF HAWAII
DEPARTMENT OF TRANSPORTATION
HIGHWAYS DIVISION

POPOO AND AUWAIAKEAKUA STREAM BRIDGES
WINGWALL NOS. 3 AND 4 DETAILS--
AUWAIAKEAKUA STREAM BRIDGE
HAWAII BELT ROAD
Replacement of Auwaiakeakua Bridge and Popoo Bridge
Fed. Aid Proj. No. BR-0190(13)

Scale: As Noted Date: Jul, 1998

SHEET No. S32 OF 41 SHEETS

"AS-BUILT"

FED. ROAD DIST. NO.	STATE	FED. AID PROJ. NO.	FISCAL YEAR	SHEET NO.	TOTAL SHEETS
HAWAII	HAW.	BR-0190(13)	1999	40	75

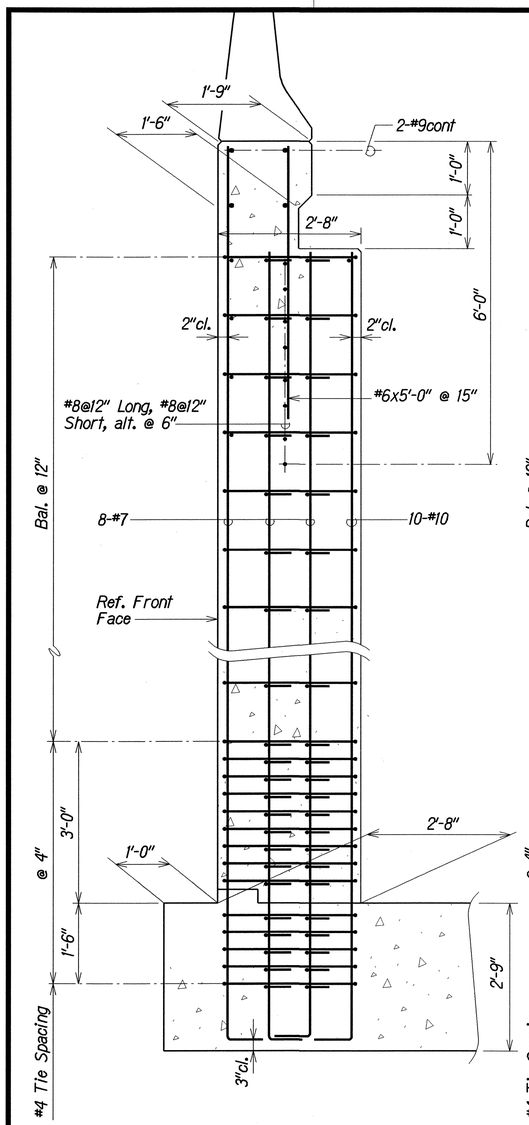

SECTION A S17 S33
Scale: 3/4" = 1'-0"

ABUTMENT NO. 1--COLUMNS C-1 & C-2

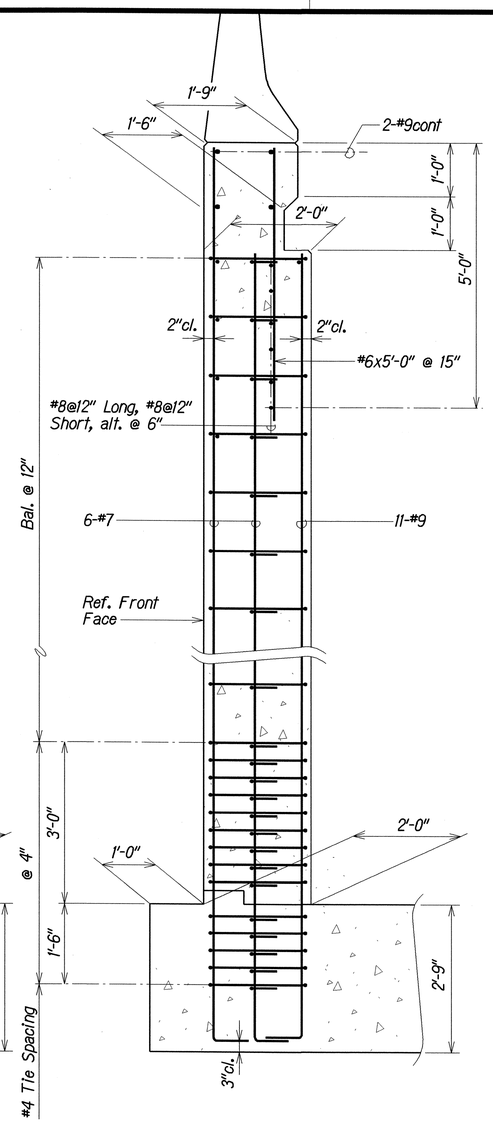

SECTION B S17 S33
Scale: 3/4" = 1'-0"

ABUT NO. 2--COLUMNS C-3 & C-4

POPOO STREAM BRIDGE

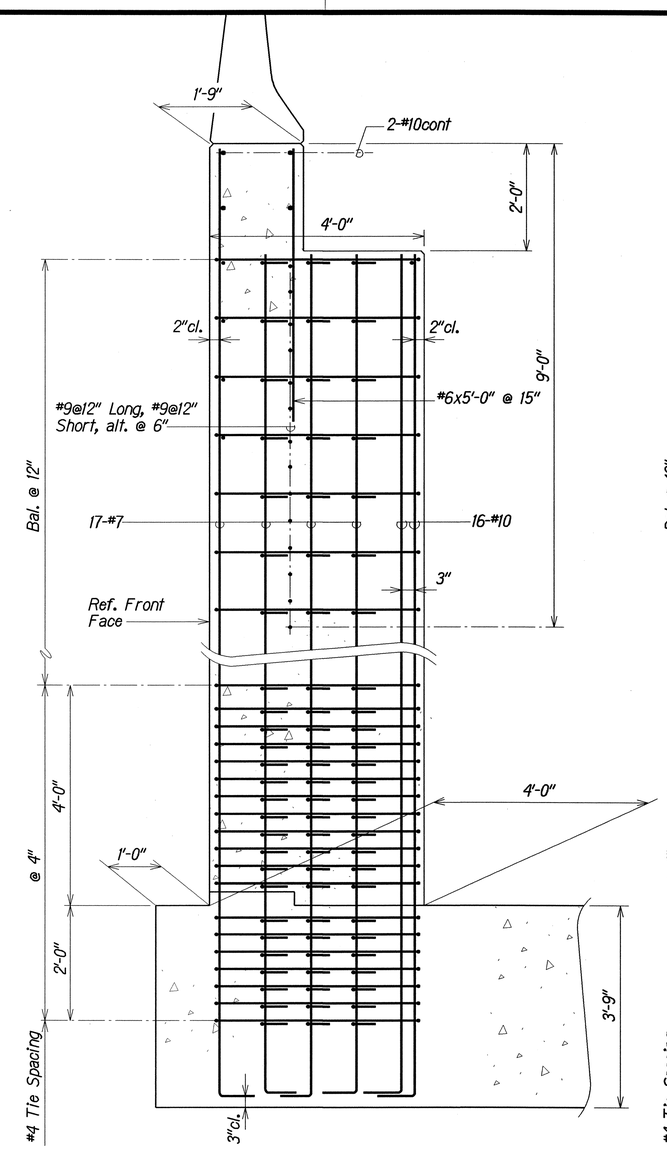

SECTION A S18 S33
Scale: 3/4" = 1'-0"

ABUTMENT NO. 1--COLUMNS C-1 & C-2

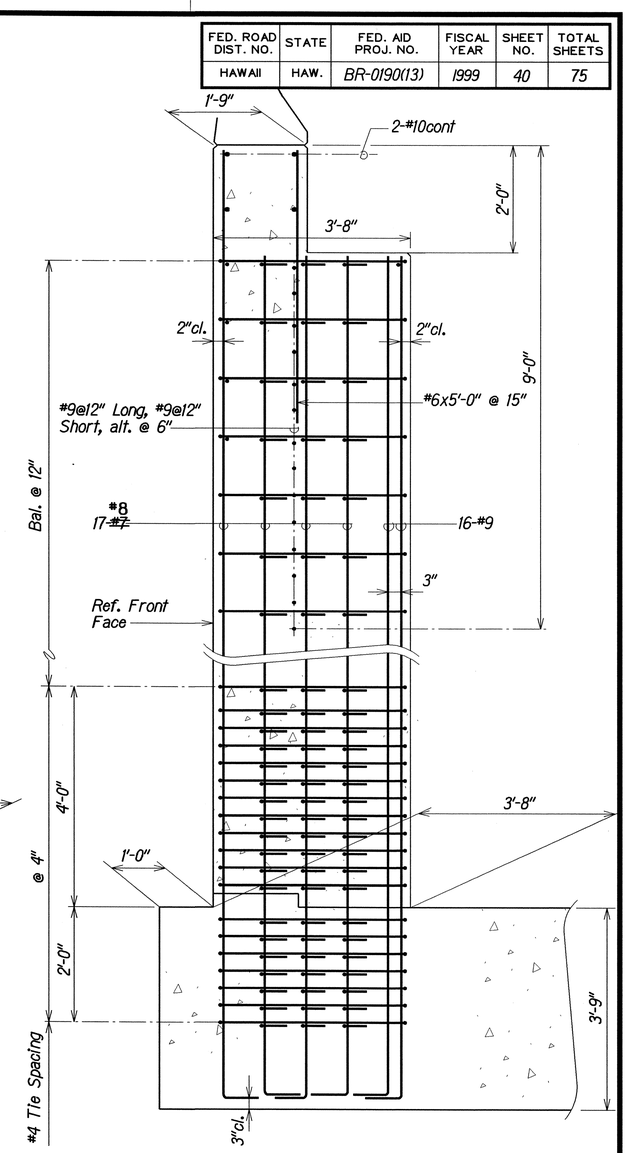

SECTION A S19 S33
Scale: 3/4" = 1'-0"

ABUTMENT NO. 2--COLUMNS C-3 & C-4

AUWAIAKEAKUA STREAM BRIDGE

WINGWALL COLUMN DETAILS

LEGEND FOR AS-BUILT POSTINGS	
~~	Squiggly line for as-built deletion
~~100.00~~	Double line for as-built deletion
Roadway	Text for as-built posting

STATE OF HAWAII
DEPARTMENT OF TRANSPORTATION
HIGHWAYS DIVISION

POPOO AND AUWAIAKEAKUA STREAM BRIDGES
WINGWALL COLUMN DETAILS
HAWAII BELT ROAD
Replacement of Auwaiakeakua Bridge and Popoo Bridge
Fed. Aid Proj. No. BR-0190(13)

Scale: As Noted — Date: Jul, 1998

SHEET No. S33 OF 41 SHEETS

ORIGINAL PLAN	SURVEY PLOTTED BY KSG	DATE JUN 1998
	DRAWN BY	
	TRACED BY JWW	JUN 1998
NOTE BOOK	DESIGNED BY JWW	JUN 1998
	QUANTITIES BY DCO	JUN 1998
	CHECKED BY	

POPOO S33.dgn

"AS-BUILT"

FED. ROAD DIST. NO.	STATE	FED. AID PROJ. NO.	FISCAL YEAR	SHEET NO.	TOTAL SHEETS
HAWAII	HAW.	BR-0190(13)	1999	41	75

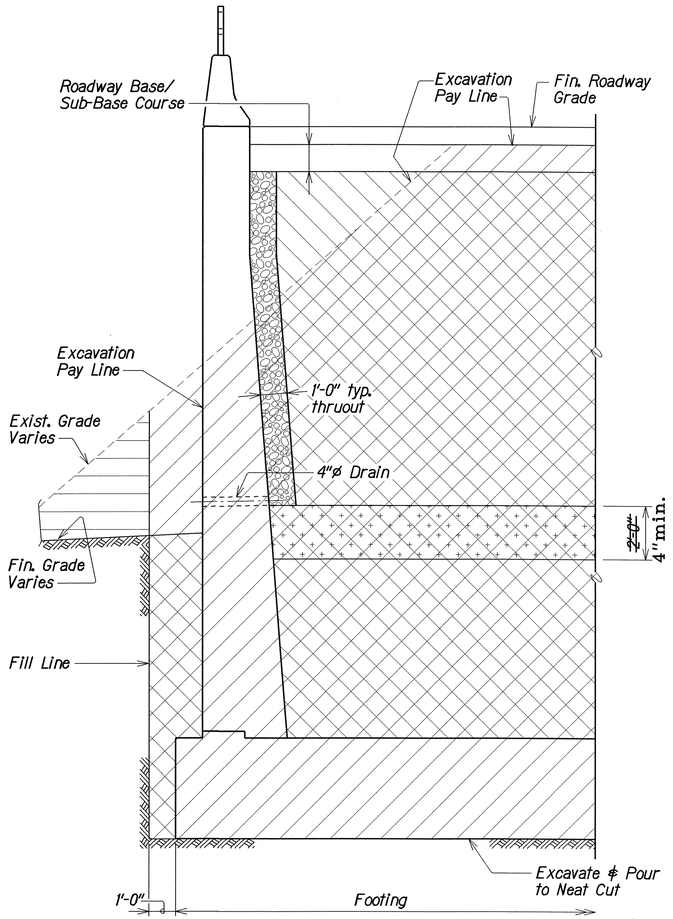

AT WINGWALL

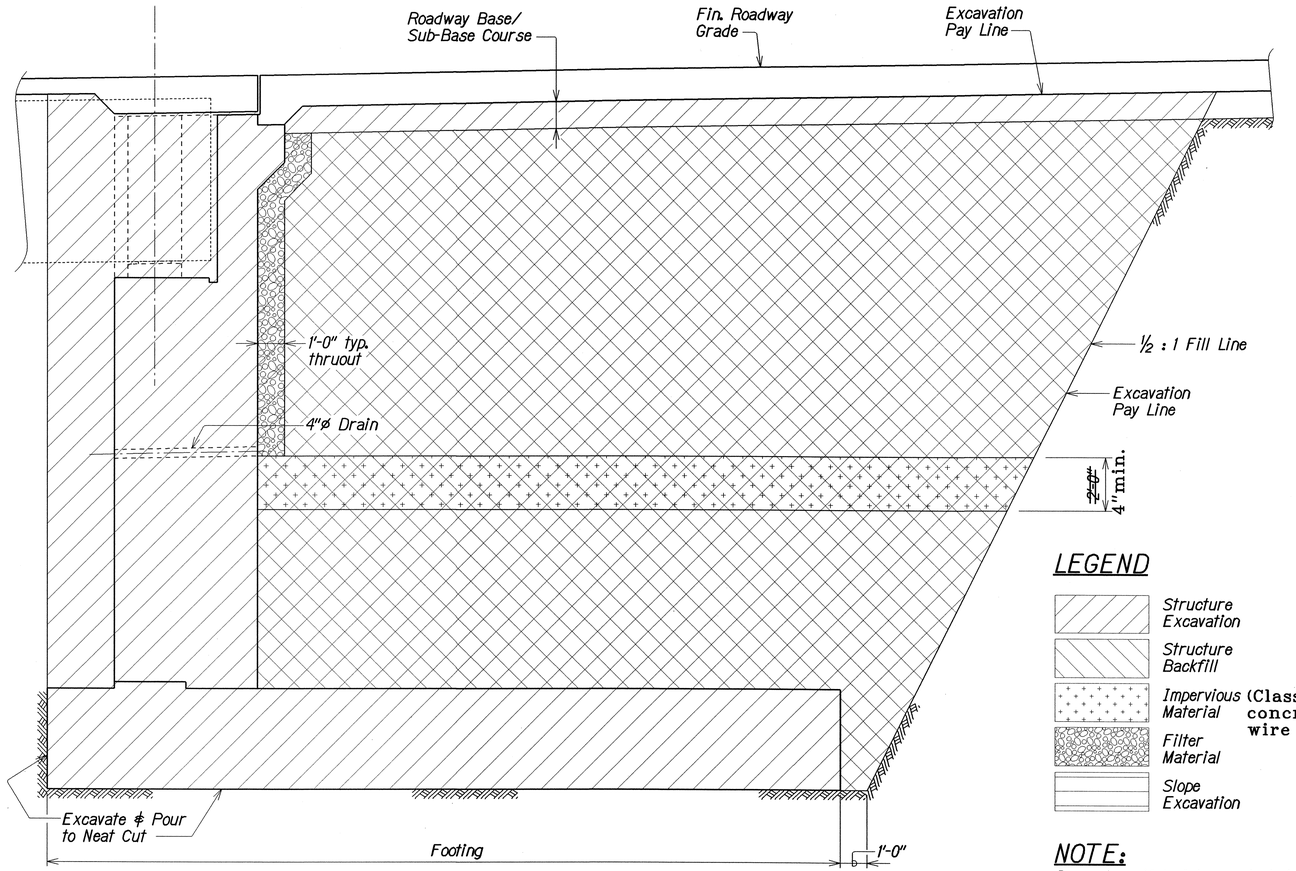

AT ABUTMENT

EXCAVATION AND BACKFILL PAY LIMITS

Not to Scale

LEGEND

- Structure Excavation
- Structure Backfill
- Impervious Material (Class "A" concrete w/ wire fabric)
- Filter Material
- Slope Excavation

NOTE:

Impervious Material as selected by the Engineer shall be made as impervious as possible by pneumatic tamping or other approved methods and shall be incidental to Structure Backfill.

LEGEND FOR AS-BUILT POSTINGS	
∿∿∿∿	Squiggly line for as-built deletion
~~100.00~~	Double line for as-built deletion
Roadway	Text for as-built posting

ORIGINAL PLAN	SURVEY PLOTTED BY KSG	DATE JUN 1998
	DRAWN BY	
NOTE BOOK	TRACED BY MW	JUN 1998
	DESIGNED BY	JUN 1998
	QUANTITIES BY MW	JUN 1998
N:\POPOO_S34.dgn	CHECKED BY DCO	JUN 1998

STATE OF HAWAII
DEPARTMENT OF TRANSPORTATION
HIGHWAYS DIVISION

POPOO AND AUWAIAKEAKUA STREAM BRIDGES
EXCAVATION AND BACKFILL PAY LIMITS
HAWAII BELT ROAD
Replacement of Auwaiakeakua Bridge and Popoo Bridge
Fed. Aid Proj. No. BR-0190(13)

Scale: As Noted Date: Jul, 1998

SHEET No. S34 OF 41 SHEETS

"AS-BUILT"

FED. ROAD DIST. NO.	STATE	FED. AID PROJ. NO.	FISCAL YEAR	SHEET NO.	TOTAL SHEETS
HAWAII	HAW.	BR-0190(13)	1999	42	75

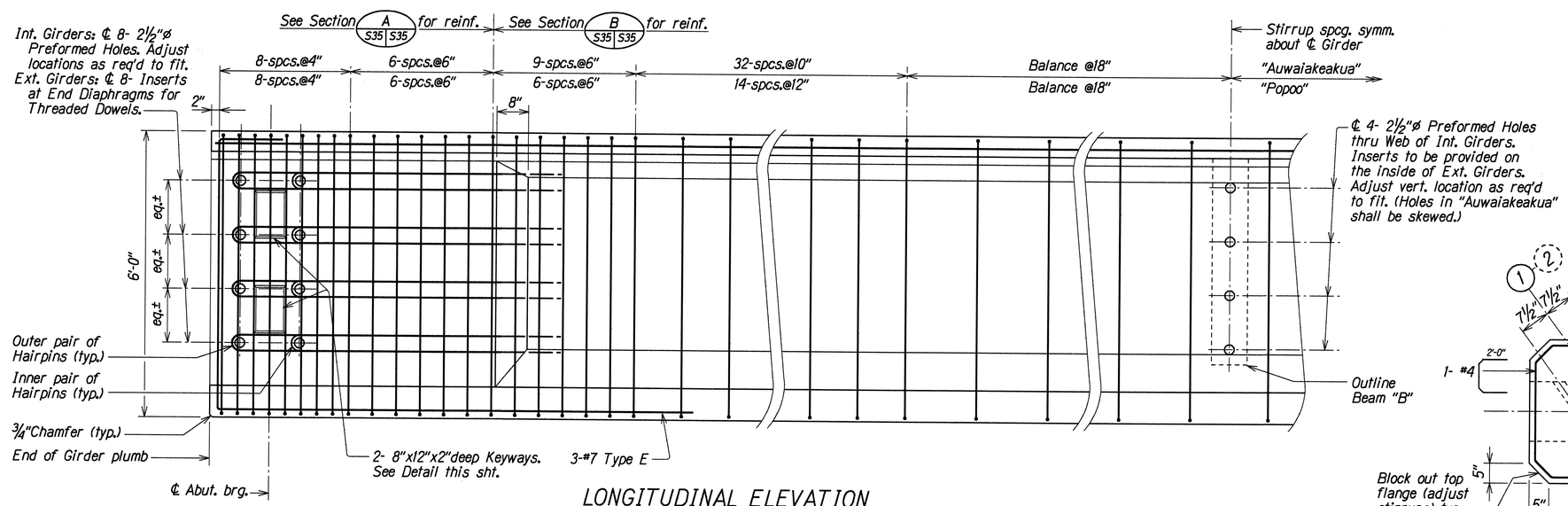

LONGITUDINAL ELEVATION

Scale: ¾" = 1'-0"

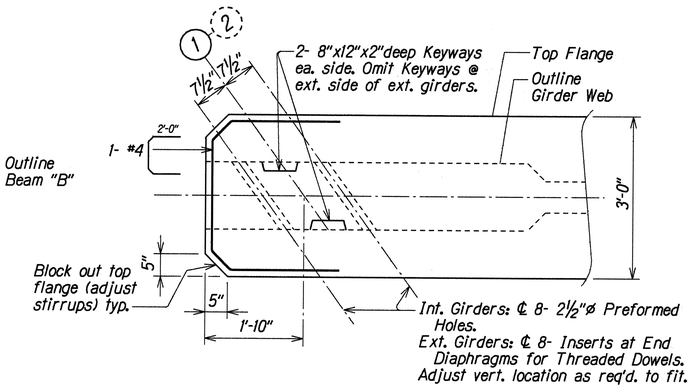

AUWAIAKEAKUA STREAM BRIDGE

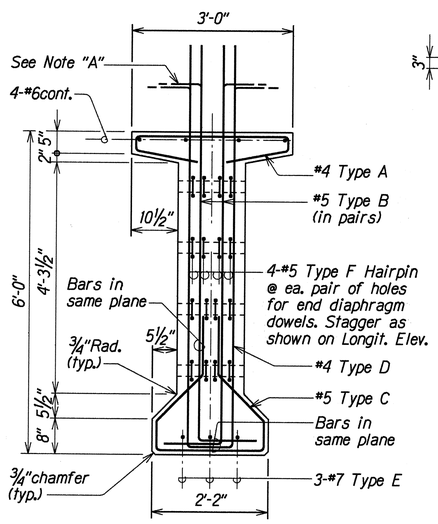

SECTION A S35 S35

Scale: ¾" = 1'-0"

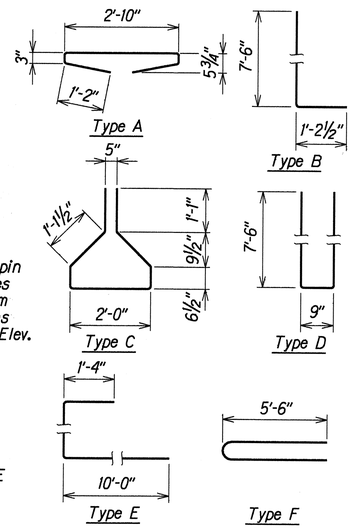

Not to Scale

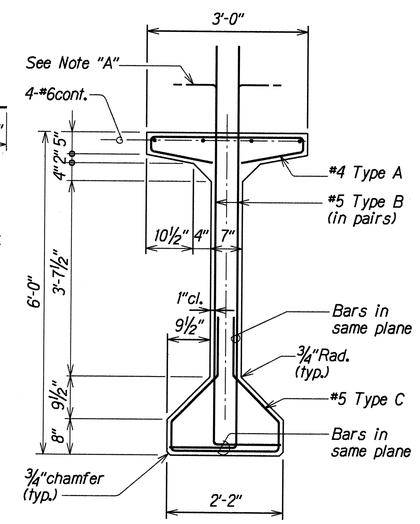

SECTION B S35 S35

Scale: ¾" = 1'-0"

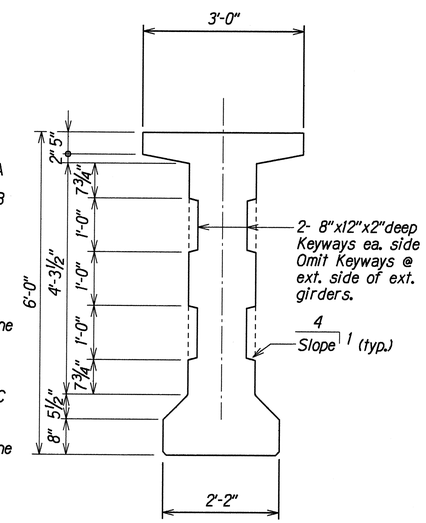

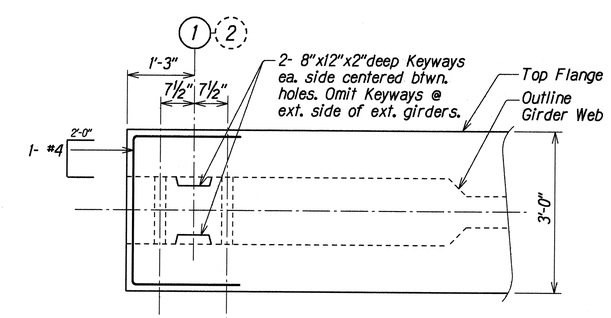

POPOO STREAM BRIDGE

PARTIAL PLAN--END DIAPHRAGM

NOTES:

A. Bend bars in field 2" below top of deck.
B. All reinforcing dimensions are out to out.
C. Top Surface: Rough finish to ¼"min. amplitude after initial setting. Scores to be transverse to beam. Clean free of laitance before deck pour.

PRESTRESSED CONCRETE GIRDER DETAILS--KEEHI TYPE VI

ORIGINAL PLAN	SURVEY PLOTTED BY KSG	DATE JUN 1998
	DRAWN BY	
	TRACED BY JWW	JUN 1998
NOTE BOOK	DESIGNED BY JWW	JUN 1998
	QUANTITIES BY JWW	JUN 1998
40000_S35.dgn	CHECKED BY DCO	JUN 1998

STATE OF HAWAII
DEPARTMENT OF TRANSPORTATION
HIGHWAYS DIVISION

POPOO AND AUWAIAKEAKUA STREAM BRIDGES
PRESTRESSED CONCRETE GIRDER DETAILS
KEEHI TYPE VI

HAWAII BELT ROAD
Replacement of Auwaiakeakua Bridge and Popoo Bridge
Fed. Aid Proj. No. BR-0190(13)

Scale: As Noted — Date: Jul. 1998

SHEET No. S35 OF 41 SHEETS

FED. ROAD DIST. NO.	STATE	FED. AID PROJ. NO.	FISCAL YEAR	SHEET NO.	TOTAL SHEETS
HAWAII	HAW.	BR-0190(13)	1999	43	75

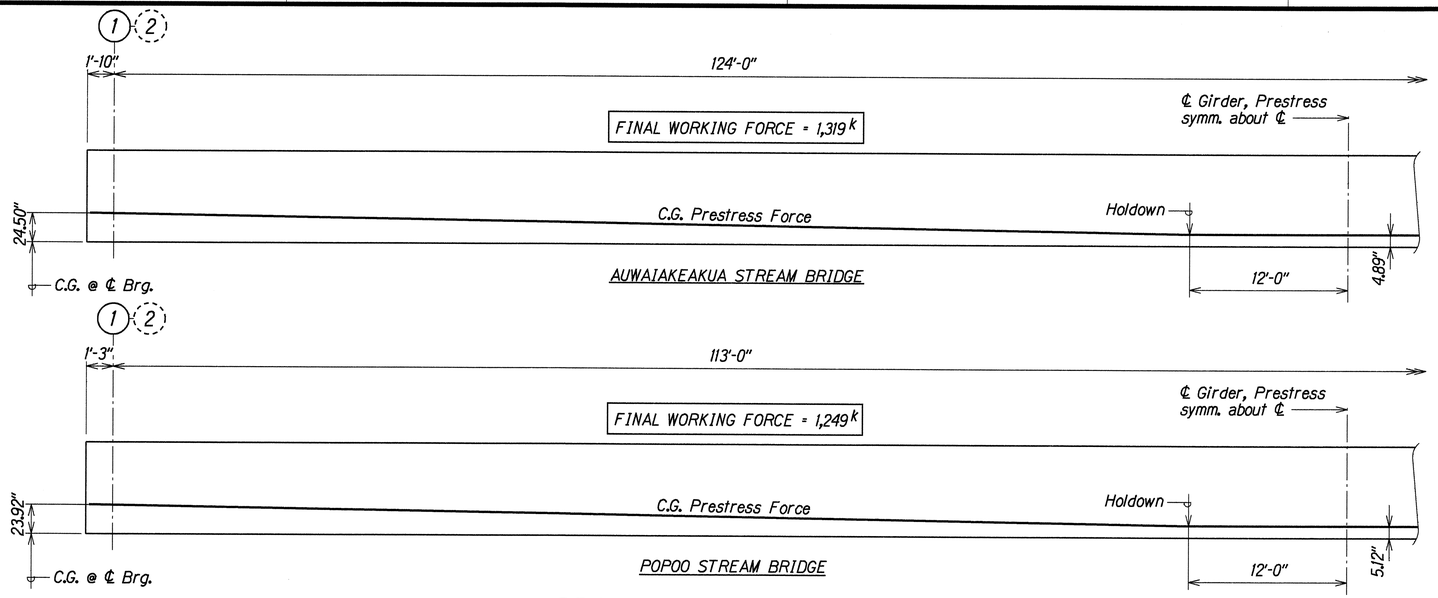

PRESTRESS FORCE DIAGRAM

Not to Scale

BUNDLING OF PRESTRESSED REINFORCEMENT

ARRANGEMENT AND CLEARANCE FOR PRETENSIONED STRANDS

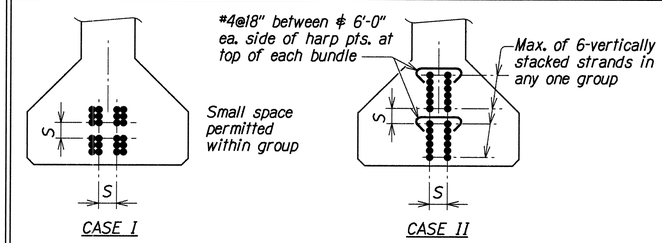

1. Strands may be bundled in groups as shown.
2. The minimum distance "S" between groups or individual strands = 2" for ½"ø strands.
3. "S" is measured between centers of adjacent strands.

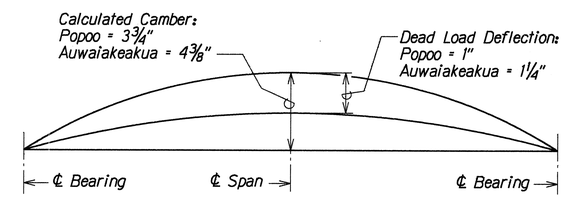

CAMBER DIAGRAM

Not to Scale

CAMBER AND DEFLECTION NOTES:

1. The calculated camber includes the effect of the initial prestressed force and the weight of the girder, after removal from the bed. Positive values shown for calculated camber indicate a net upward deflection. The calculated camber value has been multiplied by a factor of two (2) to approximate the effect of camber growth and concrete creep. The actual camber shall not exceed the calculated camber by more than one-half (½) inch.
2. The dead load deflection includes the combined effects of the weight of slab and diaphragms.
3. All cambers and deflections are shown in inches.

PRESTRESSED GIRDER NOTES:

1. Concrete shall have a minimum 28-day compressive strength of 6,000 p.s.i.
2. Prestressed strands shall be 7-wire ½"ø low relaxation steel strands (area = 0.153 in.^{2}) with an ultimate strength of 270 ksi. For properties see State Standard Specifications.
3. Non-prestressed reinforcing steel shall be Grade 60 unless noted otherwise. For properties see State Standard Specifications.
4. Strand pattern shall be symmetrical about the longitudinal ℄ of the girder.
5. Strand release sequence shall not induce any lateral deflection of the girder.
6. The Contractor shall submit his proposed strand pattern and releasing sequence to the Engineer for approval.
7. During curing, care shall be taken to avoid any lateral deflection of the girder due to improper orientation.
8. Lifting devices shall be placed as close as possible to the center line of bearings of the girder. Details and locations of lifting devices shall be submitted to the Engineer for approval. Such approval does not relieve the Contractor of his responsibilities if the girder is damaged due to failure of the lifting device.
9. See Framing Plan for locations of diaphragms and girder mark numbers. Lengths shown do not include effect of elastic shortening.
10. Allowable Concrete Stresses:
    A. Minimum ultimate concrete strength before release, f'ci = 5,100 p.s.i.
    B. Tensile stress after losses (at Service Load) = 0 p.s.i.

ORIGINAL PLAN		
SURVEY PLOTTED BY	KSC	DATE JUN. 1998
PLANS BY		
TRACED BY		JUN. 1998
NOTE BOOK	DESIGNED BY	JWW JUN. 1998
	QUANTITIES BY	JWW JUN. 1998
40000_S36.dgn	CHECKED BY	JWW JUN. 1998

STATE OF HAWAII
DEPARTMENT OF TRANSPORTATION
HIGHWAYS DIVISION

POPOO AND AUWAIAKEAKUA STREAM BRIDGES
PRESTRESSED CONCRETE GIRDER DETAILS
KEEHI TYPE VI

HAWAII BELT ROAD
Replacement of Auwaiakeakua Bridge and Popoo Bridge
Fed. Aid Proj. No. BR-0190(13)

Scale: As Noted — Date: Jul. 1998

SHEET No. S36 OF 41 SHEETS

FED. ROAD DIST. NO.	STATE	FED. AID PROJ. NO.	FISCAL YEAR	SHEET NO.	TOTAL SHEETS
HAWAII	HAW.	BR-0190(13)	1999	44	75

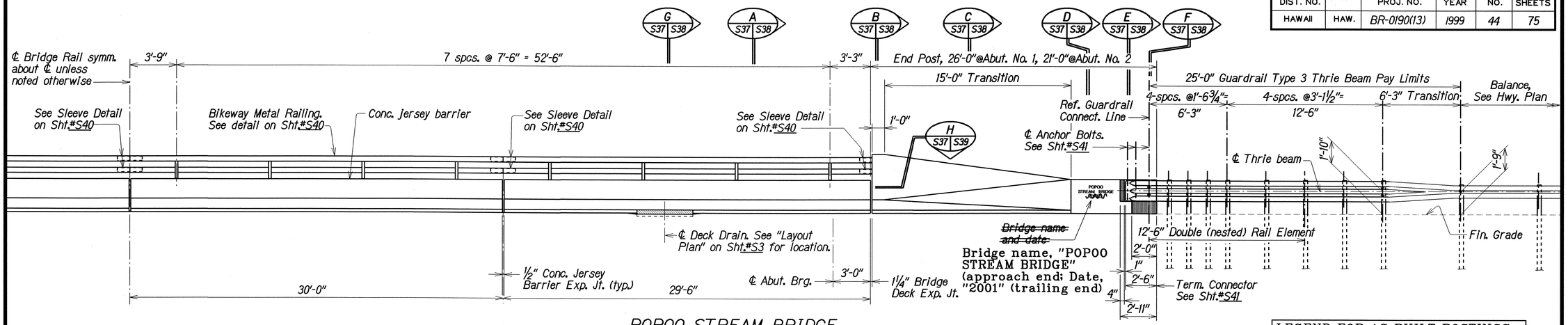

POPOO STREAM BRIDGE

LEGEND FOR AS-BUILT POSTINGS	
~~	Squiggly line for as-built deletion
~~100.00~~	Double line for as-built deletion
Roadway	Text for as-built posting

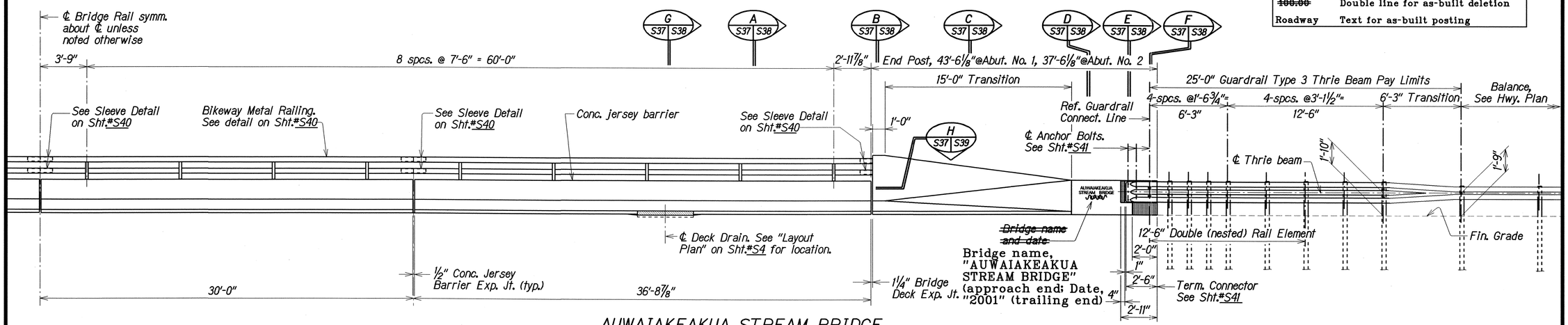

AUWAIAKEAKUA STREAM BRIDGE

CONCRETE JERSEY BARRIER ELEVATION

Scale: ¼" = 1'-0"

ORIGINAL PLAN	SURVEY PLOTTED BY KSG DATE JUN 1998
	DRAWN BY • •
	TRACED BY • •
NOTE BOOK	DESIGNED BY JWW JUN 1998
	QUANTITIES BY JWW JUN 1998
40000 S37.dgn	CHECKED BY JCO JUN 1998

STATE OF HAWAII
DEPARTMENT OF TRANSPORTATION
HIGHWAYS DIVISION

POPOO AND AUWAIAKEAKUA STREAM BRIDGES
CONCRETE PARAPET, METAL RAILING, END POST AND TYPE 3 THRIE BEAM ELEVATIONS

HAWAII BELT ROAD
Replacement of Auwaiakeakua Bridge and Popoo Bridge
Fed. Aid Proj. No. BR-0190(13)

Scale: As Noted Date: Jul, 1998

SHEET No. S37 OF 41 SHEETS

"AS-BUILT"

FED. ROAD DIST. NO.	STATE	FED. AID PROJ. NO.	FISCAL YEAR	SHEET NO.	TOTAL SHEETS
HAWAII	HAW.	BR-0190(13)	1999	ADD45	75

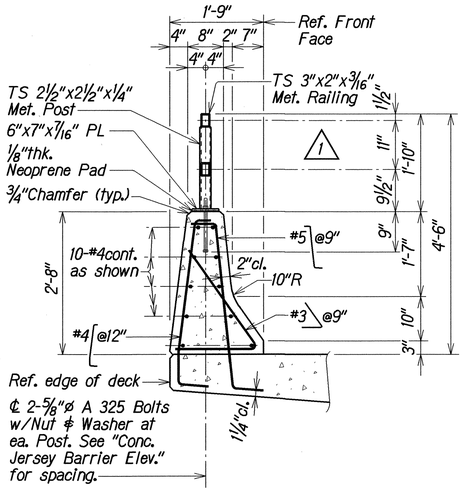

SECTION A S37 S38

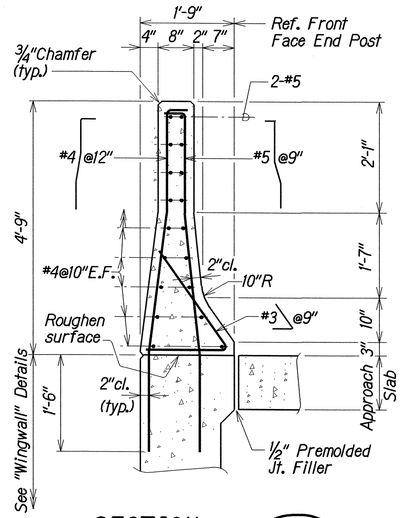

SECTION B S37 S38

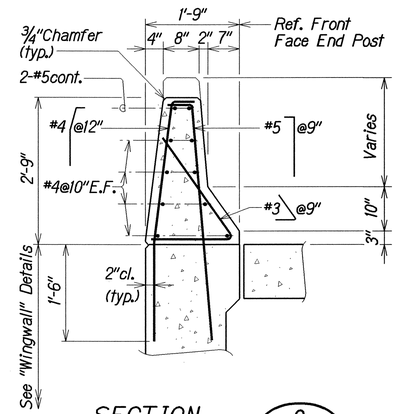

SECTION C S37 S38

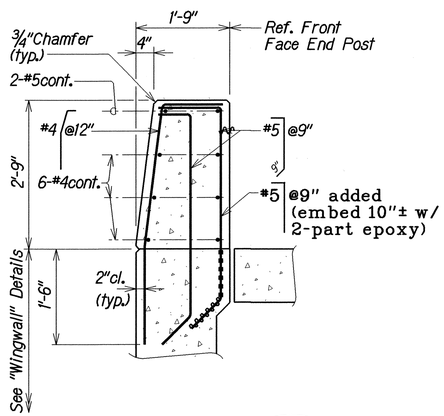

SECTION D S37 S38

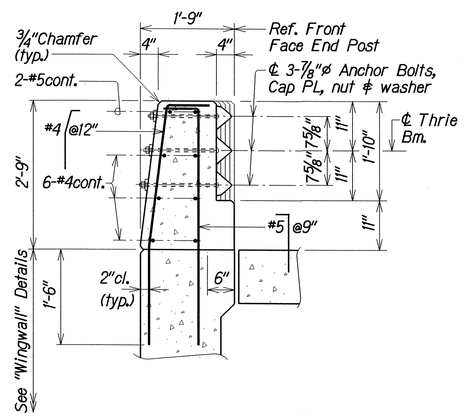

SECTION E S37 S38

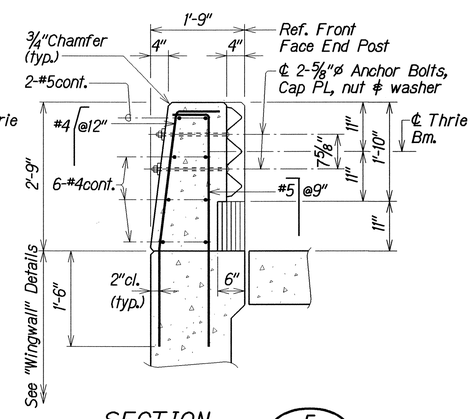

SECTION F S37 S38

LEGEND FOR AS-BUILT POSTINGS	
∿∿∿	Squiggly line for as-built deletion
~~100.00~~	Double line for as-built deletion
Roadway	Text for as-built posting

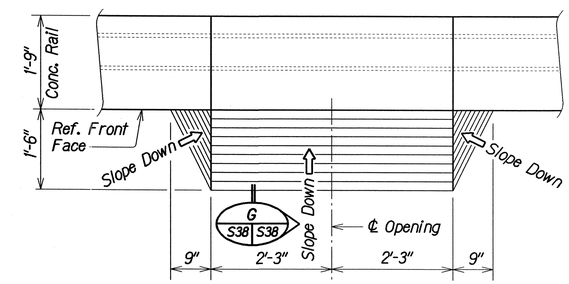

PARTIAL PLAN

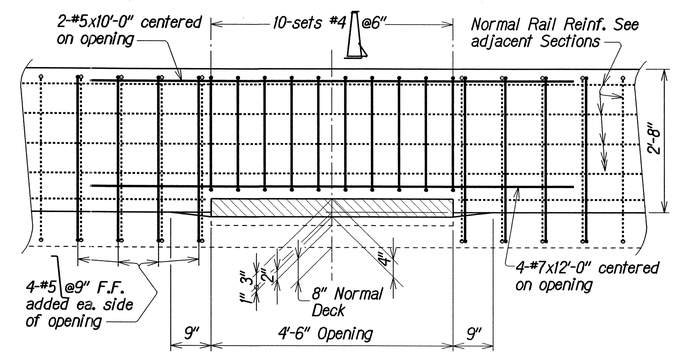

PARTIAL ELEVATION

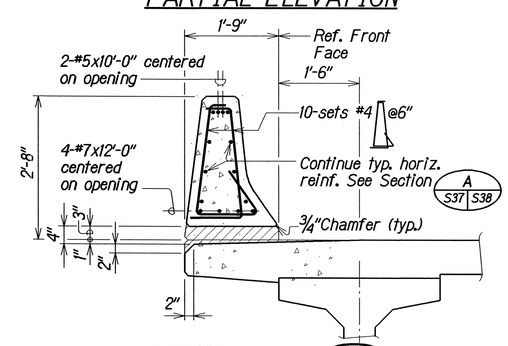

SECTION G S38 S38

DECK DRAIN DETAILS

Scale: ¾" = 1'-0"

DATE	DESCRIPTION
6-3-99	1 "Bikeway Metal Railing" SECTION A S37 S38 TS 5 x2"x3/16" Met. Railing changed to TS 3 x2"x3/16" Met. Railing; railing dimensions modified

STATE OF HAWAII
DEPARTMENT OF TRANSPORTATION
HIGHWAYS DIVISION

POPOO AND AUWAIAKEAKUA STREAM BRIDGES
CONCRETE PARAPET, END POST AND DECK DRAIN DETAILS
HAWAII BELT ROAD
Replacement of Auwaiakeakua Bridge and Popoo Bridge
Fed Aid Proj. No. BR-0190(13)

Scale: As Noted — Date: Jul, 1998

ORIGINAL PLAN	SURVEY PLOTTED BY KSG	DATE JUN 1998
	DRAWN BY	
	TRACED BY	
NOTE BOOK	DESIGNED BY JNW	JUN 1998
	QUANTITIES BY JNW	JUN 1998
40000_S38.dgn	CHECKED BY DCO	JUN 1998

SHEET No. S38 OF 41 SHEETS

"AS-BUILT"

ADD 45

FED. ROAD DIST. NO.	STATE	FED. AID PROJ. NO.	FISCAL YEAR	SHEET NO.	TOTAL SHEETS
HAWAII	HAW.	BR-0190(13)	1999	46	75

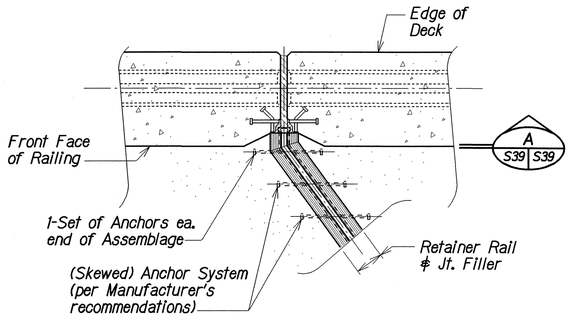

PARTIAL PLAN AT SKEW
AUWAIAKEAKUA STREAM BRIDGE
Not to Scale

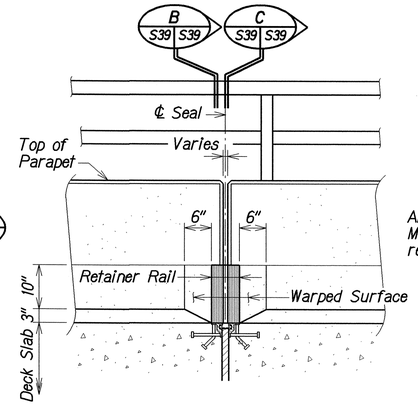

PARTIAL ELEVATION A S39 S39
Not to Scale

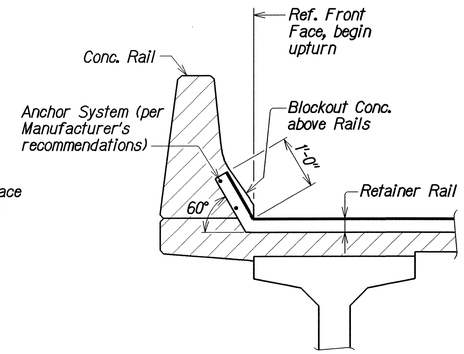

SECTION B S39 S39
Scale: 3/4" = 1'-0"

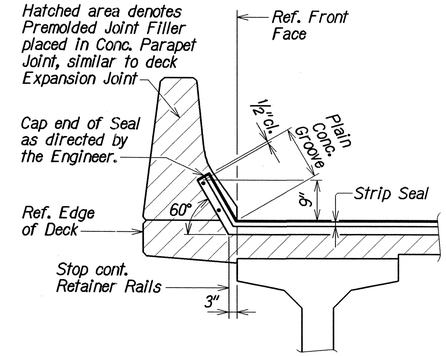

SECTION C S39 S39
Scale: 3/4" = 1'-0"

EXPANSION JOINT DETAILS

LEGEND FOR AS-BUILT POSTINGS	
~~	Squiggly line for as-built deletion
~~100.00~~	Double line for as-built deletion
Roadway	Text for as-built posting

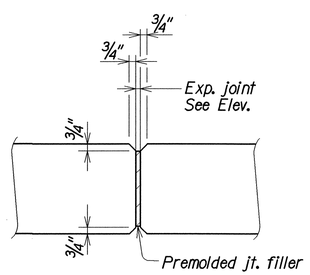

SECTION H S37 S39
BRIDGE DECK EXPANSION JOINT
Scale: 1½" = 1'-0"

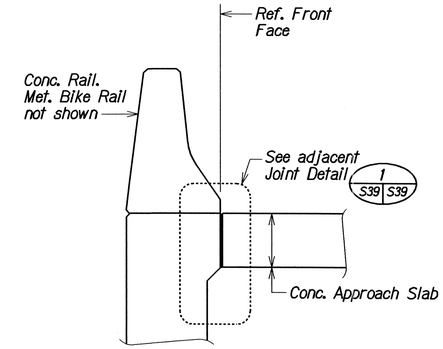

PARTIAL SECTION

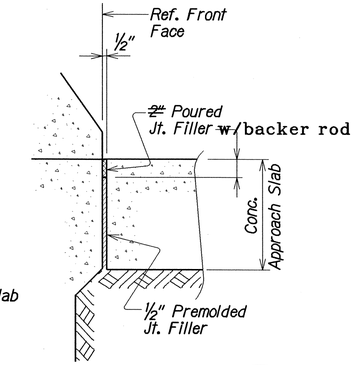

DETAIL 1 S39 S39
Scale: 1½" = 1'-0"

JOINT DETAILS AT WALL AND CONCRETE RAIL

TYPICAL JOINT DETAILS

ORIGINAL PLAN	SURVEY PLOTTED BY KSG	DATE JUN. 1998
	DRAWN BY	
	TRACED BY JWW	JUN. 1998
NOTE BOOK	DESIGNED BY JWW	JUN. 1998
	QUANTITIES BY LCO	JUN. 1998
40000_S39.dgn	CHECKED BY	

STATE OF HAWAII
DEPARTMENT OF TRANSPORTATION
HIGHWAYS DIVISION

POPOO AND AUWAIAKEAKUA STREAM BRIDGES
TYPICAL JOINT DETAILS
HAWAII BELT ROAD
Replacement of Auwaiakeakua Bridge and Popoo Bridge
Fed. Aid Proj. No. BR-0190(13)

Scale: As Noted Date: Jul. 1998

SHEET No. S39 OF 41 SHEETS

"AS-BUILT"

FED. ROAD DIST. NO.	STATE	FED. AID PROJ. NO.	FISCAL YEAR	SHEET NO.	TOTAL SHEETS
HAWAII	HAW.	BR-0190(13)	1999	ADD47	75

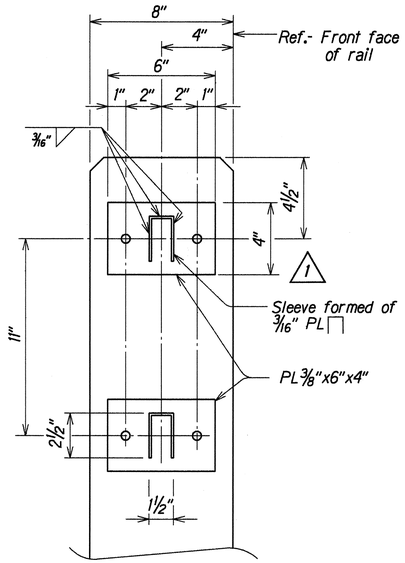

SECTION A S40 S40

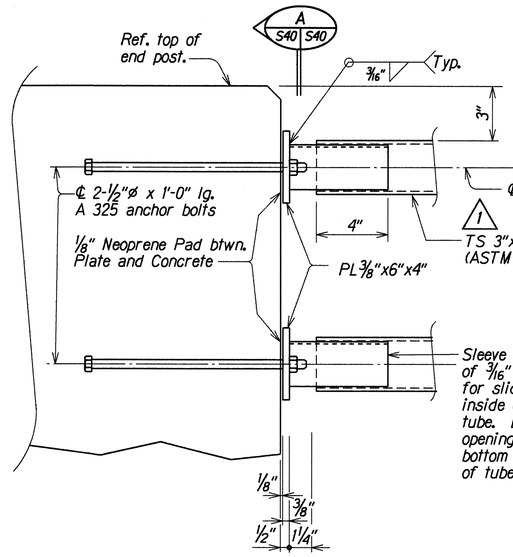

ELEVATION

RAIL SLEEVE ANCHOR AT END POST CONNECTION DETAIL

Scale: 3" = 1'-0"

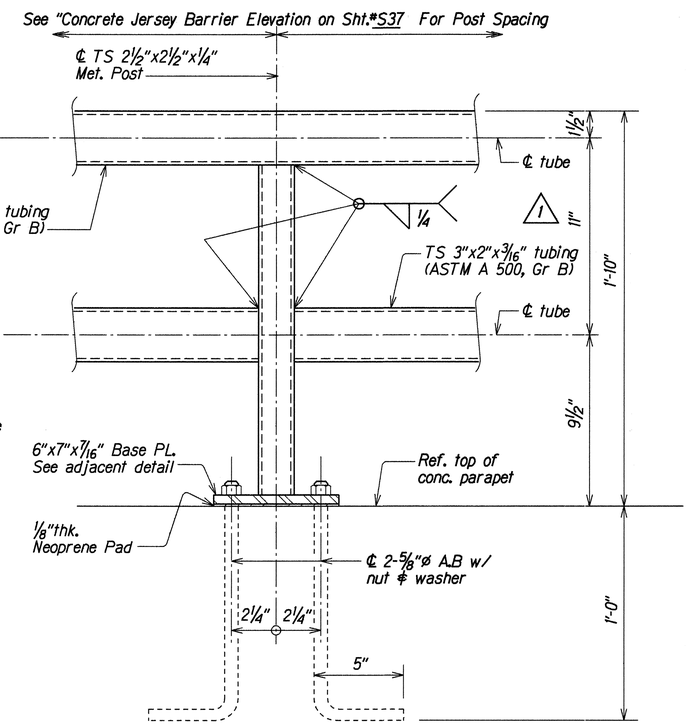

ELEVATION

Scale: 3" = 1'-0"

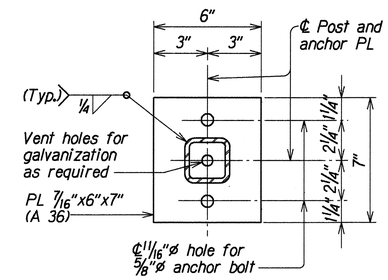

ANCHOR PL DETAIL

Scale: 3" = 1'-0"

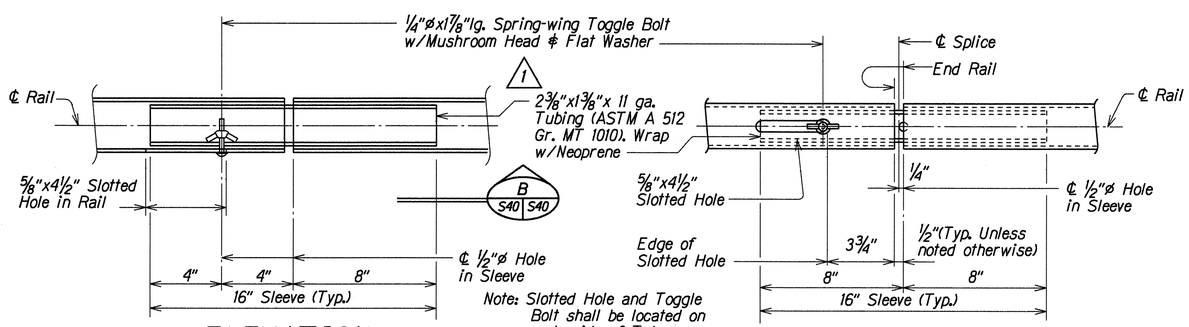

ELEVATION

SECTION B S40 S40

TYPICAL TUBE SPLICE DETAIL

Not to Scale

BIKEWAY METAL RAILING DETAILS

DATE	DESCRIPTION
6-3-99	1 "Bikeway Metal Railing" TS 5 x2"x3/16" Met. Railing changed to TS 3 x2"x3/16" Met. Railing; railing dimensions modified

STATE OF HAWAII
DEPARTMENT OF TRANSPORTATION
HIGHWAYS DIVISION

POPOO AND AUWAIAKEAKUA STREAM BRIDGES

BIKEWAY METAL RAILING DETAILS AND BIKEWAY METAL RAILING CONNECTION TO END POST

HAWAII BELT ROAD

Replacement of Auwaiakeakua Bridge and Popoo Bridge

Fed. Aid Project No. BR-0190(13)

Scale: As Noted Date: Jul. 1998

SHEET No. S40 OF 41 SHEETS

ORIGINAL PLAN	SURVEY PLOTTED BY KSG DATE JUN 1998
	DRAWN BY • • • •
NOTE BOOK	TRACED BY MW JUN 1998
	DESIGNED BY MW JUN 1998
	QUANTITIES BY MW JUN 1998
	CHECKED BY CCO JUN 1998

40000_S40.dgn

ADD 47

FED. ROAD DIST. NO.	STATE	FED. AID PROJ. NO.	FISCAL YEAR	SHEET NO.	TOTAL SHEETS
HAWAII	HAW.	BR-0190(13)	1999	48	75

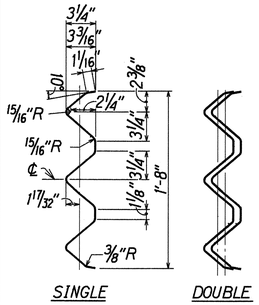

SECTION THRU RAIL ELEMENT
Scale: 1½" = 1'-0"

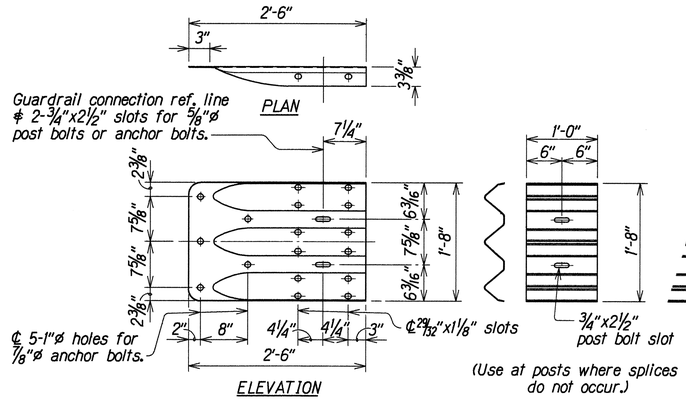

TERMINAL CONNECTOR
Scale: 1" = 1'-0"

BACKUP PLATE
Scale: 1" = 1'-0"

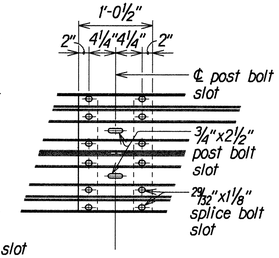

RAIL SPLICE
Scale: 1" = 1'-0"

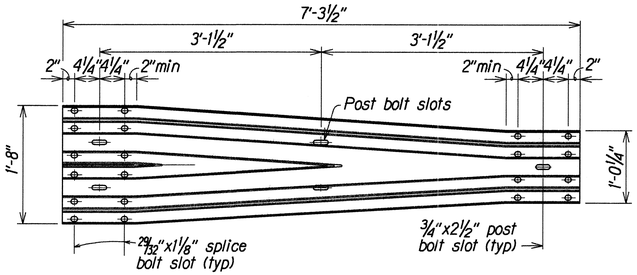

TRANSITION SECTION
Scale: 1" = 1'-0"

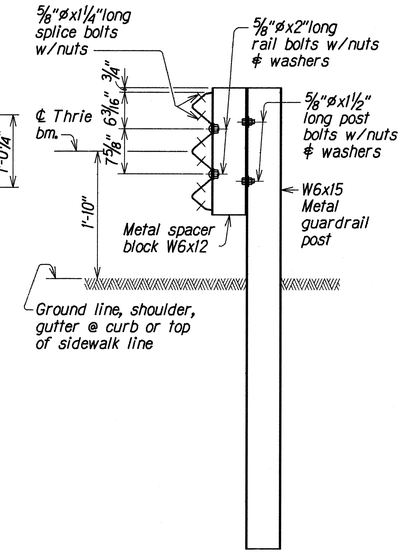

TYPICAL SECTION
METAL GUARDRAIL ON METAL POST
WITH METAL SPACER BLOCK
Scale: 1" = 1'-0"

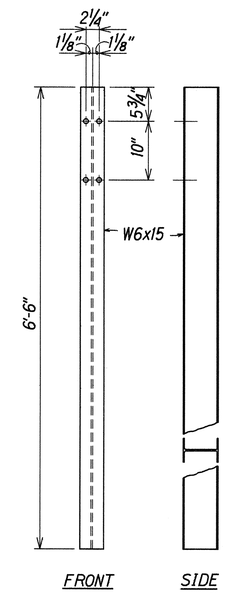

POST DETAILS
Scale: 1" = 1'-0"

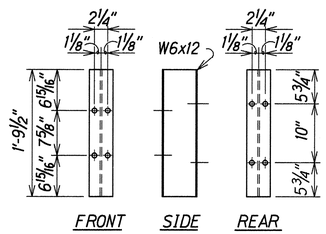

SPACER BLOCK DETAILS
Scale: 1" = 1'-0"

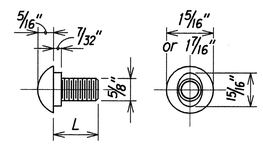

L	Thread Length
1¼"	Full thread
2"	1½"min. thread length

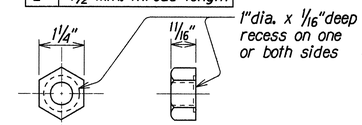

⅝"ø BUTTON HEAD BOLT
& RECESS NUT
Scale: 6" = 1'-0"

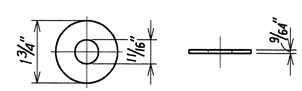

STEEL WASHER FOR ⅝"ø BOLT
Scale: 6" = 1'-0"

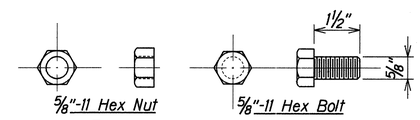

⅝"ø HEX BOLT & NUT
Scale: 6" = 1'-0"

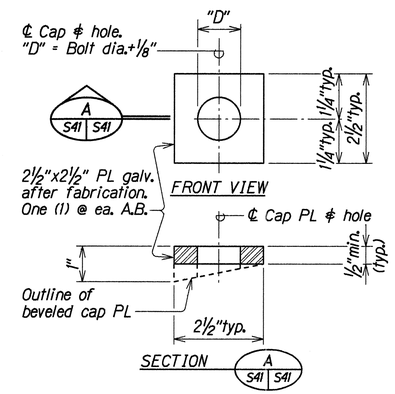

CAP (BEARING) PLATE DETAIL
Scale: 6" = 1'-0"

NOTES:

1. The work necessary to connect guardrail to concrete end post shall include all labor, materials, tools, equipment and incidentals necessary to complete the work and shall be incidental to Item No. 606.3221, Guardrail Type 3 Thrie Beam on Steel Post and will not be paid for separately.
2. See "DOT Standard Plan" Sht.#TE-57 for guardrail Type 3 thrie beam details and Sht.#TE-50 & #TE-51 for W beam metal guardrail details. Lap terminal connector and rail element in direction of traffic to prevent snagging.
3. See "General Notes" on Sht.#S1 for additional guardrail and drilling information.
4. All anchor bolts shall be high strength bolts conforming to the requirements of ASTM 325 Type 1.
5. Anchor bolt length shall be such that a snug fit of the elements and full thread engagement plus ¼" (max) is attained.
6. "Terminal Connector" shall be fabricated from 10gauge steel conforming to the requirements of AASHTO M 180.
7. "Terminal Connector" and standard spacer, including all anchor bolts, cap PL, nuts and washers, shall be hot-dip galvanized after fabrication.
8. Cap PL shall be fabricated from ASTM A 36.
9. First 25'-0" of guardrail adjoining "Terminal Connector" shall be galvanized steel and supports spaced as shown on the detail drawings. This section of rail shall be placed on tangent to end post or parallel to roadway, unless conditions at site renders it impossible to do so. Flare point to be determined in field.
10. Double (nest 1st panel) thrie beam elements at all end post connections, except on highways with one-way traffic pattern, use single thrie beam elements at end post on trailing end only.
11. Where double (nested) beam occur, 12" "Back-up Plate" not required.

ORIGINAL PLAN	SURVEY PLOTTED BY		DATE
	DRAWN BY	KSG	JUN 1998
	TRACED BY		
NOTE BOOK	DESIGNED BY	JNW	JUN 1998
	QUANTITIES BY	JNW	JUN 1998
	CHECKED BY	DKO	JUN 1998

STATE OF HAWAII
DEPARTMENT OF TRANSPORTATION
HIGHWAYS DIVISION
POPOO AND AUWAIAKEAKUA STREAM BRIDGES
METAL GUARDRAIL TYPE 3 THRIE BEAM
AND APPURTENANCES DETAILS
HAWAII BELT ROAD
Replacement of Auwaiakeakua Bridge and Popoo Bridge
Fed. Aid Proj. No. BR-0190(13)
Scale: As Noted Date: Jul. 1998
SHEET No. S41 OF 41 SHEETS

METAL GUARDRAIL TYPE 3 THRIE BEAM AND APPURTENANCES DETAILS