FED. ROAD DIST. NO.	STATE	PROJ. NO.	FISCAL YEAR	SHEET NO.	TOTAL SHEETS
HAWAII	HAW.	130B-01-98	1999	81	210

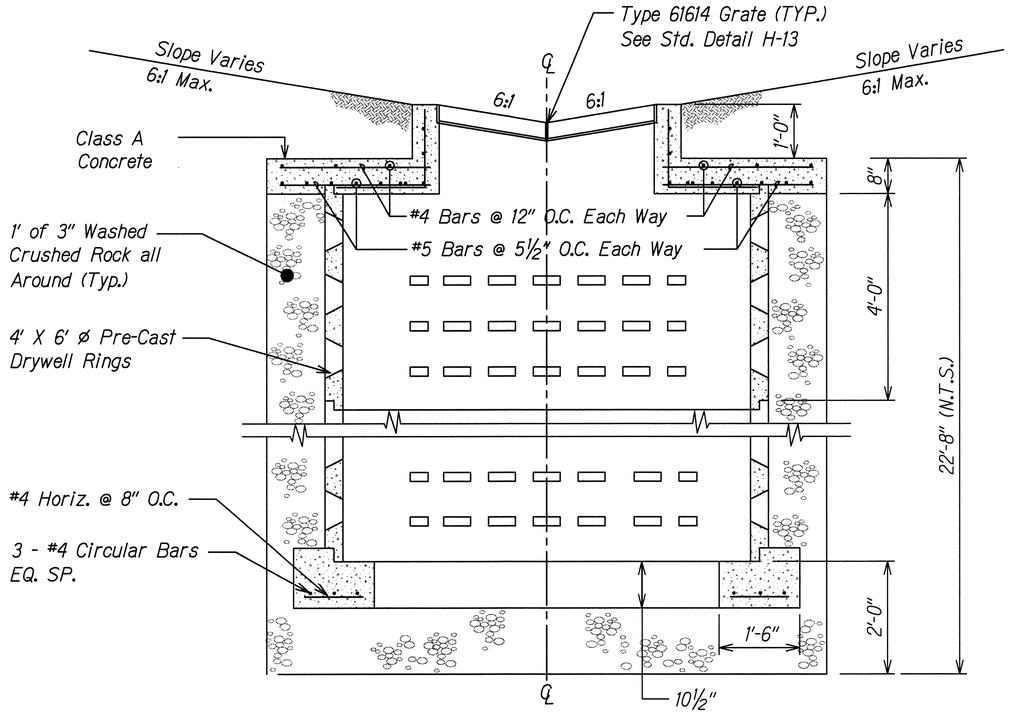

SECTION "A" - "A"

SCALE: ¾" = 1'-0"

FILE: DW-4.DGN

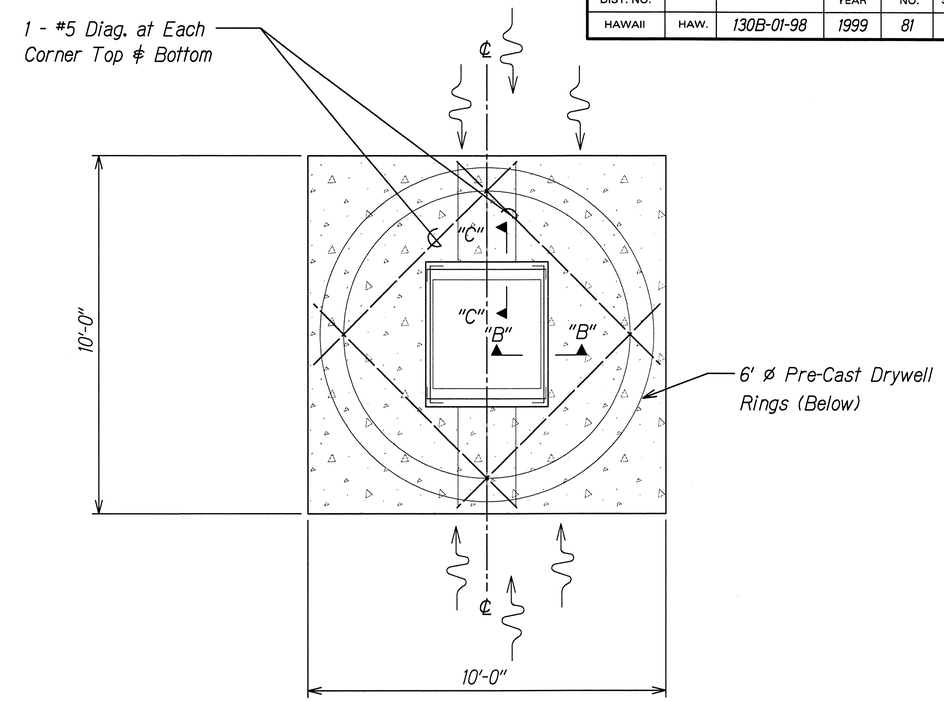

DRYWELL COVER PLAN

SCALE: ½"=1'-0"

FILE: DW-1.DGN

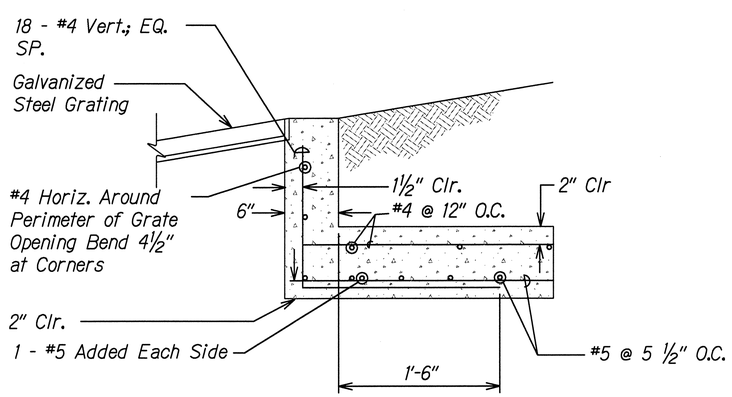

SECTION "B" - "B"

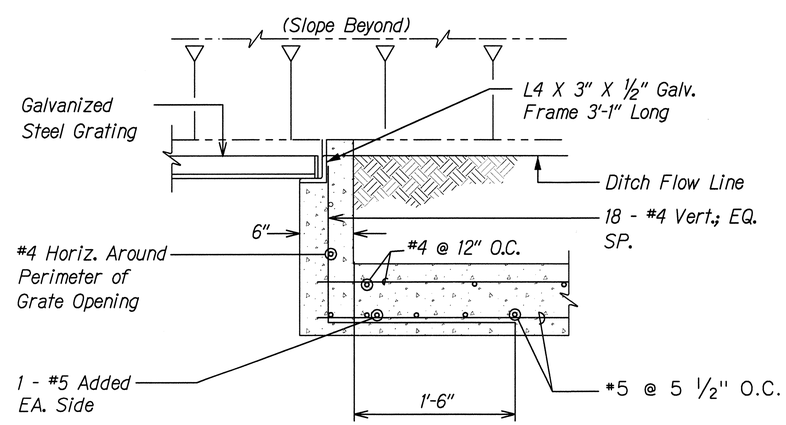

SECTION "C" - "C"

TYPE 61614 DRYWELL & COVER

Scale: 1½" = 1'-0"

FILE: DW-3.DGN

NANCY E. BURNS
LICENSED PROFESSIONAL ENGINEER
No. 6812-C
HAWAII, U.S.A.

THIS WORK WAS PREPARED BY ME OR UNDER MY SUPERVISION AND CONSTRUCTION OF THIS PROJECT WILL BE UNDER MY OBSERVATION.

Nancy E Burns

DATE: 8/24/98

STATE OF HAWAII
DEPARTMENT OF TRANSPORTATION
HIGHWAYS DIVISION

TYPE 61614
DRYWELL DETAILS

KEA'AU-PAHOA ROAD VIC. OF KEA'AU TOWN (KEA'AU BYPASS ROAD), PH. 2

PROJECT NO. 130B-01-98

Scale: As Noted — Date: August, 1998

SHEET No. 1 OF 1 SHEETS

ORIGINAL PLAN	SURVEY PLOTTED BY	DATE
	DRAWN BY	
	TRACED BY	
NOTE BOOK	DESIGNED BY	
	QUANTITIES BY	
No. DRYWELL.DGN	CHECKED BY	