FED. ROAD DIST. NO.	STATE	FED. AID PROJ. NO.	FISCAL YEAR	SHEET NO.	TOTAL SHEETS
HAWAII	HAW.	NH-019-2(55)	2004	37	112

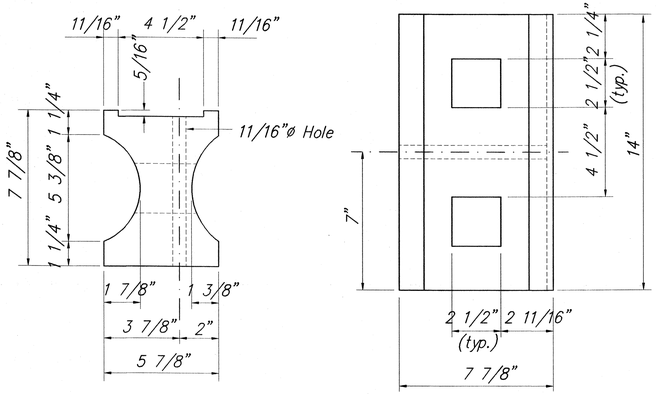

TOP SIDE

RECYCLED PLASTIC BLOCKOUT (TYPE I)

N.T.S.

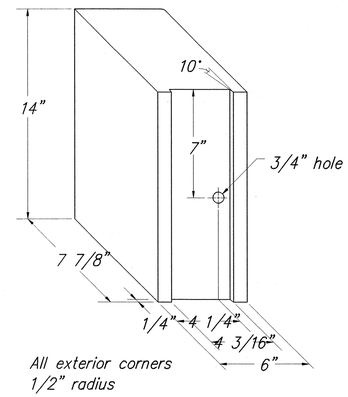

RECYCLED POLYETHYLENE OFFSET BLOCK (TYPE II)

N.T.S.

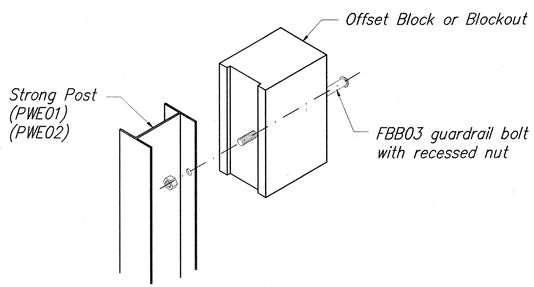

Exploded View
(Rail and washer not shown)

STEEL POST AND BLOCK DETAIL

N.T.S.

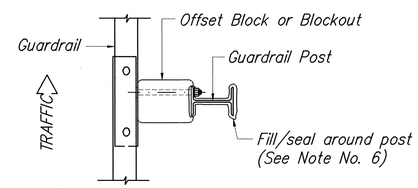

PLAN

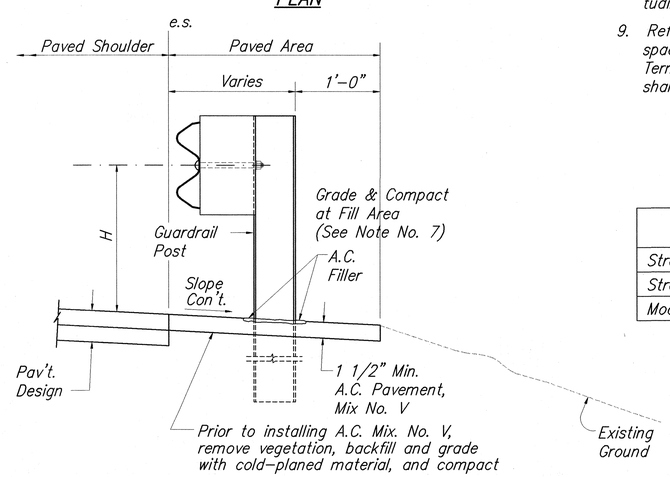

ELEVATION

TYPICAL GUARDRAIL INSTALLATION

N.T.S.

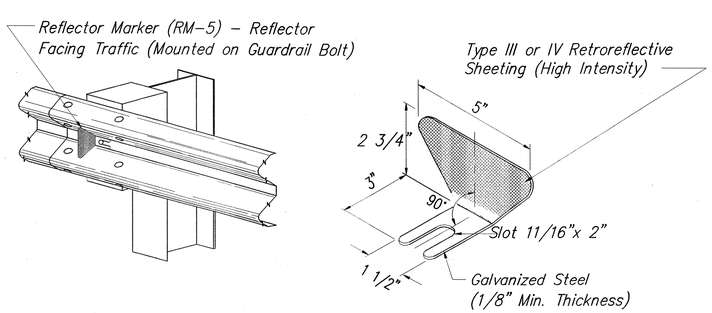

REFLECTOR MARKER (RM-5) DETAIL AND TYPICAL INSTALLATION

N.T.S.

GENERAL NOTES

1. All hardware, posts and fasteners shall be hot-dip zinc coated galvanized after fabrication. No punching, drilling or cutting will be permitted after galvanizing.
2. Where conditions require, special post lengths in increments of 6 inches may be specified.
3. All fasteners, posts, and rail elements (i.e. FBB03, PWE01, RWM02b, etc.) shall conform to the latest edition and amendments of "A Guide to Standardized Highway Barrier Rail Hardware", a report prepared and approved by the AASHTO-AGC-ARTBA Joint Cooperative Committee, Subcommittee On New Highway Materials, Task Force 13 Report. Dimensions of fastners, posts and rail elements have been converted from metric units into their present form.
4. The Recycled Plastic Block or Offset Block shall be approved by the State.
5. All new guardrail systems (system consists of total length of guardrail including both end treatments) shall include the Additional Paved Area.
6. After the guardrail posts are installed in the paved area, the Contractor shall fill/seal around each guardrail post and all cracks in the paved area caused during the guardrail post installation. If required by the inspector/engineer, the Contractor shall tamper the paved area around the guardrail post prior to filling/sealing. All costs associated with this work shall not be paid for separately, but shall be considered incidental to the various guardrail items.
7. When standards for the fill slope area cannot be met, a site specific, engineer approved design may be used.
8. New A.C. pavement at guardrails shall extend 6 feet longitudinally beyond terminal ends.
9. Reflector Markers (RM-5) mounted on guardrails shall be spaced every 25 feet. RM-5's shall not be installed on Terminal Sections. Furnishing and installing of each RM-5 shall be considered incidental to the adjacent guardrail system.

GUARDRAIL TYPE	DIMENSION H
Strong Post W-Beam	1'-9 5/8 "
Strong Post Rubrail (W-Beam)	2'-0"
Modified or Strong Post Thrie Beam	2'-0"

ORIGINAL PLAN	SURVEY PLOTTED BY	DATE
	DRAWN BY & JW	
	PLOTTED BY "	
NOTE BOOK	DESIGNED BY C. ROZONAL	
	QUANTITIES BY C. ROZONAL	
No.	CHECKED BY E. RM	

REDUCED PLAN
(HALF SIZE)
0 1 2 3
3 INCHES OF ORIGINAL PLAN

STATE OF HAWAII
DEPARTMENT OF TRANSPORTATION
HIGHWAYS DIVISION

GUARDRAIL DETAILS & NOTES

HAWAII BELT ROAD RESURFACING
East Paauilo Bridge to Kaala Bridge
Federal Aid-Project No. NH-019-2(55)

Scale: As Noted Date: April 2004

FED. ROAD DIST. NO.	STATE	FED. AID PROJ. NO.	FISCAL YEAR	SHEET NO.	TOTAL SHEETS
HAWAII	HAW.	NH-019-2(55)	2004	38	112

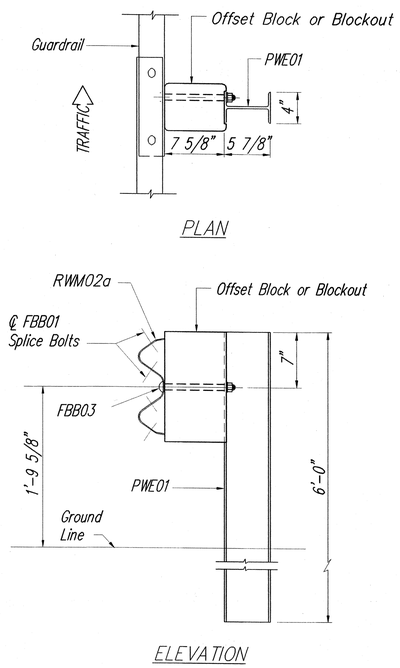

STRONG POST W-BEAM GUARDRAIL (SGR04a)

N.T.S.

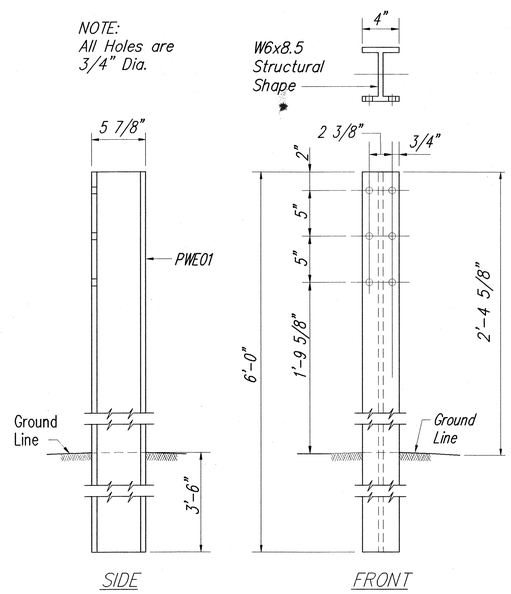

W-BEAM STRONG POST (PWE01)

N.T.S.

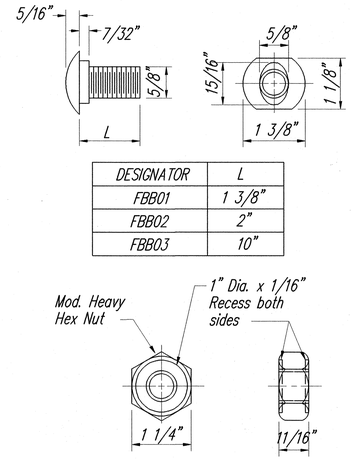

DESIGNATOR	L
FBB01	1 3/8"
FBB02	2"
FBB03	10"

GUARDRAIL BOLTS AND RECESSED NUT

N.T.S.

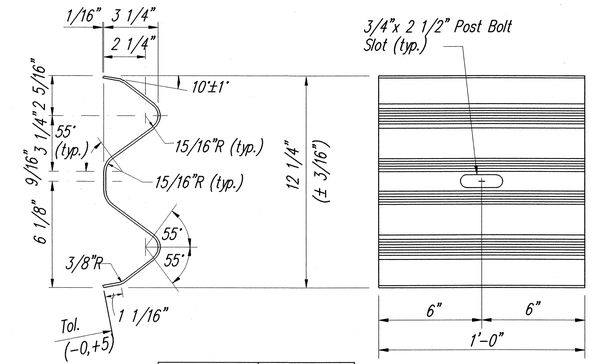

DESIGNATOR	BASE METAL THICKNESS
RWB01a	12 Gauge

W-BEAM BACK-UP-PLATE (RWB01a)

N.T.S.

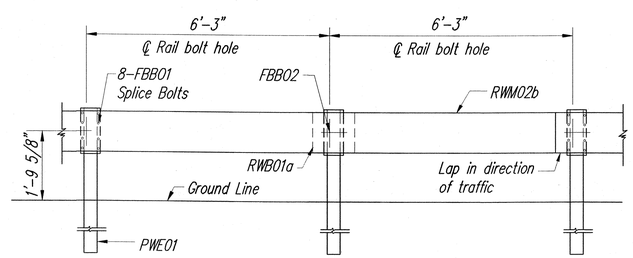

STRONG POST W-BEAM GUARDRAIL WITH RECYCLED OFFSET BLOCK OR PLASTIC BLOCKOUT

N.T.S.

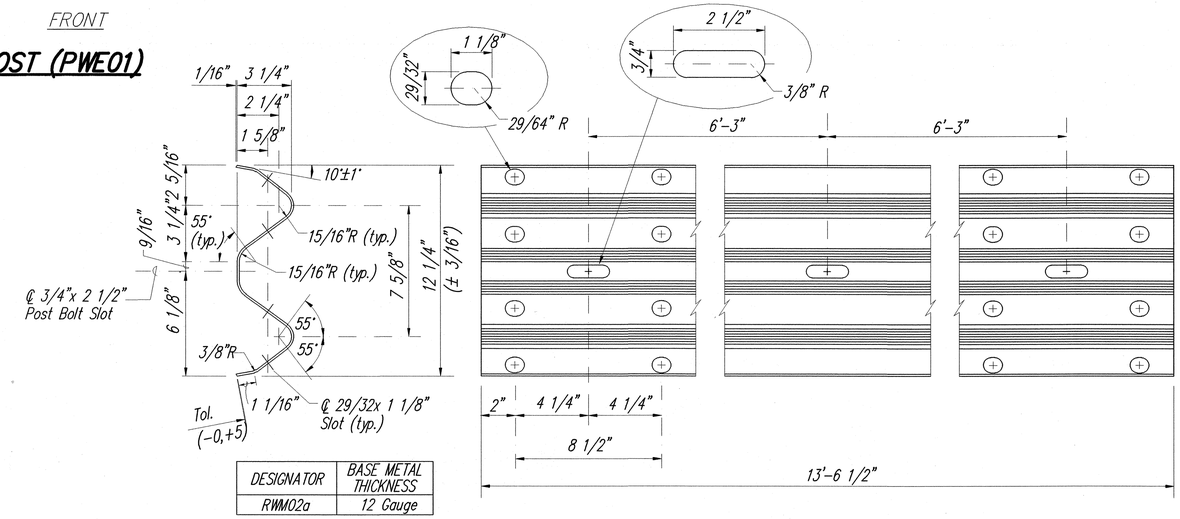

DESIGNATOR	BASE METAL THICKNESS
RWM02a	12 Gauge

2 SPACE W-BEAM GUARDRAIL (RWM02a)

N.T.S.

REDUCED PLAN
(HALF SIZE)
0 1 2 3
3 INCHES OF ORIGINAL PLAN

ORIGINAL PLAN	SURVEY PLOTTED BY	DATE
	DRAWN BY G.W.	4/04
	TRACED BY "	"
NOTE BOOK	DESIGNED BY C. MCDONALD	4/04
	QUANTITIES BY C. MCDONALD	4/04
No.	CHECKED BY E. IKA	4/04

STATE OF HAWAII
DEPARTMENT OF TRANSPORTATION
HIGHWAYS DIVISION

STRONG POST W-BEAM GUARDRAIL

HAWAII BELT ROAD RESURFACING
East Paauilo Bridge to Kaala Bridge
Federal Aid-Project No. NH-019-2(55)

Scale: As Noted Date: April 2004

SHEET No. C-36 OF 49 SHEETS

FED. ROAD DIST. NO.	STATE	FED. AID PROJ. NO.	FISCAL YEAR	SHEET NO.	TOTAL SHEETS
HAWAII	HAW.	NH-019-2(55)	2004	39	112

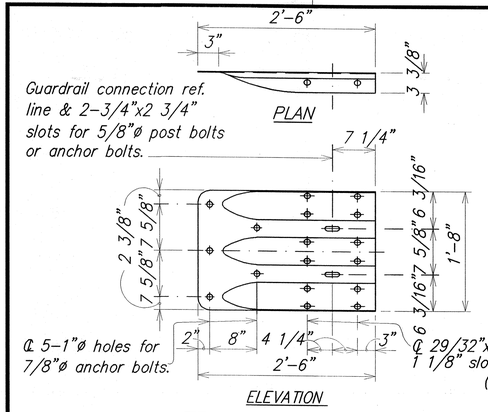

TERMINAL CONNECTOR

Scale: 1" = 1'-0"

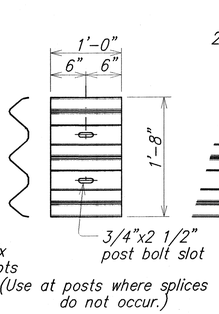

BACKUP PLATE

Scale: 1" = 1'-0"

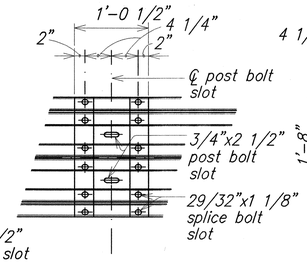

RAIL SPLICE

Scale: 1" = 1'-0"

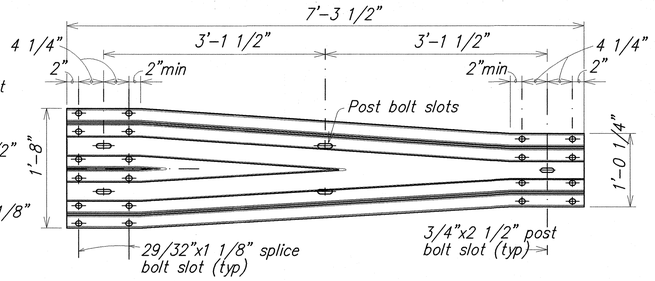

TRANSITION SECTION

Scale: 1" = 1'-0"

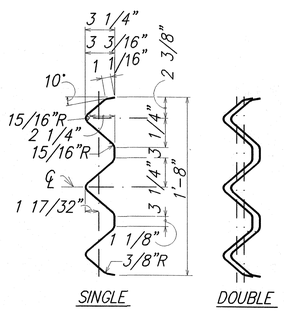

SECTION THRU RAIL ELEMENT

Scale: 1 1/2" = 1'-0"

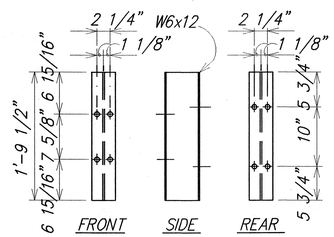

SPACER BLOCK DETAILS

Scale: 1" = 1'-0"

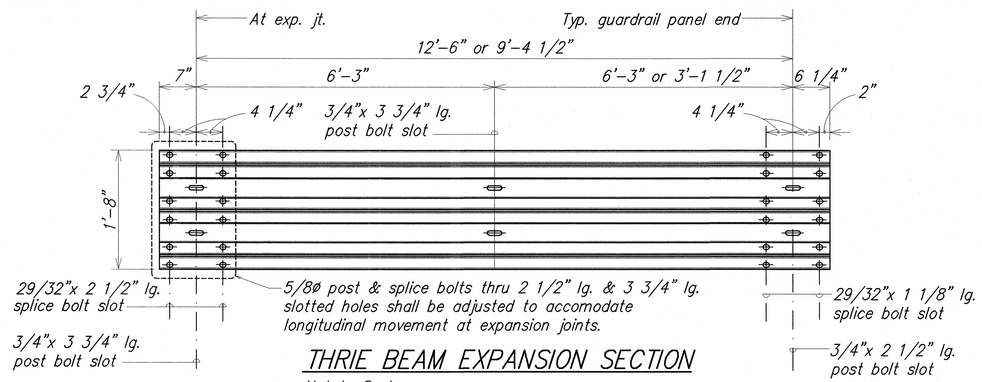

THRIE BEAM EXPANSION SECTION

Not to Scale

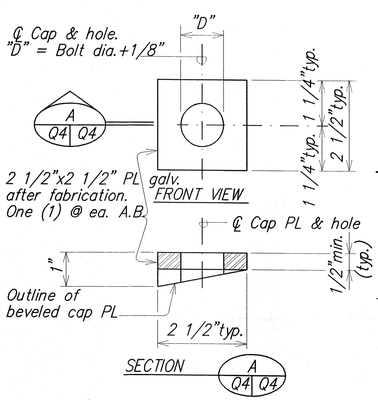

CAP (BEARING) PLATE DETAIL

Scale: 6" = 1'-0"

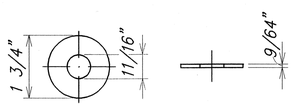

STEEL WASHER FOR 5/8"ø BOLT

Scale: 6" = 1'-0"

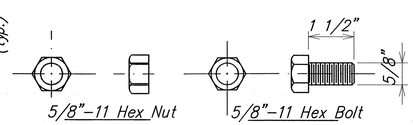

5/8"ø HEX BOLT & NUT

Scale: 6" = 1'-0"

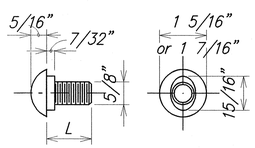

L	Thread Length
1 1/4"	Full thread
2"	1 1/2"min. thread length

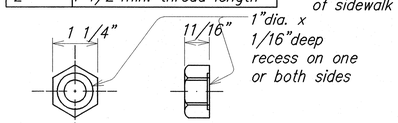

5/8"ø BUTTON HEAD BOLT & RECESS NUT

Scale: 6" = 1'-0"

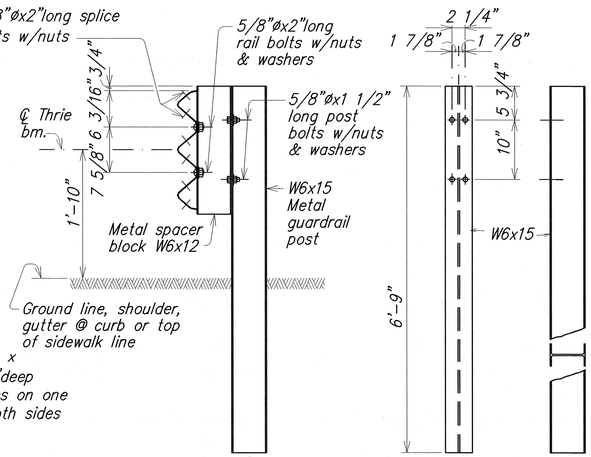

TYPICAL SECTION

METAL GUARDRAIL ON METAL POST WITH METAL SPACER BLOCK

Scale: 1" = 1'-0"

POST DETAILS

Scale: 1" = 1'-0"

METAL GUARDRAIL TYPE 3 THRIE BEAM AND APPURTENANCES DETAILS

NOTES:

The work necessary to connect guardrail to concrete end post shall include all labor, materials, tools, equipment and incidentals necessary to complete the work and will not be paid for separately.

Lap terminal connector and rail element in direction of traffic to prevent snagging.

All anchor bolts shall be high strength bolts conforming to the requirements of ASTM 325 and Standard Specification, Section 713.04.

Anchor bolt length shall be such that a snug fit of the elements and full thread engagement plus 1/4" (max) is attained.

"Terminal Connector", "Transition Section" and thrie beam shall be fabricated from 10gauge steel conforming to the requirements of AASHTO M 180, Type II, Class B.

"Terminal Connector" and standard spacer, including all anchor bolts, cap PL, nuts and washers, shall be hot-dip galvanized after fabrication.

Cap PL shall be fabricated from ASTM A 36.

First 25'-0" of guardrail adjoining "Terminal Connector" shall be galvanized steel and supports spaced as shown on the detail drawings. This section of rail shall be placed on tangent to end post or parallel to roadway, unless conditions at site renders it impossible to do so. Flare point to be determined in field.

Double (nest 1st panel) thrie beam elements at all end post connections, except on highways with one-way traffic pattern, use single thrie beam elements at end post on trailing end only.

Where double (nested) beam occur, 12" "Back-up Plate" not required.

Heads of through anchor bolts shall be placed on the traffic side of the rail.

All steel shapes, rails and plates shall conform to ASTM A 36 specifications.

ORIGINAL PLAN	SURVEY PLOTTED BY		DATE
	DRAWN BY	G.M.	"
NOTE BOOK	TRACED BY	"	4/04
	DESIGNED BY	C. MCDONALD	4/04
	QUANTITIES BY	C. MCDONALD	4/04
No.	CHECKED BY	E. IDA	4/04

STATE OF HAWAII
DEPARTMENT OF TRANSPORTATION
HIGHWAYS DIVISION

METAL GUARDRAIL TYPE 3 THRIE BEAM

HAWAII BELT ROAD RESURFACING
East Paauilo Bridge to Kaala Bridge
Federal Aid-Project No. NH-019-2(55)

Scale: As Noted Date: April 2004

SHEET No. C-37 OF 49 SHEETS

T:\0895-13-C - Hawaii Belt Road Resurfacing\DWG\C37-GUARDRAIL_DETAILS3.dwg, 04/13/04 11:01:52 AM

FED. ROAD DIST. NO.	STATE	FED. AID PROJ. NO.	FISCAL YEAR	SHEET NO.	TOTAL SHEETS
HAWAII	HAW.	NH-019-2(55)	2004	40	112

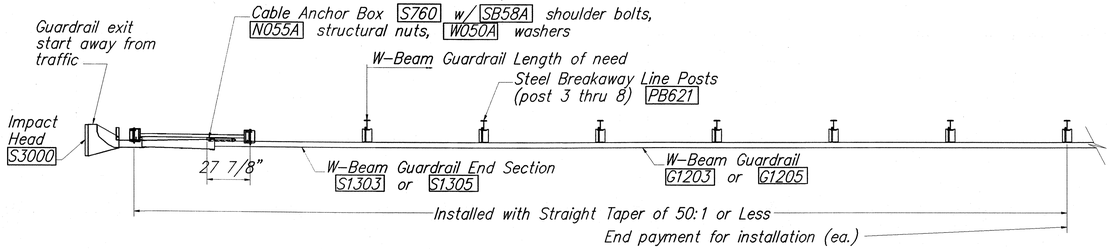

PLAN

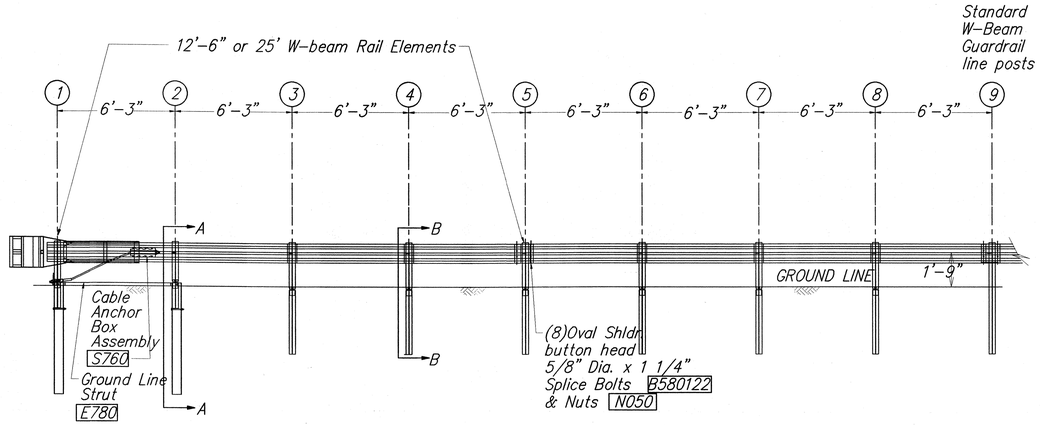

ELEVATION

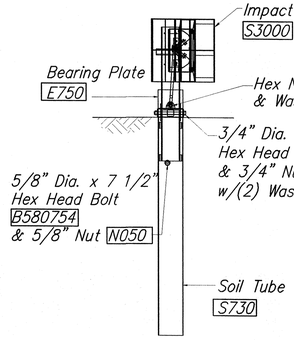

FRONT VIEW OF POST 1

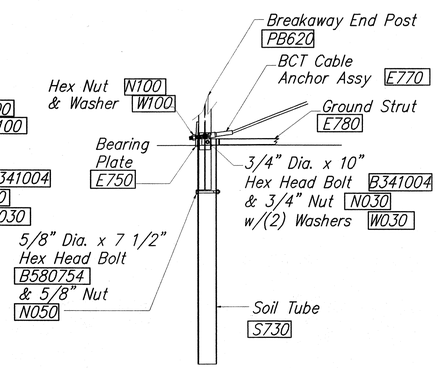

PARTIAL VIEW OF POST 1

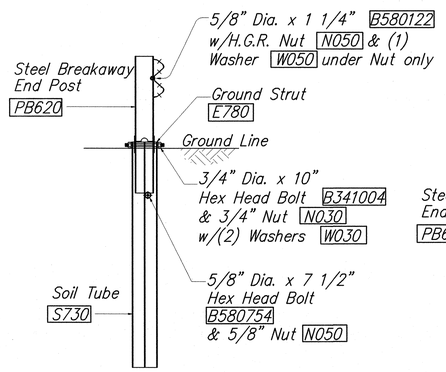

SECTION A-A
at Post #2

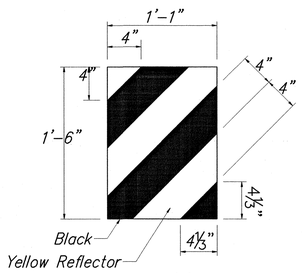

IHRM(R)
IMPACT HEAD REFLECTOR MARKER INSERT DETAIL

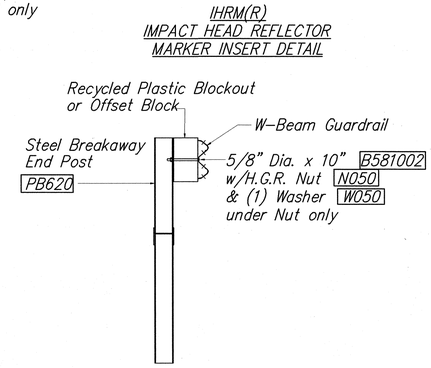

SECTION B-B
typical @ Post 3 thru 8

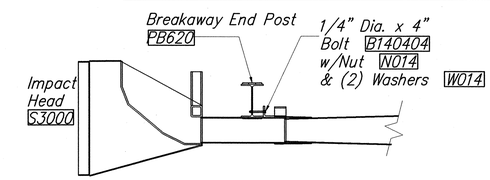

IMPACT HEAD CONNECTION DETAIL

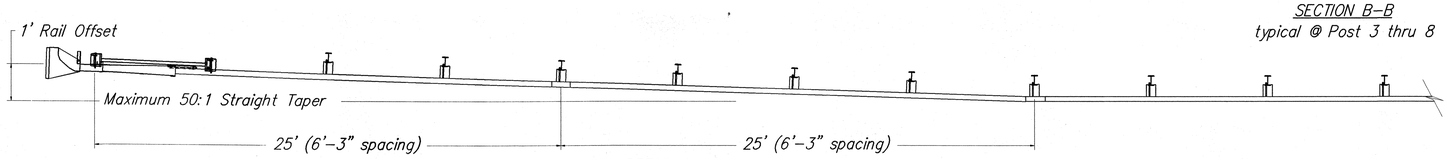

DETAIL A
50:1 flare rate

GENERAL NOTES:

1. Breakaway steel posts are required with the Sequential Kinking Terminal.
2. All bolts, nuts, cable assemblies, cable anchors and bearing plates shall be galvanized.
3. When the Sequential Kinking Terminal is selected as the end treatment for W-Beam Guardrail installation, the W-Beam Guardrail will be flared at a rate of 50:1 to prevent the impact head from encroaching on the shoulder. The flare is not required and may be decreased or eliminated for specific installations.
4. The soil tube shall not protrude more than 4" above ground (measured) along a 5' cord). Site grading may be necessary to meet this requirement.
5. The soil tubes may be driven with an approved driving head. They shall not be driven with the post in the tube. If the soil tubes are placed in drilled holes, the backfill material must be satisfactorily compacted to prevent settlement.
6. When rock is encountered during excavation, a 12" dia. post hole, 20" deep may be used if approved by the Engineer. Granular material will be placed in the bottom of the hole approx. 2" deep to provide drainage. The soil tubes will be field cut to length, placed in the hole and backfilled with adequately compacted material excavated from the hole.
7. The breakaway cable assembly must be taut. A locking device, (vice grips or channel lock pliers) should be used to prevent the cable from twisting when tightening nuts.
8. A special site evaluation should be considered prior to using the Sequential Kinking Terminal where there is less than 25' between the outlet side of the Sequential Kinking Terminal and any adjacent driving lane.
9. (R) or (L) indicates right or left Impact Head Reflector Marker (IHRM). Providing and installing of IHRM shall be considered incidental to end treatment.
10. The stripes for IHRM shall slope downward at an angle of 45^ towards the side of the end treatment that traffic is to pass.

ITEM NO.	QTY.	BILL OF MATERIALS
S3000	1	IMPACT HEAD
S1303/S1305	1	W-BEAM GUARDRAIL END SECTION 12 GA. 12.5' or 25'
G1203/G1205	3/1	W-BEAM GUARDRAIL, 12 GA., 12.5' or 25'
S730	2	*FOUNDATION SOIL TUBE, 6" x 8" x 72"
E750	1	BEARING PLATE
S760	1	CABLE ANCHOR BOX
E770	1	BCT CABLE ANCHOR ASSEMBLY
E780	1	GROUND STRUT
PB620	2	STEEL BREAKAWAY END POSTS
PB621	6	STEEL BREAKAWAY LINE POSTS
	6	RECYCLED PLASTIC BLOCKOUTS OR OFFSET BLOCK
	1	IMPACT HEAD REFLECTOR MARKER - IHRM(R) OR (L)
		HARDWARE
B580122	17/33	5/8" Dia. x 1 1/4" SPLICE BOLTS, POST #2
B580754	2	5/8" Dia. x 7 1/2" HEX BOLTS
B341004	2	3/4" Dia. x 10" HEX BOLTS
B341002	6	5/8" Dia. x 10" H.G.R. BOLT (POST 2 ONLY)
B581802	6	5/8" Dia. x 18" H.G.R. BOLT (POST 3 THRU 8)
N050	26/42	5/8" Dia. H.G.R. NUT (SPLICE 17/33, SOIL TUBES 2, POST 2 THRU 8)
N030	2	3/4" Dia. HEX NUTS
W050	7	H.G.R. WASHER
W030	4	3/4" ID WASHER
N100	2	1" ANCHOR CABLE HEX NUT
W100	2	1" ANCHOR CABLE WASHER
B140404	2	1/4" x 4" HEX BOLT
N014	2	1/4" HEX NUT
W014	4	1/4" WASHER
SB58A	8	CABLE ANCHOR BOX SHOULDER BOLTS
N055A	8	1/2" A325 STRUCTURAL NUTS
W050A	16	1 1/16" OD x 9/16" ID A325 STR. WASHER

Foundation Tube Options For Posts 1 & 2
*6'-0" Split Foundation Tubes S730
*6'-0" Solid Foundation Tubes E731
*5'-0" Foundation Tubes S735 W/Soil Plates SP600
*4'-6" Foundation Tubes E735 W/Soil Plates SP600

ORIGINAL PLAN	SURVEY PLOTTED BY	DATE
	DRAWN BY & JW	4/04
NOTE BOOK	TRACED BY	4/04
	DESIGNED BY C. MCDONALD	4/04
	QUANTITIES BY C. MCDONALD	4/04
No.	CHECKED BY E. RIM	4/04

REDUCED PLAN
(HALF SIZE)
0 1 2 3
3 INCHES OF ORIGINAL PLAN

STATE OF HAWAII
DEPARTMENT OF TRANSPORTATION
HIGHWAYS DIVISION

SKT-350
SEQUENTIAL KINKING TERMINAL
HAWAII BELT ROAD RESURFACING
East Paauilo Bridge to Kaala Bridge
Federal Aid-Project No. NH-019-2(55)

Scale: As Noted Date: April 2004

SHEET No. C-38 OF 49 SHEETS

FED. ROAD DIST. NO.	STATE	FED. AID PROJ. NO.	FISCAL YEAR	SHEET NO.	TOTAL SHEETS
HAWAII	HAW.	NH-019-2(55)	2004	41	112

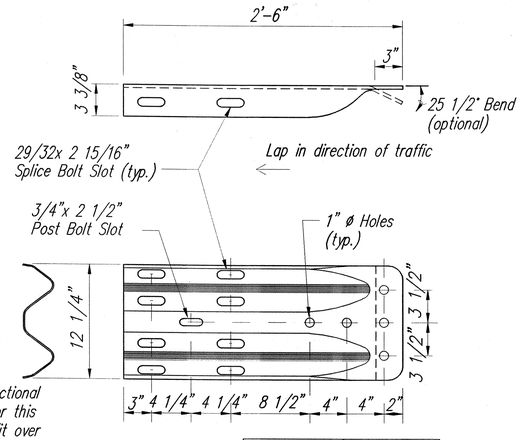

The cross-sectional dimensions for this part are to fit over part RWM02a on the approach end and under part RWM02a on the trailing end.

DESIGNATOR	BASE METAL THICKNESS
RWE02b	10 Gauge

W-BEAM TERMINAL CONNECTOR (RWE02b)

N.T.S.

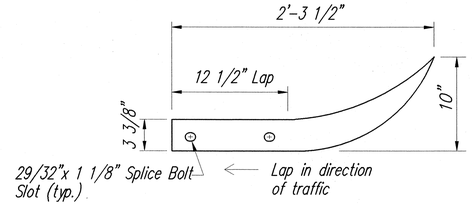

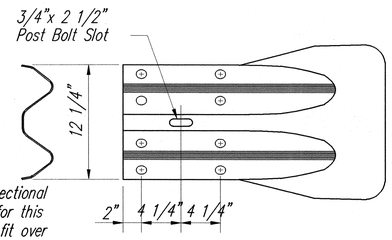

The cross-sectional dimensions for this part are to fit over part RWM02a on the approach end and under part RWM02a on the trailing end.

DESIGNATOR	BASE METAL THICKNESS
RWE01a	12 Gauge

W-BEAM END SECTION (FLARED RWE01a)

N.T.S.

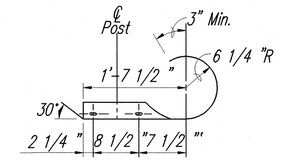

PLAN

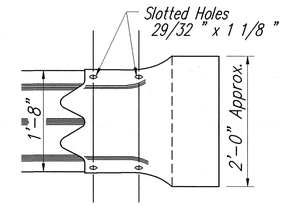

ELEVATION

DESIGNATOR	BASE METAL THICKNESS
RTE02b	10 Gauge

THRIE-BEAM SECTION (ROUNDED) (RTE02b)

N.T.S.

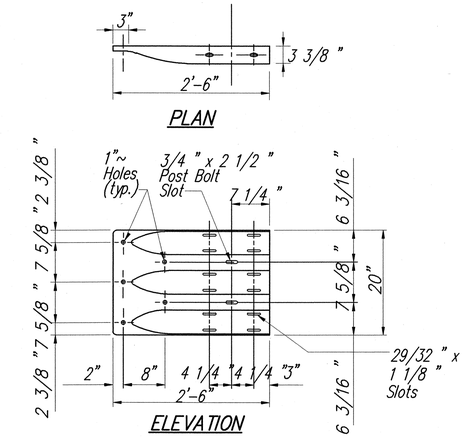

DESIGNATOR	BASE METAL THICKNESS
RTE01b	10 Gauge

THRIE-BEAM TERMINAL CONNECTOR (RTE01b)

N.T.S.

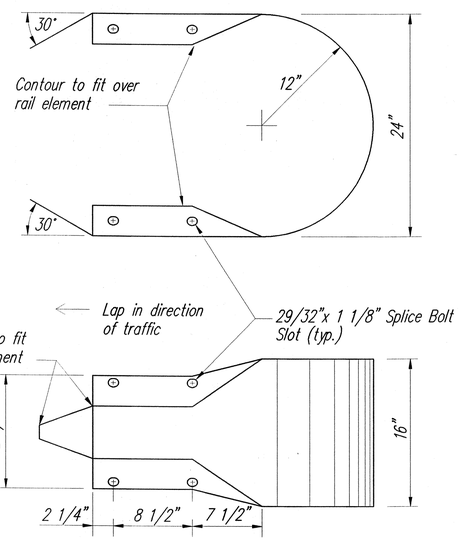

The cross-sectional dimensions for this part are to fit over part RWM02a

DESIGNATOR	BASE METAL THICKNESS
RWE06b	12 Gauge

W-BEAM END SECTION (BUFFER RWE06a)

N.T.S.

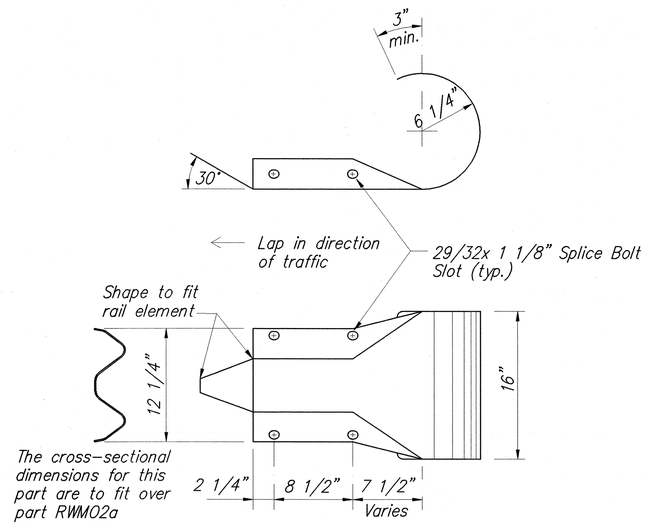

The cross-sectional dimensions for this part are to fit over part RWM02a

DESIGNATOR	BASE METAL THICKNESS
RWE03a	12 Gauge

W-BEAM END SECTION (ROUNDED RWE03a)

N.T.S.

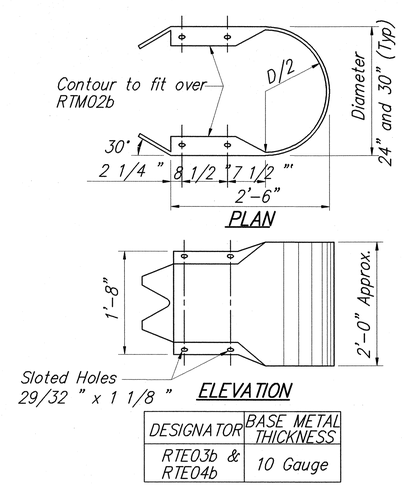

DESIGNATOR	BASE METAL THICKNESS
RTE03b & RTE04b	10 Gauge

THRIE-BEAM END SECTION (BUFFER RTE03b or RTE04b)

N.T.S.

REDUCED PLAN
(HALF SIZE)
0 1 2 3
3 INCHES OF ORIGINAL PLAN

ORIGINAL PLAN	SURVEY PLOTTED BY	DATE
	DRAWN BY & JW	4/04
NOTE BOOK	TRACED BY	4/04
	DESIGNED BY C. WOOMAD	4/04
	QUANTITIES BY C. WOOMAD	4/04
No.	CHECKED BY E. RM	4/04

STATE OF HAWAII
DEPARTMENT OF TRANSPORTATION
HIGHWAYS DIVISION

GUARDRAIL TERMINAL CONNECTIONS AND END SECTIONS

HAWAII BELT ROAD RESURFACING
East Paauilo Bridge to Kaala Bridge
Federal Aid-Project No. NH-019-2(55)

Scale: As Noted Date: April 2004

FED. ROAD DIST. NO.	STATE	FED. AID PROJ. NO.	FISCAL YEAR	SHEET NO.	TOTAL SHEETS
HAWAII	HAW.	NH-019-2(55)	2004	42	112

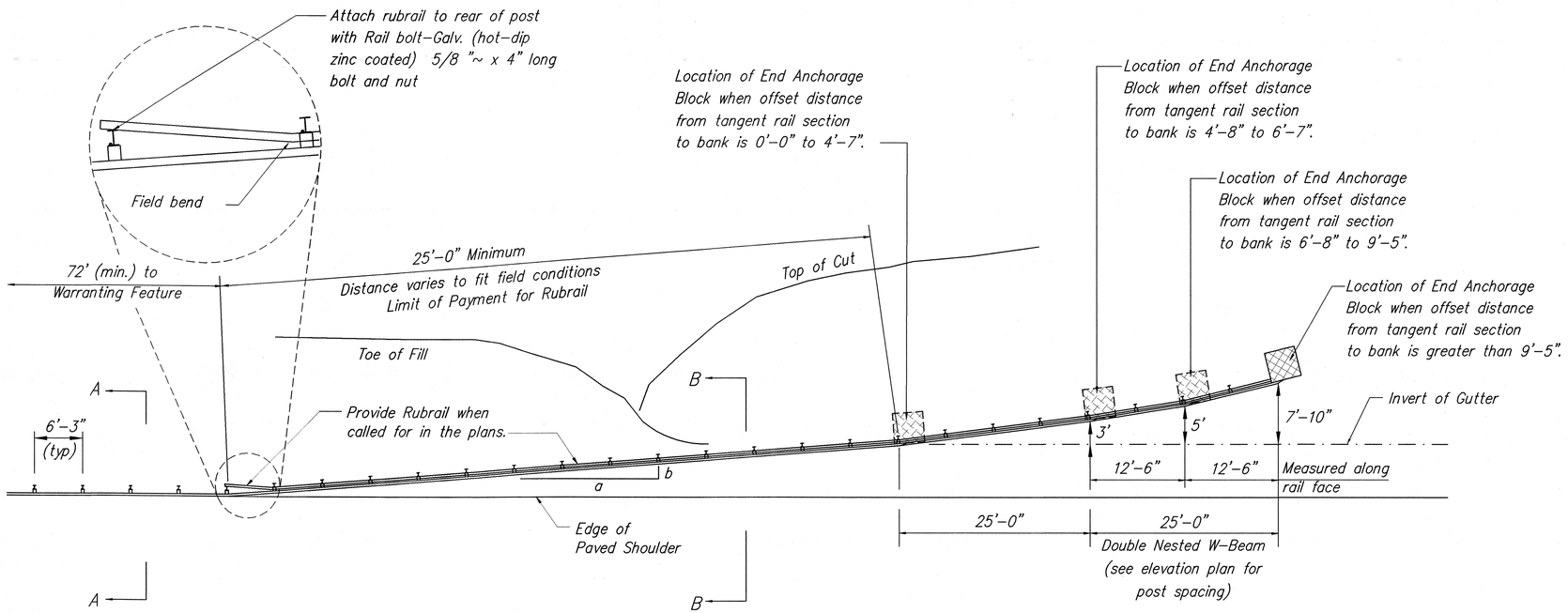

PLAN

Design speed mph	a:b
68	15:1
62	13:1
56	12:1
50	11:1
43	10:1
37	9:1
31	7:1

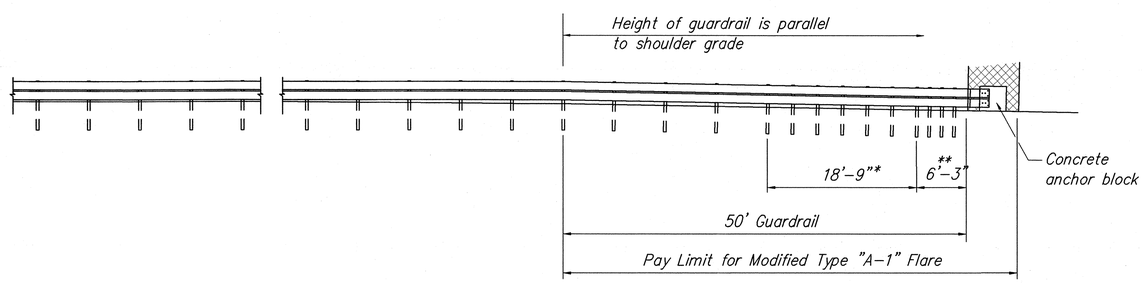

* Posts at 3'-1 1/2 " o.c.

** Posts at 1'-6 3/4 " o.c.

ELEVATION (Profile Along Rail)

GENERAL NOTES

1. All posts are 6'-0" in length within the 50'-0" pay limit for the Modified Type "A-1" Flare without rubrail.
2. Whenever swales or a change in grade is encountered within the 50'-0" pay limit for the Modified Type "A-1" Flare, a rubrail shall be installed and all posts shall have a minimum embedment of 4'-0". Post lengths shall be adjusted to provide the minimum embedment.
3. All fasteners, posts, blocks and rail elements shall conform to the latest edition and amendments of "A Guide to Standardized Highway Barrier Rail Hardware", a report prepared and approved by the AASHTO-AGCARTBA Joint Cooperative Committee and HDOT's Statewide Guideline for Permanent Highway Safety Hardware.
4. Limit of payment for Modified Type "A-1" Flare shall be 50'-0" from End Shoe including Rubrail (when applicable), Anchor Block and GRP work.
5. Excavation, Anchor Block, Backfill and GRP work shall be considered incidental to the Modified Type "A-1" Flare.

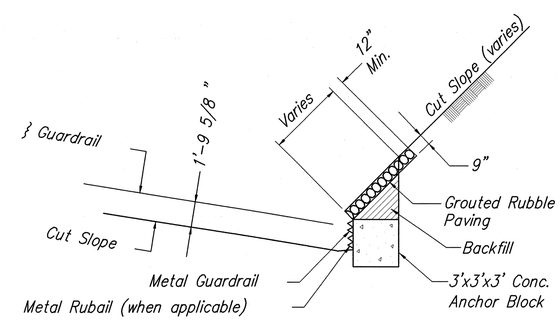

ANCHOR BLOCK IN CUT SECTION

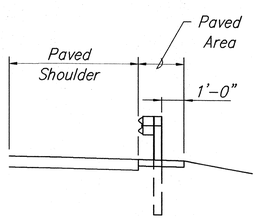

Section A-A

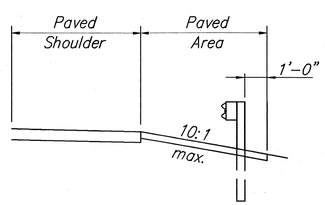

Section B-B

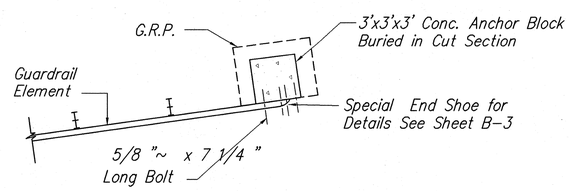

PLAN - ANCHOR BLOCK IN CUT SECTION

ORIGINAL PLAN	SURVEY PLOTTED BY	DATE
	DRAWN BY K.JW	4/04
	TRACED BY " "	4/04
NOTE BOOK	DESIGNED BY C. WOODWARD	4/04
	QUANTITIES BY C. WOODWARD	4/04
No.	CHECKED BY E. RH	4/04

STATE OF HAWAII
DEPARTMENT OF TRANSPORTATION
HIGHWAYS DIVISION

MODIFIED TYPE "A-1" FLARE

HAWAII BELT ROAD RESURFACING
East Paauilo Bridge to Kaala Bridge
Federal Aid-Project No. NH-019-2(55)

Scale: As Noted Date: April 2004

FED. ROAD DIST. NO.	STATE	FED. AID PROJ. NO.	FISCAL YEAR	SHEET NO.	TOTAL SHEETS
HAWAII	HAW.	NH-019-2(55)	2004	43	112

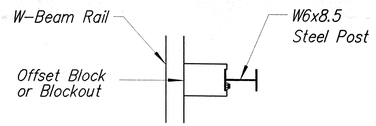

Plan

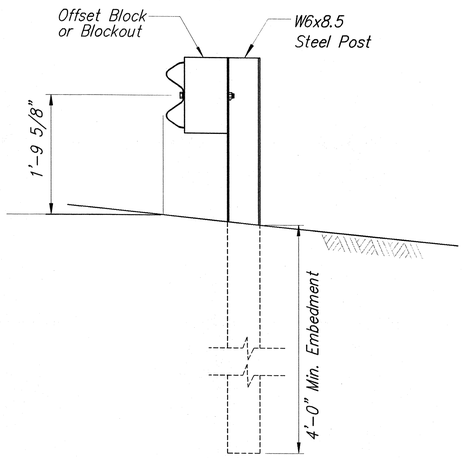

Elevation

STRONG POST W-BEAM GUARDRAIL

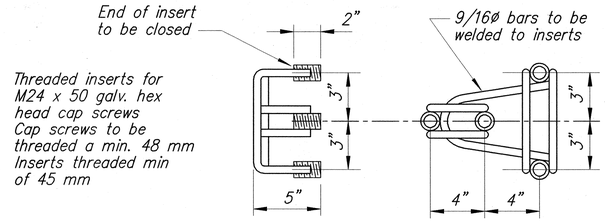

ANCHOR ASSEMBLY
CONCRETE BLOCK ANCHOR

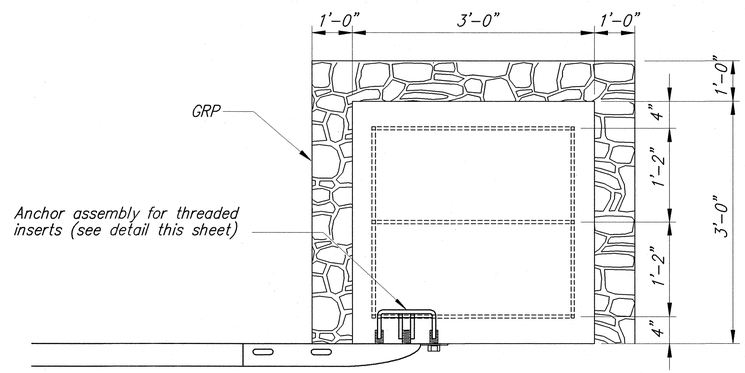

Plan

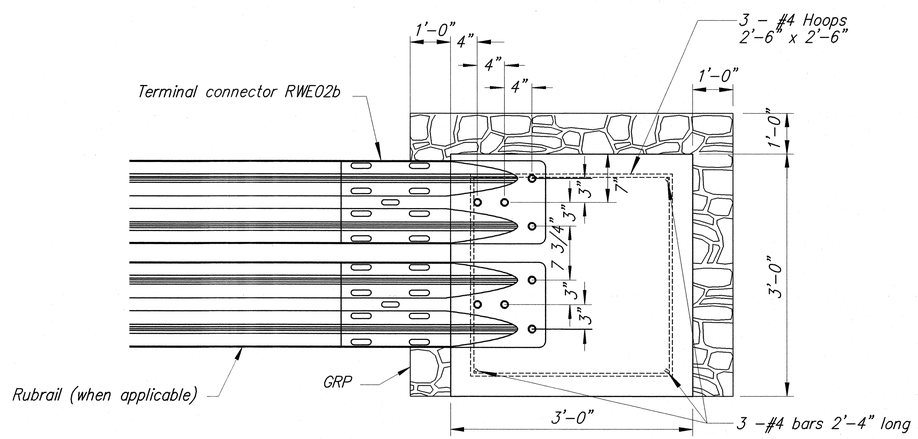

Elevation

CONCRETE BLOCK ANCHOR
(3' X 3' X 3')

BACKSLOPE ANCHOR TERMINAL END ANCHORAGE DETAILS
MODIFIED TYPE "A-1" FLARE

Note:

All fasteners, posts, blocks and rail elements shall conform to the latest edition and amendments of "A Guide to Standardized Highway Barrier Rail Hardware," a report prepared and approved by the AASHTO-AGCARTBA Joint Cooperative Committee and HDOT's Statewide Guideline for Permanent Highway Safety Hardware.

ORIGINAL PLAN	SURVEY PLOTTED BY	DATE
	SURVEY BY	
	TRACED BY	
NOTE BOOK	DESIGNED BY C. KOZAWA	
	QUANTITIES BY C. KOZAWA	
No.	CHECKED BY	

STATE OF HAWAII
DEPARTMENT OF TRANSPORTATION
HIGHWAYS DIVISION

MODIFIED TYPE "A-1" FLARE DETAILS

HAWAII BELT ROAD RESURFACING
East Paauilo Bridge to Kaala Bridge
Federal Aid-Project No. NH-019-2(55)

Scale: As Noted Date: April 2004

SHEET No. **C-41** OF **49** SHEETS

T:\0886-13-C - Hawaii Belt Road Resurfacing\DWG\C41-GUARDRAIL_DETAILT.dwg, 04/13/04 11:04:10 AM

FED. ROAD DIST. NO.	STATE	FED. AID PROJ. NO.	FISCAL YEAR	SHEET NO.	TOTAL SHEETS
HAWAII	HAW.	NH-019-2(55)	2004	44	112

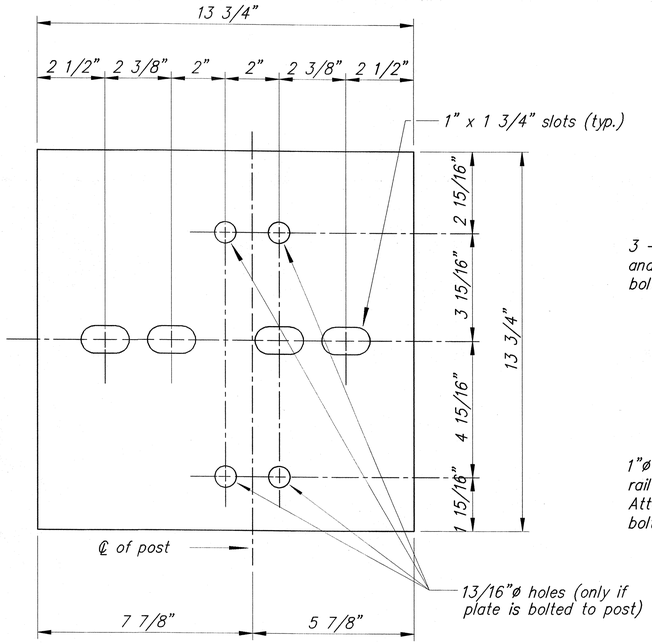

Steel Plate – 1/2"

(Hot-dip Zinc Coated Galvanized-Welded or Bolted to Post)

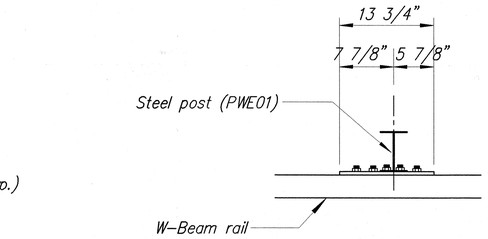

Plan

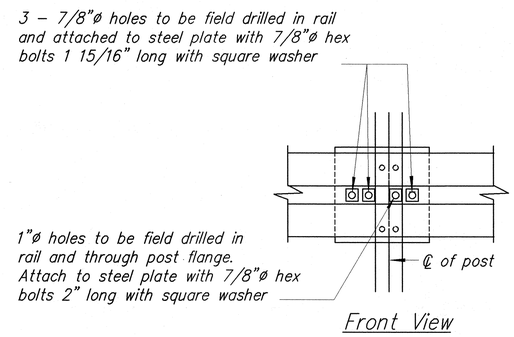

Front View

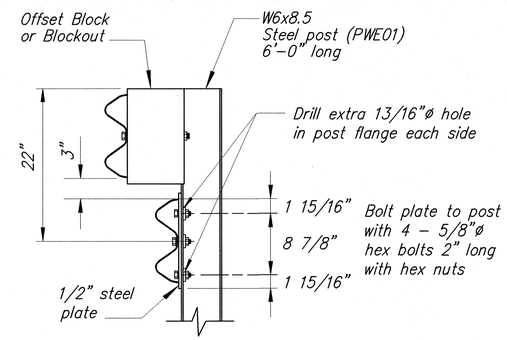

Elevation

RUBRAIL ANCHOR DETAILS

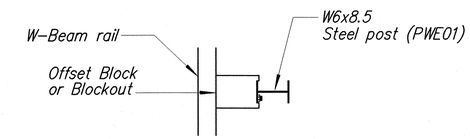

Plan

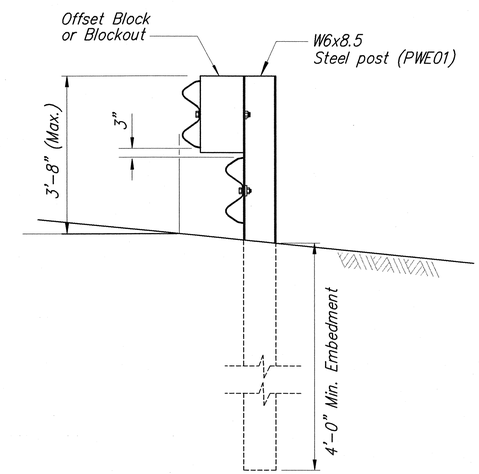

Elevation

STEEL POST GUARDRAIL WITH RUBRAIL

Note:

All fasteners, posts, blocks and rail elements shall conform to the latest edition and amendments of "A Guide to Standardized Highway Barrier Rail Hardware", a report prepared and approved by the AASHTO-AGCARTBA Joint Cooperative Committee.

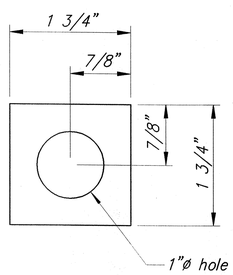

Square Washer

(3/16" Thick – Hot-dip Zinc Coated Galvanized)

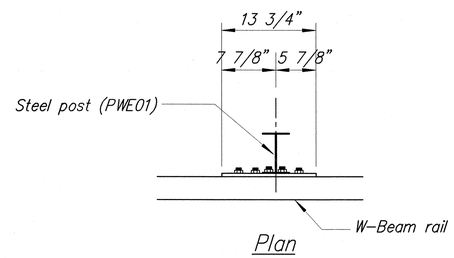

Plan

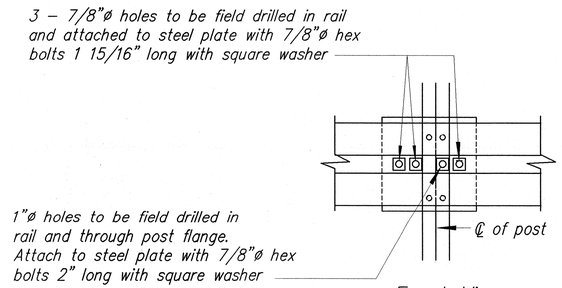

Front View

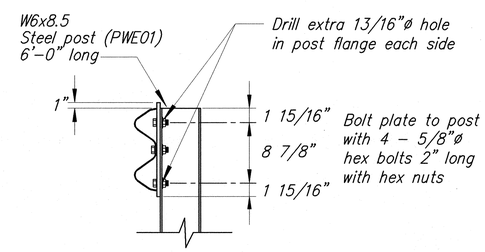

Elevation

POST ANCHOR DETAILS

RUBRAIL DETAIL FOR MODIFIED TYPE "A-1" FLARE (WHEN CALLED FOR IN PLANS)

ORIGINAL PLAN	SURVEY PLOTTED BY	DATE
	DRAWN BY G.M.	" 4.04
NOTE BOOK	TRACED BY	" 4.04
	DESIGNED BY C. MORIMOTO	" 4.04
	QUANTITIES BY C. MORIMOTO	" 4.04
No.	CHECKED BY E. IBA	" 4.04

STATE OF HAWAII
DEPARTMENT OF TRANSPORTATION
HIGHWAYS DIVISION

MODIFIED TYPE "A-1" FLARE RUBRAIL DETAILS

HAWAII BELT ROAD RESURFACING
East Paauilo Bridge to Kaala Bridge
Federal Aid-Project No. NH-019-2(55)

Scale: As Noted Date: April 2004

SHEET No. C-42 OF 49 SHEETS

T:\0595-13-C - Hawaii Belt Road Resurfacing\DWG\C42-GUARDRAIL_DETAILS.dwg, 04/13/04 11:34:48 AM

FED. ROAD DIST. NO.	STATE	FED. AID PROJ. NO.	FISCAL YEAR	SHEET NO.	TOTAL SHEETS
HAWAII	HAW.	NH-019-2(55)	2004	45	112

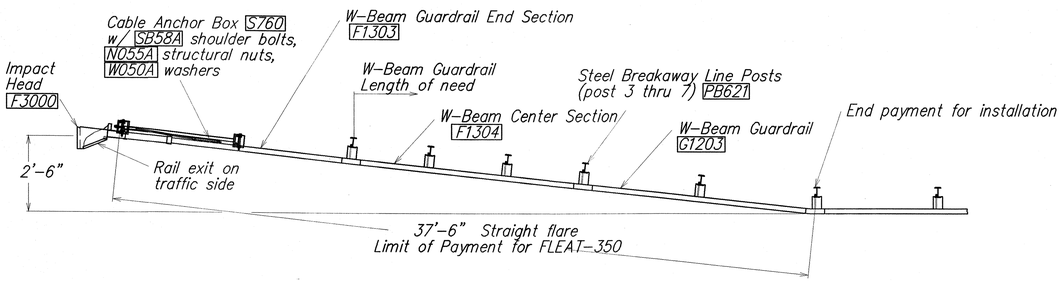

PLAN

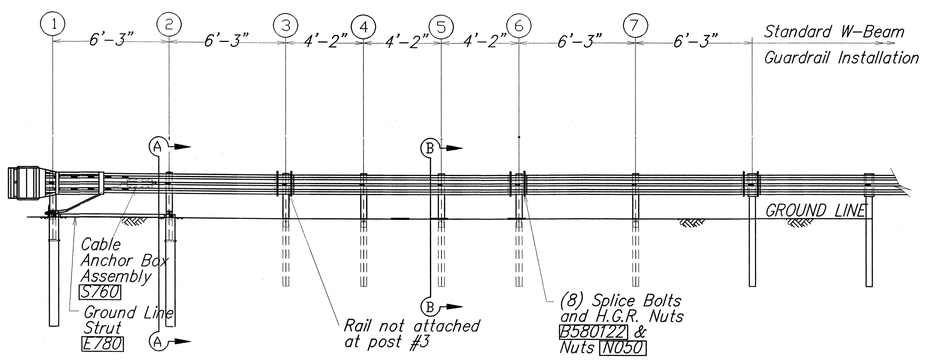

ELEVATION

GENERAL NOTES

1. Breakaway posts are required with the FLEAT Terminal.
2. All bolts, nuts, cable assemblies, cable anchors and bearing plates shall be galvanized.
3. The soil tubes shall not protrude more than 4" above ground (measured along a 5' cord). Site grading may be necessary to meet this requirement.
4. The soil tubes may be driven with an approved driving head. Soil tubes should not be driven with the post in the tube. If the tubes are placed in drilled holes, the backfill material must be satisfactorily compacted to prevent settlement.
5. When rock is encountered during excavation, a 12" Dia. post hole, 20" deep may be used if approved by the Engineer. Granular material will be placed in the bottom of the hole approx. 2 1/2" deep to provide drainage. The soil tubes will be field cut to length, placed in the hole and backfilled with adequately compacted material excavated from the hole.
6. The breakaway cable assembly must be taut. A locking device, (vice grips or channel lock pliers) should be used to prevent the cable from twisting when tightening nuts.
7. (R) or (L) indicates right or left Impact Head Reflector Marker (IHRM). Providing and installing of IHRM shall be considered incidental to end treatment.
8. The stripes for IHRM shall slope downward at an angle of 45^ towards the side of the end treatment that traffic is to pass.

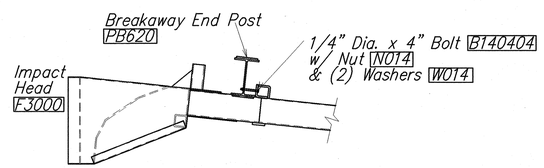

IMPACT HEAD CONNECTING DETAIL

ITEM NO.	QTY	BILL OF MATERIALS
F3000	1	IMPACT HEAD
F1303	1	W-BEAM GUARDRAIL END SECTION, 12 GA.
F1304	1	W-BEAM GUARDRAIL CENTER SECTION, 12 GA.
G1203	1	W-BEAM GUARDRAIL, 12 GA.
S730	2	*FOUNDATION SOIL TUBE, 6" x 8" x 72"
E750	1	BEARING PLATE
S760	1	CABLE ANCHOR BOX
E770	1	BCT CABLE ANCHOR ASSEMBLY
E780	1	GROUND STRUT
PB620	2	STEEL BREAKAWAY END POST
PB621	5	STEEL BREAKAWAY LINE POST
	5	RECYCLED PLASTIC BLOCKOUT OR OFFSET BLOCK
	1	IMPACT HEAD REFLECTOR MARKER - IHRM(R) OR (L)
		HARDWARE
B580122	25	5/8" Dia. x 1 1/4" SPLICE BOLT, POST #2
B580754	2	5/8" Dia. x 7 1/2" HEX BOLT
B341004	2	3/4" Dia. x 10" HEX BOLT
B581002	5	5/8" Dia.x10" H.G.R. BOLT (POST 3 THRU 7)
N050	32	5/8" Dia. H.G.R. NUT (SPLICE 24, SOIL TUBES 2, POST 2 THRU 7, 6)
N030	2	3/4" Dia. HEX NUT
W050	6	H.G.R. WASHER
W030	4	3/4" ID WASHER
N100	2	1" ANCHOR CABLE HEX NUT
W100	2	1" ANCHOR CABLE WASHER
B140404	2	1/4" x 4" HEX BOLT
N014	2	1/4" HEX NUT
W014	4	1/4" WASHER
SB58A	8	CABLE ANCHOR BOX SHOULDER BOLT
N055A	8	1/2" A325 STRUCTURAL NUT
W050A	16	1 1/16" OD x 9/16" ID A325 STR. WASHER

Foundation Tube Options For Posts 1 & 2

*6'-0" Split Foundation Tubes S730
*6'-0" Solid Foundation Tubes E731
*5'-0" Foundation Tubes S735 W/Soil Plates SP600
*4'-6" Foundation Tubes E735 W/Soil Plates SP600

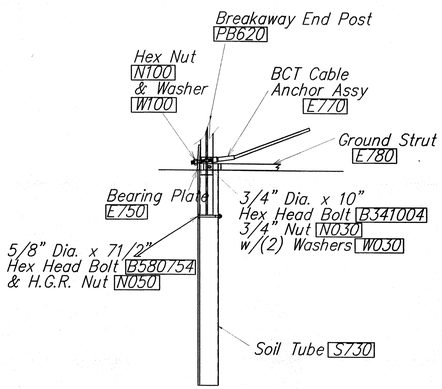

PARTIAL VIEW OF POST 1

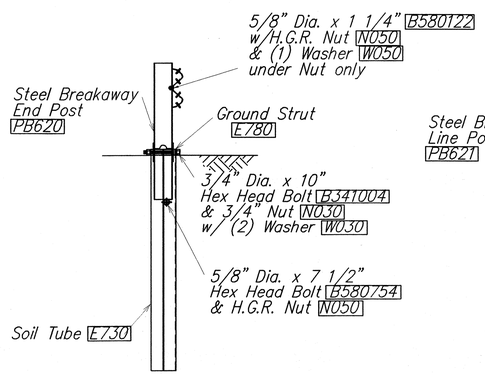

SECTION A-A
(@ Post #2)

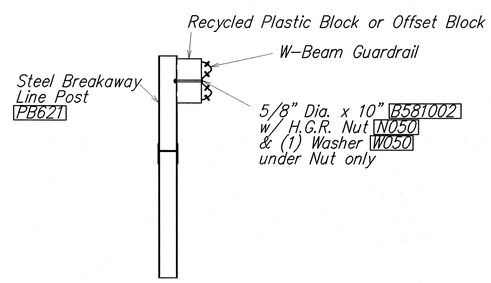

SECTION B-B
(Typical @ Post 3 - 7)
NOTE: RAIL NOT BOLTED @ POST #3

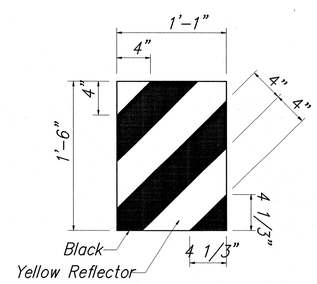

IHRM(R)
IMPACT HEAD REFLECTOR MARKER INSERT DETAIL

ORIGINAL PLAN	SURVEY PLOTTED BY	DATE
	DRAWN BY G.M.	4/04
NOTE BOOK	TRACED BY "	4/04
	DESIGNED BY C. MORIMOTO	4/04
	QUANTITIES BY C. MORIMOTO	4/04
No.	CHECKED BY E.M.	4/04

STATE OF HAWAII
DEPARTMENT OF TRANSPORTATION
HIGHWAYS DIVISION

FLEAT-350

FLARED ENERGY ABSORBING TERMINAL

HAWAII BELT ROAD RESURFACING
East Paauilo Bridge to Kaala Bridge
Federal Aid-Project No. NH-019-2(55)

Scale: As Noted Date: April 2004

SHEET No. C-43 OF 49 SHEETS

T:\0896-13-C - Hawaii Belt Road Resurfacing\DWGS\CAS-GUARDRAIL_DETAILS9.dwg, 04/13/04 11:05:07 AM

FED. ROAD DIST. NO.	STATE	FED. AID PROJ. NO.	FISCAL YEAR	SHEET NO.	TOTAL SHEETS
HAWAII	HAW.	NH-019-2(55)	2004	46	112

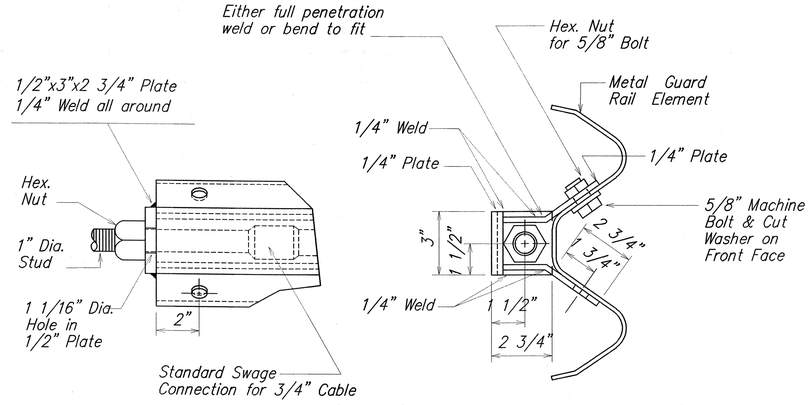

ANCHOR PLATE DETAILS

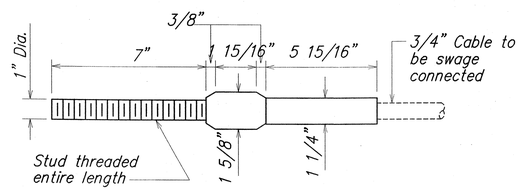

STANDARD SWAGED FITTING AND STUD

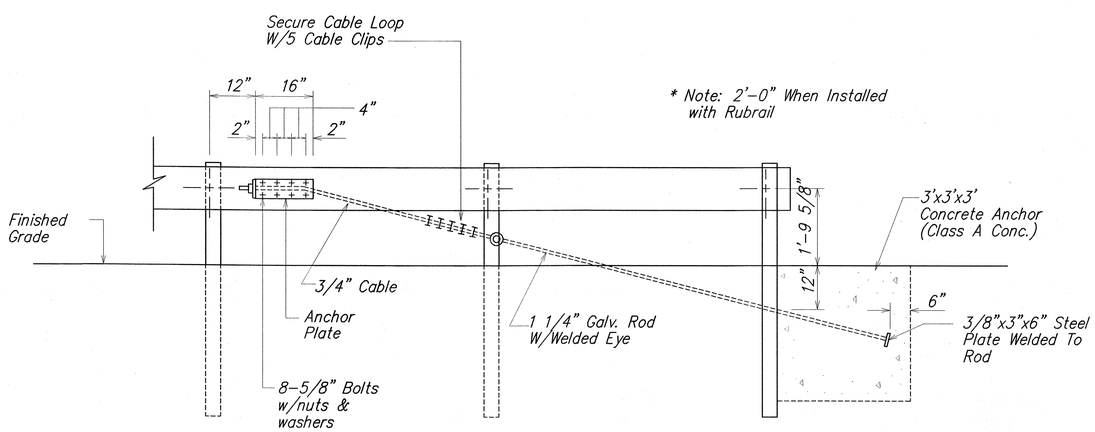

ANCHOR BLOCK DETAIL

1. Concrete, G.R.P., excavation, anchor rod and miscellaneous appurtenances necessary to anchor the guardrail ends shall be incidental to metal guardrail.

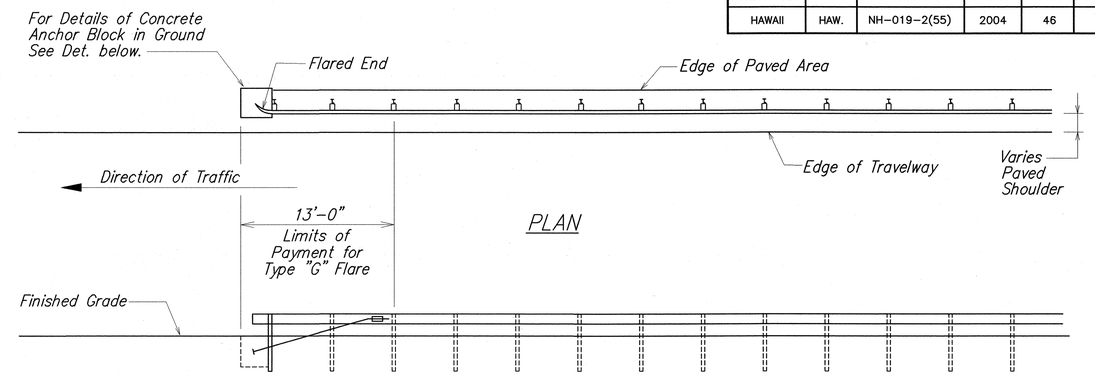

ELEVATION

TYPE "G" FLARE END TERMINAL

NOTE:

Type "G" Modified End Terminal is a site specific end terminal with a taper and radial termini. A site specific detailed drawing is required for all Type "G" Modified End Terminal and must receive Engineer's approval.

The taper (flare rate) of the guardrail shall follow the latest edition of AASHTO'S Roadside Design Guide (currently, Table 5.6 – Suggested Flare Rate for Barrier Design, page 5-21, Jan. 1996 edition).

The radius of the radial termini is an Engineer's judgement based on the site evaluation. The Engineer shall consider safety (minimize the spearing & blunt end situation); degree and potential seriousness of the hazard; bicycle and pedestrian accessibility; maintenance equipment accessibility; Right-of-Way availability; the smallest radii the metal w-beam/thrie-beam railing can be constructed (check with supplier/contractor); posted speed limit; angle of vehicle impact; and aesthetics when designing the Type "G" Modified End Terminal.

During construction, the Contractor shall layout the proposed Type "G" Modified End Terminal and receive approval from the Construction Engineer prior to installation.

Use W-Beam End Section (Rounded RWE03a) for all Modified Type "G" End Terminals.

Limit of Payment for Modified Type "G" End Terminals shall be 50'-0" from End Shoe, including concrete anchor block.

REDUCED PLAN
(HALF SIZE)
0 1 2 3
3 INCHES OF ORIGINAL PLAN

STATE OF HAWAII
DEPARTMENT OF TRANSPORTATION
HIGHWAYS DIVISION

MODIFIED TYPE "G" FLARE

HAWAII BELT ROAD RESURFACING
East Paauilo Bridge to Kaala Bridge
Federal Aid-Project No. NH-019-2(55)

Scale: As Noted Date: April 2004

SHEET No. C-44 OF 49 SHEETS

ORIGINAL PLAN		
	SURVEY PLOTTED BY	DATE
	DRAWN BY K.M.	6/04
NOTE BOOK	TRACED BY " "	6/04
	DESIGNED BY C. MCDONALD	6/04
	QUANTITIES BY C. MCDONALD	6/04
No.	CHECKED BY E. BIN	6/04

FED. ROAD DIST. NO.	STATE	FED. AID PROJ. NO.	FISCAL YEAR	SHEET NO.	TOTAL SHEETS
HAWAII	HAW.	NH-019-2(55)	2004	47	112

Note:
install rail parallel to roadway edge line. when taper is required by design engineer, a 50:1 taper over the length of system is allowable.

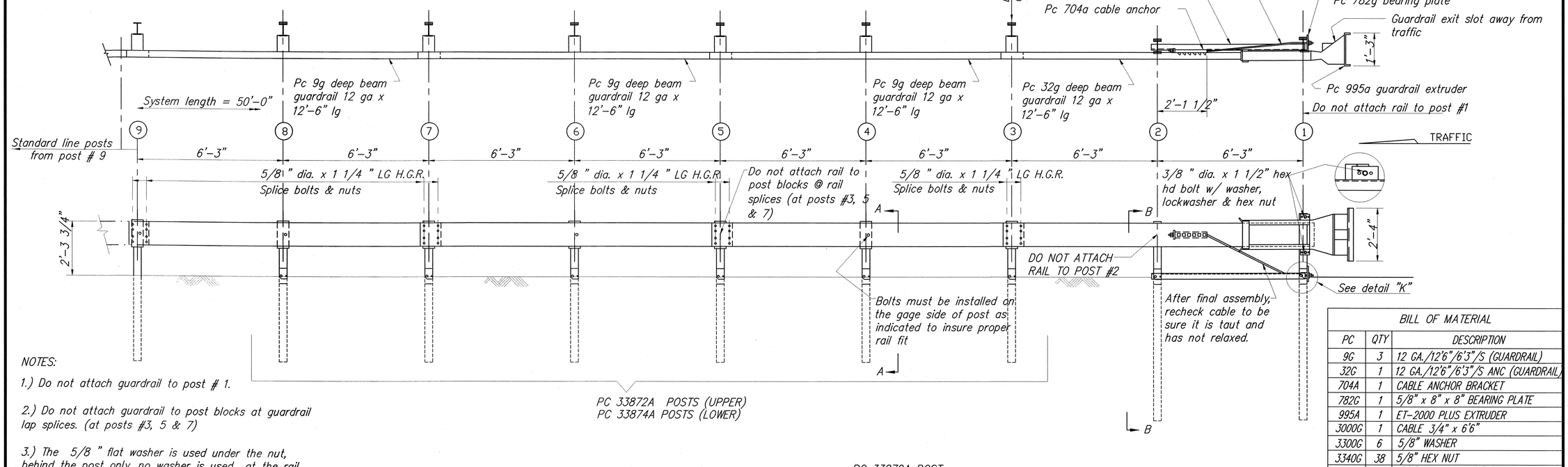

NOTES:

1.) Do not attach guardrail to post # 1.

2.) Do not attach guardrail to post blocks at guardrail lap splices. (at posts #3, 5 & 7)

3.) The 5/8 " flat washer is used under the nut, behind the post only. no washer is used at the rail.

4.) Manufacturer suggests customer to provide reflectorization of terminal.

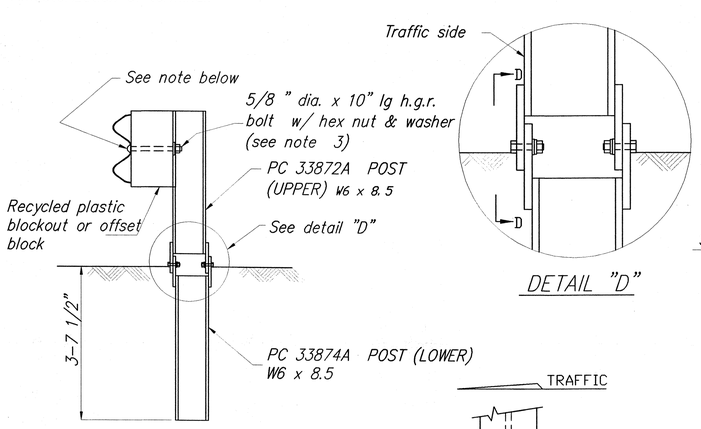

NOTE: Section "A-A" is similar @ post #3, 5 & 7. except rail is not attached.

SECTION "A-A"
(TYP @ POSTS #4, 6 & 8)

DETAIL "D"

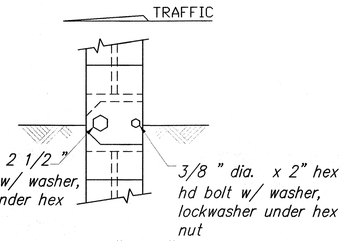

VIEW "D-D"

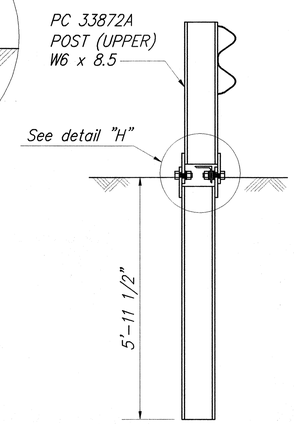

SECTION "B-B"
(POST #2)

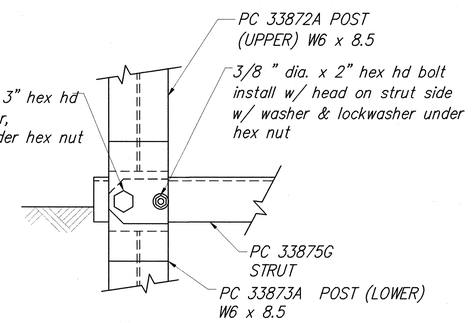

VIEW "H-H"

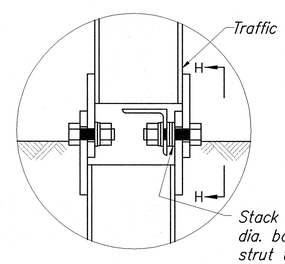

Stack 2-3 washers on 3/4 " dia. bolt between post pl & strut to allow strut to pass over 3/8 " dia. bolt head.

DETAIL "H"
(POST #2)

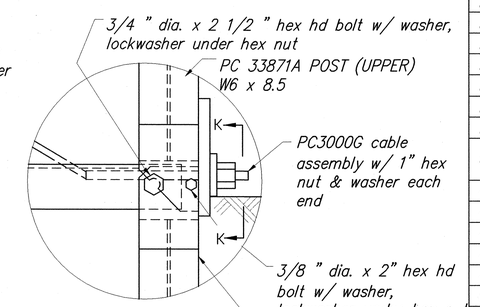

DETAIL "K"
(POST #1)

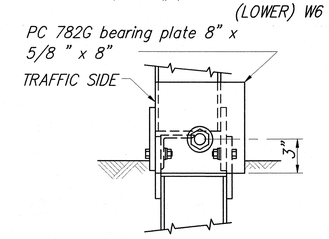

VIEW "K-K"

BILL OF MATERIAL

PC	QTY	DESCRIPTION
9G	3	12 GA./12'6"/6'3"/S (GUARDRAIL)
32G	1	12 GA./12'6"/6'3"/S ANC (GUARDRAIL)
704A	1	CABLE ANCHOR BRACKET
782G	1	5/8" x 8" x 8" BEARING PLATE
995A	1	ET-2000 PLUS EXTRUDER
3000G	1	CABLE 3/4" x 6'6"
3300G	6	5/8" WASHER
3340G	38	5/8" HEX NUT
3360G	32	5/8" dia. x 1 1/4" SPLICE BOLT
3500G	6	5/8" dia. x 10" POST BOLT
3701G	19	3/4" WASHER
3704G	16	3/4" HEX NUT
3717G	15	3/4" dia. x 2 1/2" HEX HD BOLT
3718G	1	3/4" dia. x 3" HEX HD BOLT
3900G	2	1" WASHER
3910G	2	1" HEX NUT
5326B	6	RECYCLED PLASTIC BLOCKOUT OR OFFSET BLOCK
4254G	18	3/8" WASHER
4255G	2	3/8" FENDER WASHERS
4258G	16	3/8" LOCKWASHER
4261G	2	3/8" dia. x 1 1/2" HEX HD BOLT
4699G	16	3/4" LOCKWASHER
6321G	16	3/8" dia. x 2" HEX HD BOLT
6405G	18	3/8" HEX NUT
33871A	1	ET2000 HBA POST #1 TOP
33872A	7	ET2000 HBA POST #2-#8 TOP
33873A	2	ET2000 HBA POST #1-#2 BOTTOM
33874A	6	ET2000 HBA POST #3-#8 BOTTOM
33875G	1	6'-6" ANGLE STRUT ET HBA

ORIGINAL PLAN			
NOTE BOOK	SURVEY PLOTTED BY		DATE
	DRAWN BY	G.W.	" "
	TRACED BY		" "
	DESIGNED BY	C. MCDONALD	" "
	QUANTITIES BY	C. MCDONALD	" "
No.	CHECKED BY	E. BIN	" "

STATE OF HAWAII
DEPARTMENT OF TRANSPORTATION
HIGHWAYS DIVISION

ET-2000 PLUS

HAWAII BELT ROAD RESURFACING
East Paauilo Bridge to Kaala Bridge
Federal Aid-Project No. NH-019-2(55)

Scale: As Noted Date: April 2004

SHEET No. C-45 OF 49 SHEETS

FED. ROAD DIST. NO.	STATE	FED. AID PROJ. NO.	FISCAL YEAR	SHEET NO.	TOTAL SHEETS
HAWAII	HAW.	NH-019-2(55)	2004	48	112

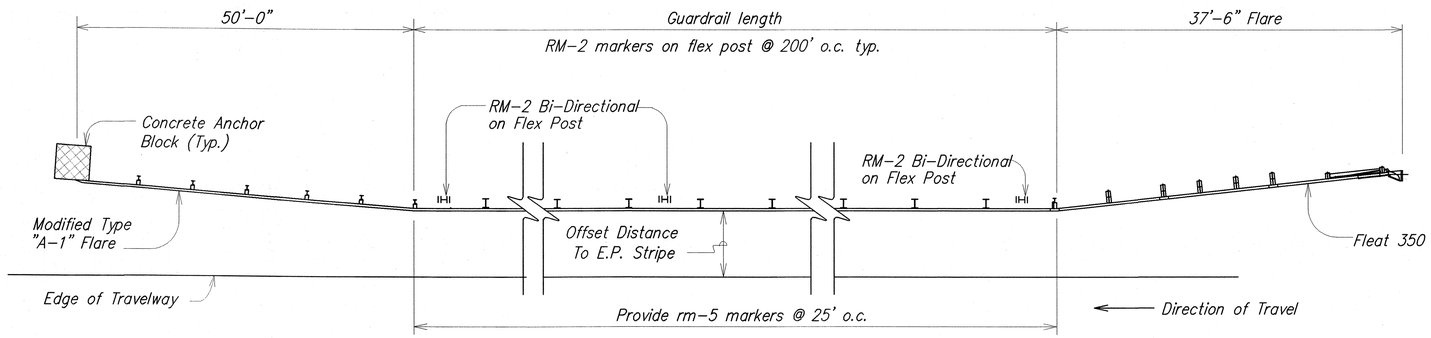

TYPICAL @ "MODIFIED A" & "FLEAT 350" END TREATMENT

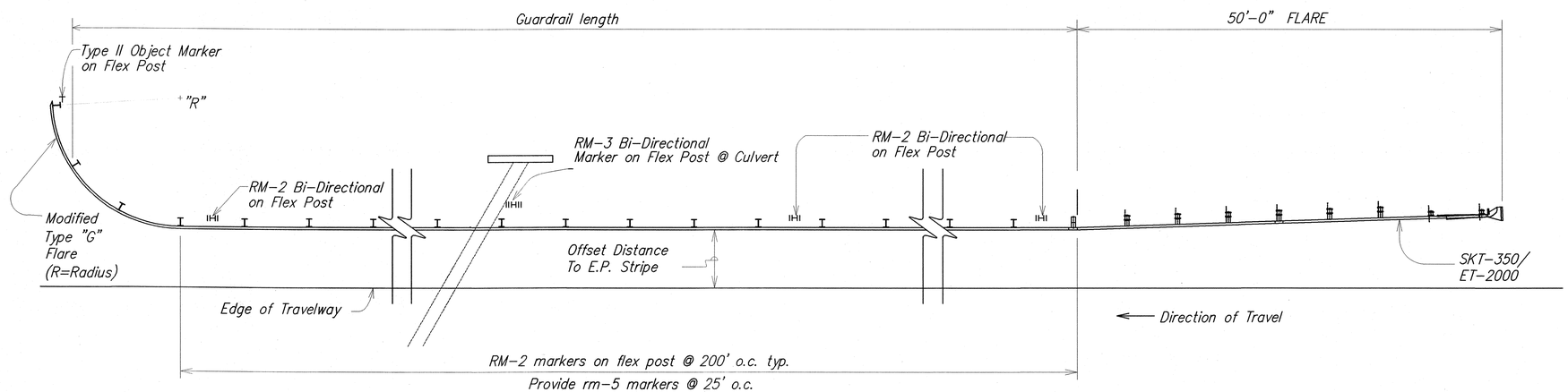

TYPICAL @ MODIFIED "G" & "SKT-350"/"ET-2000" END TREATMENT

NOTES:

1. All reflector markers located behind guardrail and other locations shall be installed with flexible delineator posts.
2. Exact location of Reflector Markers shall be determined in the field by the Engineer.
3. Color of flexible delineator posts shall be white except for RM-3, RM-3 bidirectional, and RM-3/RM-2 combinations shall be yellow posts.
4. RM-2 Bi- Directional shall be white in color.
5. RM-5 shall be per Standard Guardrail Details.

TYPICAL GUARDRAIL REFLECTOR MARKER INSTALLATION

Not To Scale

ORIGINAL PLAN	SURVEY PLOTTED BY	DATE
	DRAWN BY G.M.	" 4/04
NOTE BOOK	TRACED BY	" 4/04
	DESIGNED BY C. MORIMOTO	" 4/04
	QUANTITIES BY C. MORIMOTO	" 4/04
No.	CHECKED BY E. RIA	" 4/04

STATE OF HAWAII
DEPARTMENT OF TRANSPORTATION
HIGHWAYS DIVISION

GUARDRAIL REFLECTOR MARKER DETAIL

HAWAII BELT ROAD RESURFACING
East Paauilo Bridge to Kaala Bridge
Federal Aid-Project No. NH-019-2(55)

Scale: As Noted Date: April 2004

SHEET No. C-46 OF 49 SHEETS

T:\0895-13-C - Hawaii Belt Road Resurfacing\DWG\C46-RsMarkdet.dwg, 04/13/04 11:06:29 AM

FED. ROAD DIST. NO.	STATE	FED. AID PROJ. NO.	FISCAL YEAR	SHEET NO.	TOTAL SHEETS
HAWAII	HAW.	NH-019-2(55)	2004	49	112

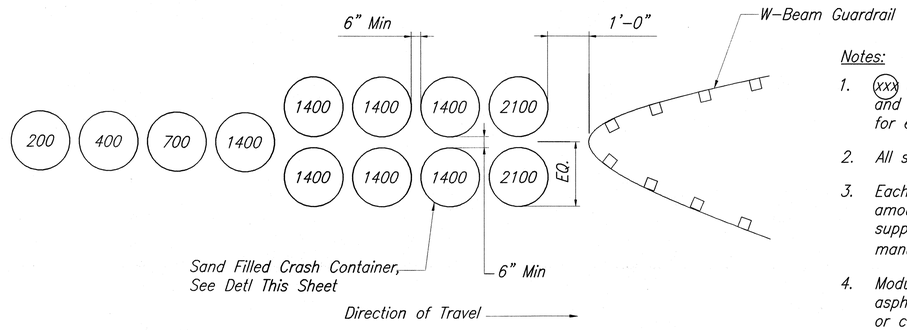

CRASH CUSHION ARRAY DETAIL
(Design Speed 50 MPH)
NCHRP 350 Compliant Attenuator Array
Not To Scale

Notes:

1. (xxx) indicates module location and weight of sand in pounds for each module.
2. All sand weights are nominal.
3. Each module is to contain amount of sand indicated, supported according to the manufacturer's instructions.
4. Modules shall be placed on asphalt concrete, epoxy mortar or concrete surface.
5. Weight of sand and outline of each module shall be painted on the surface of each module location.
6. Modules shall be Energy Absorption Systems Energite III or approved equivalent.

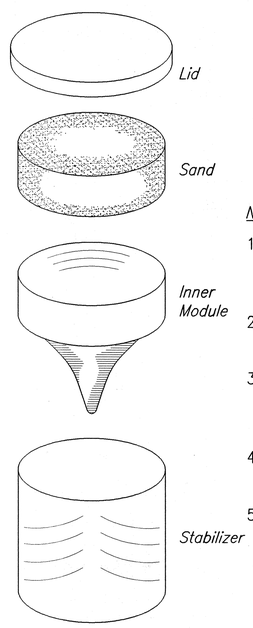

Notes:

1. Standard size of stabilizer: 36" diameter top, 32" diameter base with 35 3/4" height.
2. Standard weights of modules are 200, 400, 700, 1400 and 2100 pounds.
3. Design vehicle weights are 2250 pounds and 4500 pounds. (1021 kg and 2041 kg respectively)
4. Design initial impact speed is 45 m.p.h. (72.45 km/h)
5. Payment for relocations of temporary inertial barriers for the different construction phases shall be incidental to Contract Item No. 645.0200, Additional Traffic Control Devices.

SAND FILLED CRASH CONTAINER DETAIL
Not To Scale

ORIGINAL PLAN	SURVEY PLOTTED BY	DATE
	DRAWN BY E.M.	" 4/04
NOTE BOOK	TRACED BY	" 4/04
	DESIGNED BY C. MORIMOTO	" 4/04
	QUANTITIES BY C. MORIMOTO	" 4/04
No.	CHECKED BY E.M.	" 4/04

STATE OF HAWAII
DEPARTMENT OF TRANSPORTATION
HIGHWAYS DIVISION

INERTIAL BARRIER DETAILS

HAWAII BELT ROAD RESURFACING
East Paauilo Bridge to Kaala Bridge
Federal Aid-Project No. NH-019-2(55)

Scale: As Noted Date: April 2004

SHEET No. C-47 OF 49 SHEETS

T:\0895-13-C - Hawaii Belt Road Resurfacing\DWG\C47-SAND_BARRELS.dwg, 04/13/04 11:06:55 AM

FED. ROAD DIST. NO.	STATE	FED. AID PROJ. NO.	FISCAL YEAR	SHEET NO.	TOTAL SHEETS
HAWAII	HAW.	NH-019-2(55)	2004	50	112

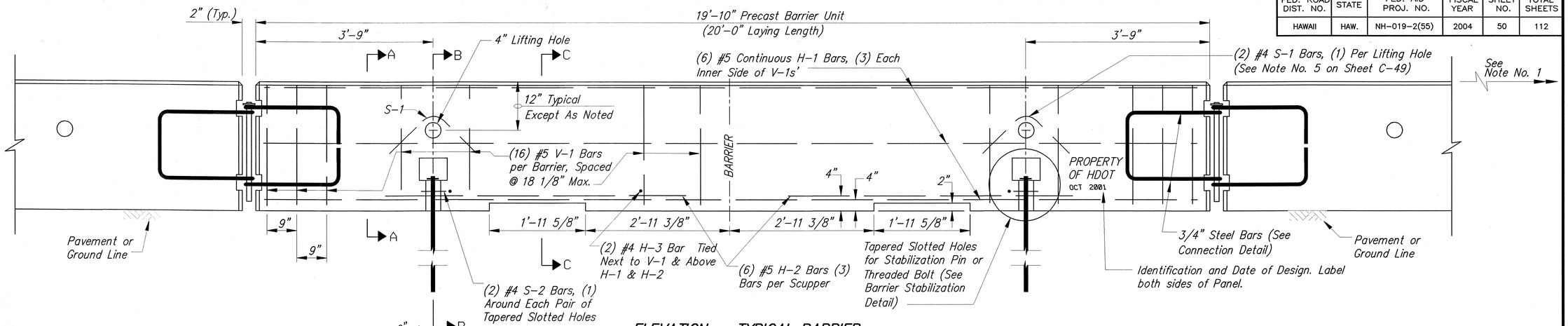

ELEVATION – TYPICAL BARRIER

MASS: 3.9 tons PER PANEL

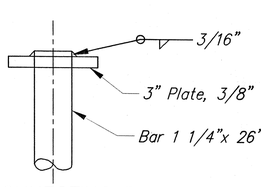

CONNECTING PIN
(See Note No. 5 on Sheet C-47)

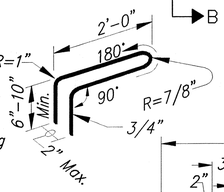

STEEL BAR

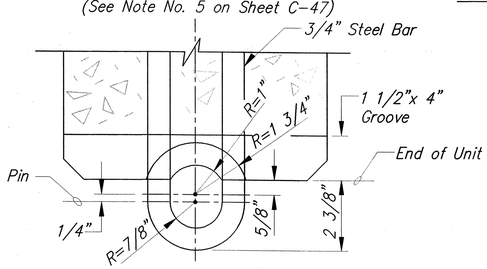

SECTION E-E

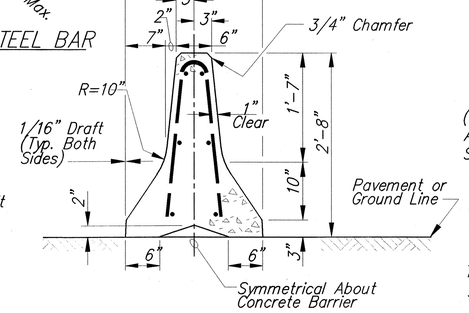

SECTION A-A

CONNECTION DETAILS

(See Note No. 5 on C-47)

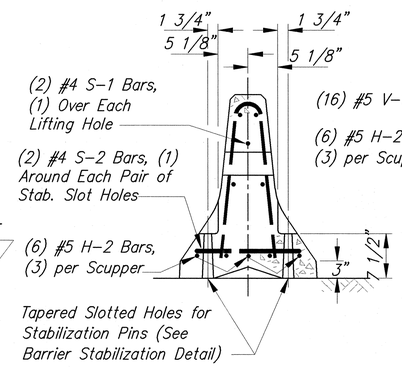

SECTION B-B

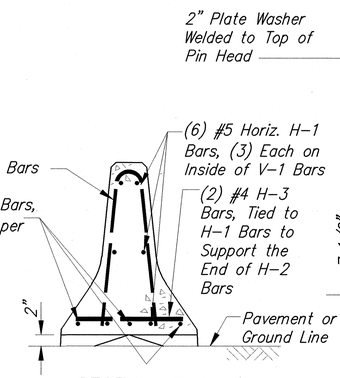

SECTION C-C

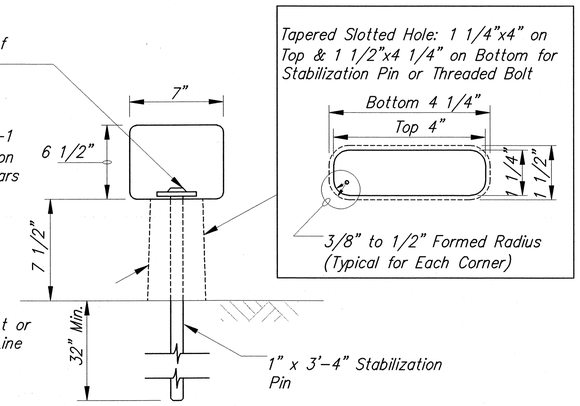

BARRIER STABILIZATION DETAIL

(See Note Nos. 3 & 4 on Sheet C-49)

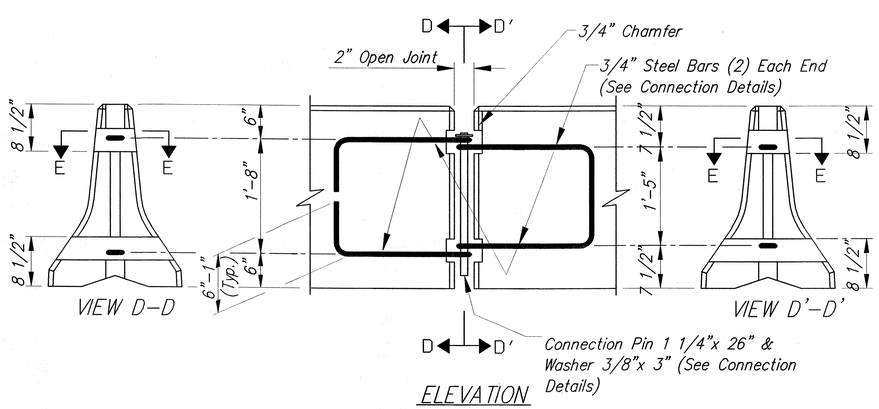

ELEVATION

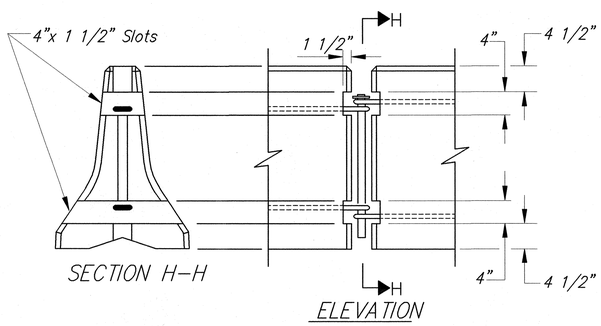

BARRIER REMOVAL SLOT DETAILS

ORIGINAL PLAN	SURVEY PLOTTED BY	DATE
	DRAWN BY G.M.	
NOTE BOOK	TRACED BY "	"
	DESIGNED BY C. WONG	"
	CHECKED BY C. WONG	"
No.	CHECKED BY E. MA	"

STATE OF HAWAII
DEPARTMENT OF TRANSPORTATION
HIGHWAYS DIVISION

PORTABLE CONCRETE BARRIER-1

HAWAII BELT ROAD RESURFACING
East Paauilo Bridge to Kaala Bridge
Federal Aid-Project No. NH-019-2(55)

Scale: As Noted Date: April 2004

SHEET No. **C-48** OF **49** SHEETS

T:\0886-13-C - Hawaii Belt Road Resurfacing\DWG\C48-PC_BARRIERS1.dwg, 04/13/04 11:07:21 AM

FED. ROAD DIST. NO.	STATE	FED. AID PROJ. NO.	FISCAL YEAR	SHEET NO.	TOTAL SHEETS
HAWAII	HAW.	NH-019-2(55)	2004	51	112

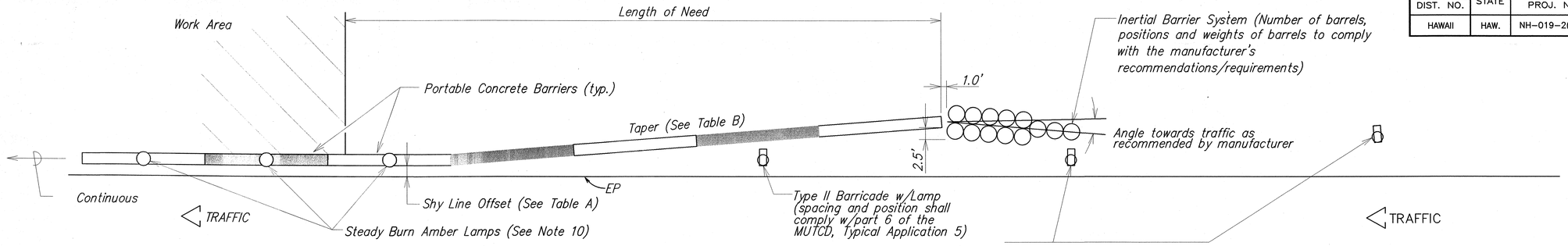

TYPICAL DETAIL – PORTABLE CONCRETE BARRIER END TREATMENT

Scale: 1" = 10'-0"

METAL REINFORCEMENT TABLE				
MARK	LOCATION	BAR SIZE	(NO. BARS)	SKETCH
H-1	Horizontal in Barrier Tied Inside V-1 Bars	#5	(6)	19'-3"
H-2	Centered Above Scuppers Long. & Transversely	#5	(6)	6'-6"
H-3	Tied Above H-1 Bars to Support H-2, Tied to V-1	#4	(2)	1'-6"
S-1	Horizontal in Top of Wing Wall & in Floor Back Wall	#4	(2)	2'-5" Lifting Hole 90^ R=3 3/8"
S-2	Horizontal Around Slots Between V-1's @ Scuppers	#4	(2)	R=1 1/2" Slots 5'-1" Bar w/(4) 1 1/2"R Bends & Min. 1'-0" Overlap 7" 1'-6" 1" Min. Clear. to Bar
V-1	Vertical in Barrier (3) Each End & (2) at Each Scupper	#5	(16)	Total Length 4'-9" R=2 3/16" 12° 9 1/2" 4 3/8" 2'-1 3/8"

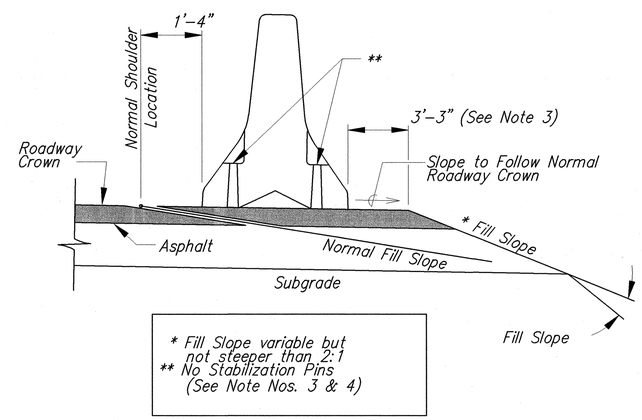

* Fill Slope variable but not steeper than 2:1
** No Stabilization Pins (See Note Nos. 3 & 4)

STANDARD INSTALLATION

(See Note No. 1)

TABLE A SHY LINE OFFSETS *	
DESIGN SPEED (mph)	SHY LINE OFFSETS
70	10.0'
65	9.0'
60	8.5'
55	7.0'
50	6.5'
45	6.0'
40	5.0'
35	4.5'
30	3.5'
≤ 25	2.0'

TABLE B MAXIMUM TAPERS FOR CONCRETE BARRIER		
DESIGN SPEED (mph)	TAPER	
	INSIDE SHY LINE	BEYOND SHY LINE
70	30:1	20:1
65	28:1	19:1
60	26:1	18:1
55	24:1	16:1
50	21:1	14:1
45	18:1	12:1
40	17:1	11:1
35	15:1	9:1
≤ 30	13:1	8:1

* Note: Minimum shy line offset for tangent sections shall be 2'-0".

REDUCED PLAN
(HALF SIZE)
0 1 2 3
3 INCHES OF ORIGINAL PLAN

NOTES:

1. For end treatment, layout, crash cushions and where needed see Project Plans or Special Provisions.
2. Barriers must be pinned together and cannot exceed the Table of Maximum Tapers.
3. The concrete barrier "Standard Installation" design allows for 3'-3" of outward lateral movement if the barrier is struck. Barrier installations that require less than the 3'-3" of outward lateral movement should have stabilization pins.
4. ASTM A-36 steel shall be used for the connection pin, connection loops and stabilization pins. A one piece pin with a 3" rounded top may be used in place of the detailed connection pin if the one piece pin meets ASTM A-36 requirements.
5. A 4" white PVC sleeve may be used to form the lifting hole and if used the sleeve is to be left in place.
6. Concrete shall be Class A and reinforcing shall be Grade 60.
7. Identification and date of design will be as follows:

   PROPERTY
   OF HDOT
   OCT 2004

   Text letters and numbers shall be shown as on Standard Plan Sht. No. B-01. "PROPERTY OF HDOT" may be changed depending upon ownership. All Portable Concrete Barriers made for HDOT will be subject to rejection, if "PROPERTY OF HDOT" is not imprinted. The Contractor shall bear the cost of the rejected Portable Concrete Barriers.
8. Minimum tangent length for portable Concrete Barrier System shall be 100' (5 units). This minimum does not include the required system length of the Inertial Barrier System.
9. Install steady burn amber lamps on portable concrete barriers @ 20.0' o.c. Installing, maintaining and removing each steady burn amber lamp including changing of batteries and bulbs shall be considered incidental to applicable portable concrete barrier items.

ORIGINAL PLAN	SURVEY PLOTTED BY	DATE
	DRAWN BY E.M.	"
NOTE BOOK	TRACED BY	"
	DESIGNED BY C. MORIMOTO	"
	QUANTITIES BY C. MORIMOTO	"
No.	CHECKED BY E.M.	"

STATE OF HAWAII
DEPARTMENT OF TRANSPORTATION
HIGHWAYS DIVISION

PORTABLE CONCRETE BARRIER-2

HAWAII BELT ROAD RESURFACING
East Paauilo Bridge to Kaala Bridge
Federal Aid-Project No. NH-019-2(55)

Scale: As Noted Date: April 2004

T:\0895-13-C - Hawaii Belt Road Resurfacing\DWG\C49-PC_BARRIERS2.dwg, 04/13/04 11:07:48 AM