FED. ROAD DIST. NO.	STATE	FEDERAL AID PROJ. NO.	FISCAL YEAR	SHEET NO.	TOTAL SHEETS
HAWAII	HAWAII	19FGH-03-04M	2004	S2.1	32

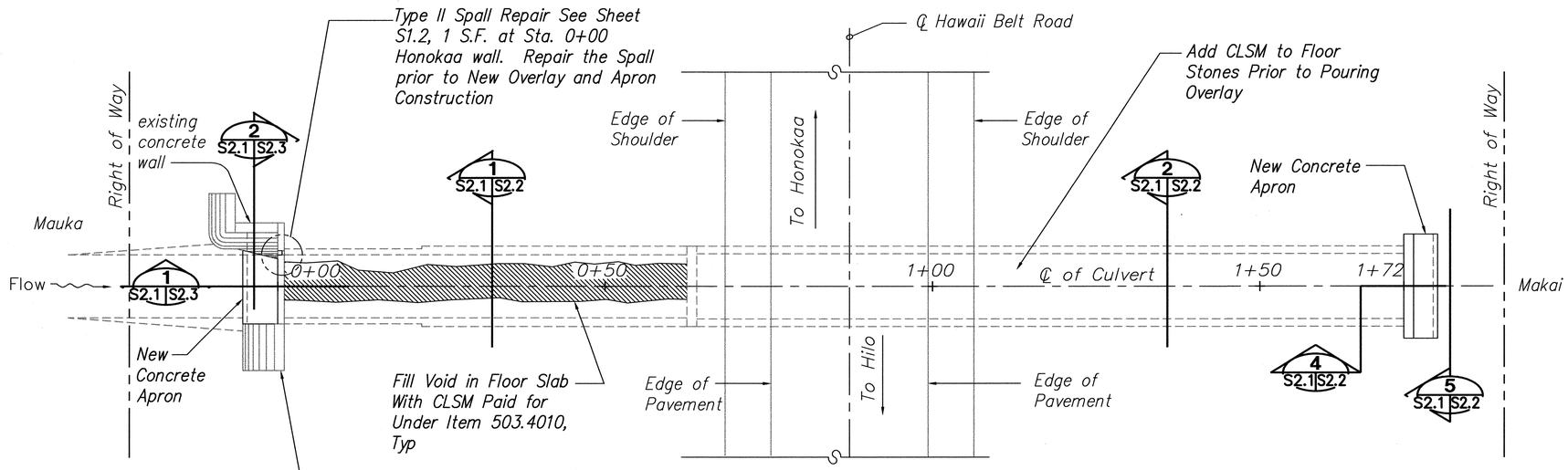

LAYOUT PLAN

Scale: 1" = 10'-0"

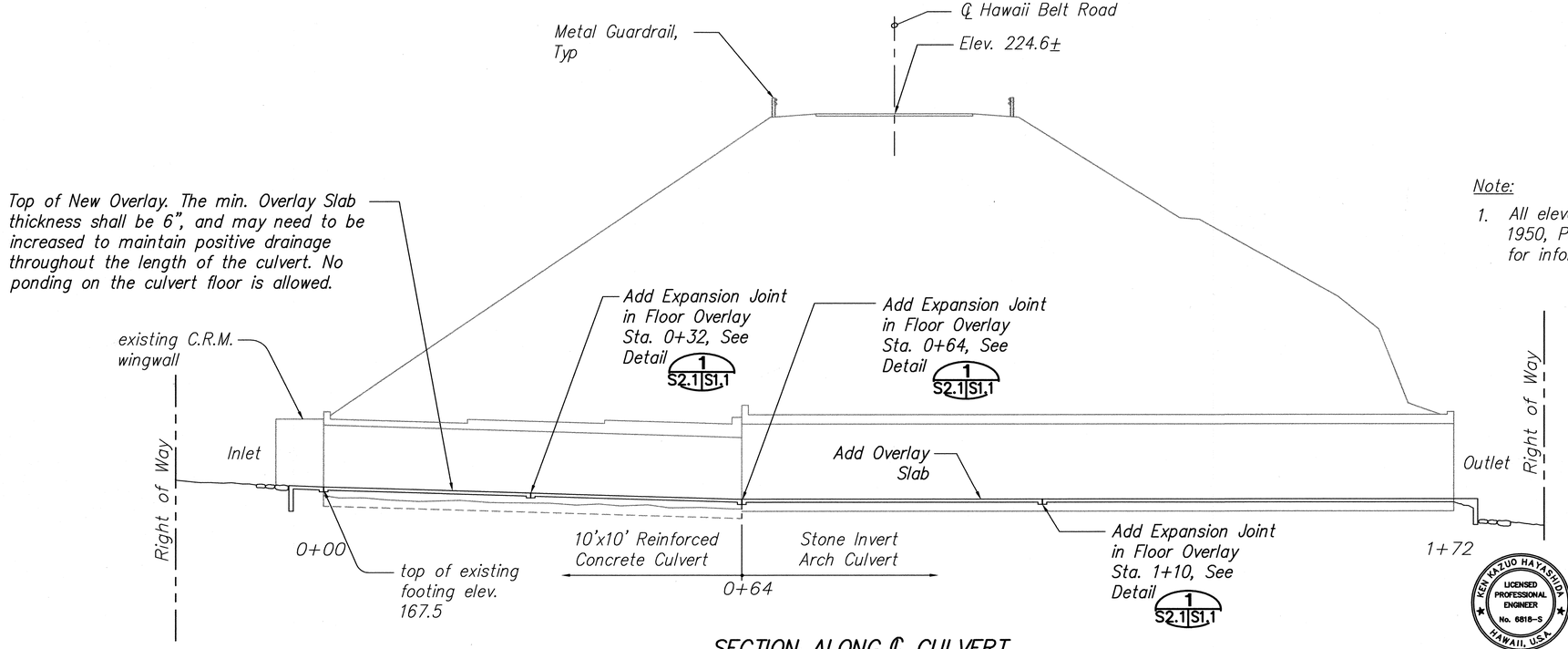

SECTION ALONG ℄ CULVERT

Scale: 1" = 10'-0"

Note:

1. All elevations are taken from plans, dated July 1950, Project No, SDR-3(14), and are included for informational purposes only.

ORIGINAL PLAN	SURVEY PLOTTED BY	DATE
	DRAWN BY	
	TRACED BY	
NOTE BOOK	DESIGNED BY	
	QUANTITIES BY	
No.	CHECKED BY	

0' 10' 20' 30'
1" = 10'

KEN KAZUO HAYASHIDA
LICENSED PROFESSIONAL ENGINEER
No. 6818-S
HAWAII, U.S.A.

EXPIRATION DATE OF THE LICENSE 4/30/2006
THIS WORK WAS PREPARED BY ME OR UNDER MY SUPERVISION

STATE OF HAWAII
DEPARTMENT OF TRANSPORTATION
HIGHWAYS DIVISION

M.P. 18.61

PLAN AND PROFILE

HAWAII BELT ROAD DRAINAGE IMPROVEMENTS

Project No. 19FGH-03-04M

Scale: As Noted Date: April 30, 2004

SHEET No. S2.1 OF 32 SHEETS

P:\Drafting\2004-05-07_1074-01 hagaland culverts\S2.1.MP18.61.dwg, 5/7/2004 9:23:46 AM, 1:1.20

FED. ROAD DIST. NO.	STATE	FEDERAL AID PROJ. NO.	FISCAL YEAR	SHEET NO.	TOTAL SHEETS
HAWAII	HAWAII	19FGH-03-04M	2004	S2.2	32

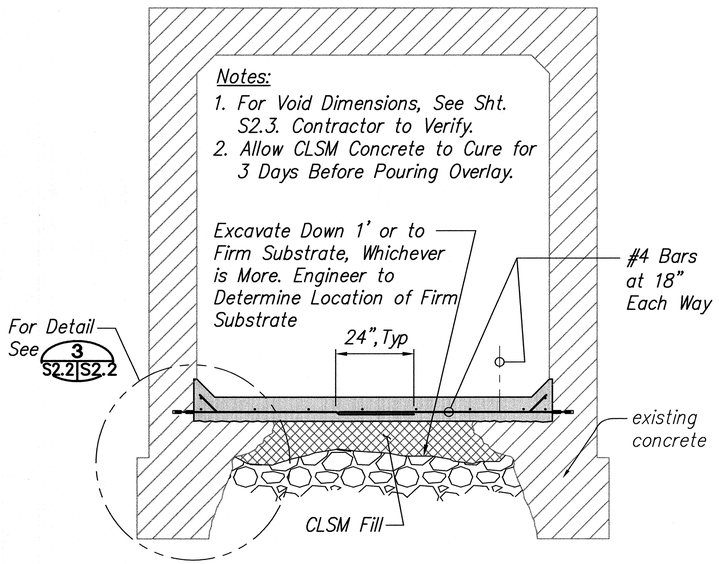

SECTION 1 S2.1 S2.2

Scale: 1/2" = 1'-0"

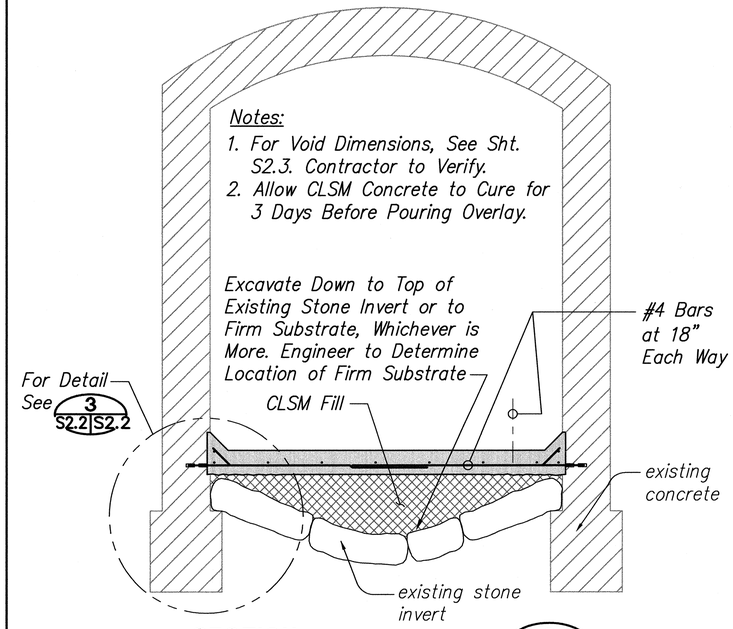

SECTION 2 S2.1 S2.2

Scale: 1/2" = 1'-0"

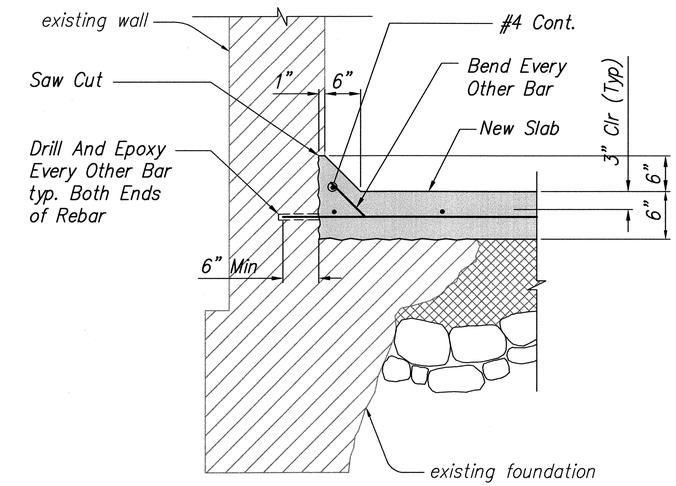

SECTION 3 S2.2 S2.2

Scale: 1" = 1'-0"

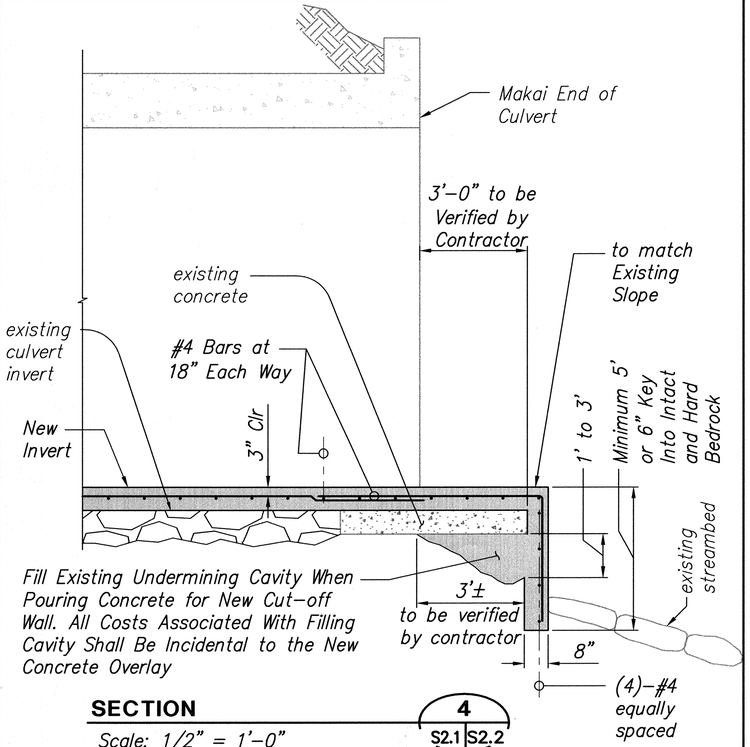

SECTION 4 S2.1 S2.2

Scale: 1/2" = 1'-0"

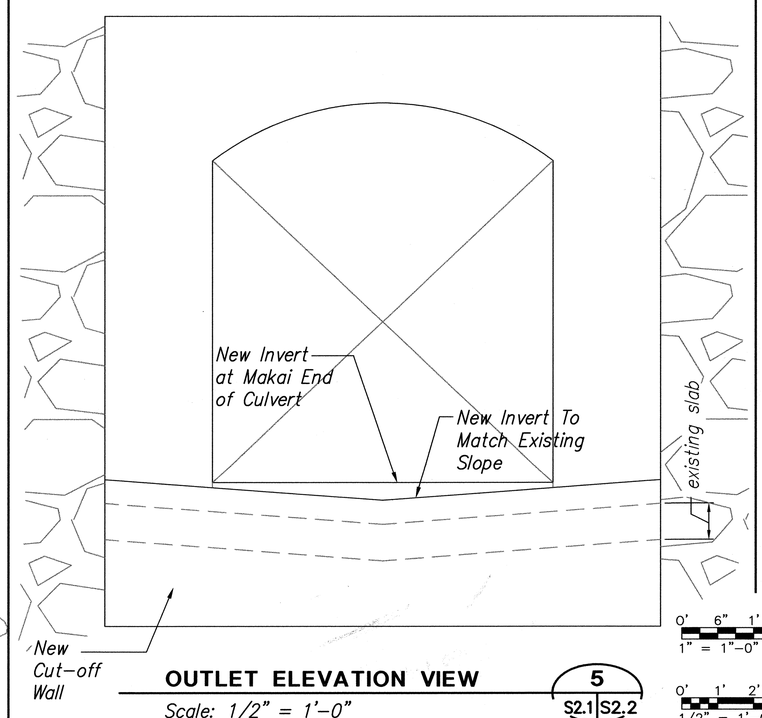

OUTLET ELEVATION VIEW 5 S2.1 S2.2

Scale: 1/2" = 1'-0"

0' 6" 1' 2' 3'
1" = 1"-0"

0' 1' 2' 3' 4' 5' 6'
1/2" = 1'-0"

KEN KAZUO HAYASHIDA
LICENSED PROFESSIONAL ENGINEER
No. 6818-S
HAWAII, U.S.A.

EXPIRATION DATE OF THE LICENSE 4/30/2006
THIS WORK WAS PREPARED BY ME OR UNDER MY SUPERVISION

STATE OF HAWAII
DEPARTMENT OF TRANSPORTATION
HIGHWAYS DIVISION

M.P. 18.61 CULVERT

SECTIONS AND DETAILS

HAWAII BELT ROAD DRAINAGE IMPROVEMENTS

Project No. 19FGH-03-04M

Scale: As Noted Date: April 30, 2004

SHEET No. S2.2 OF 32 SHEETS

ORIGINAL PLAN	SURVEY PLOTTED BY	DATE
	DRAWN BY	
NOTE BOOK	TRACED BY	
	DESIGNED BY	
	QUANTITIES BY	
No.	CHECKED BY	

FED. ROAD DIST. NO.	STATE	FEDERAL AID PROJ. NO.	FISCAL YEAR	SHEET NO.	TOTAL SHEETS
HAWAII	HAWAII	19FGH-03-04M	2004	S2.3	32

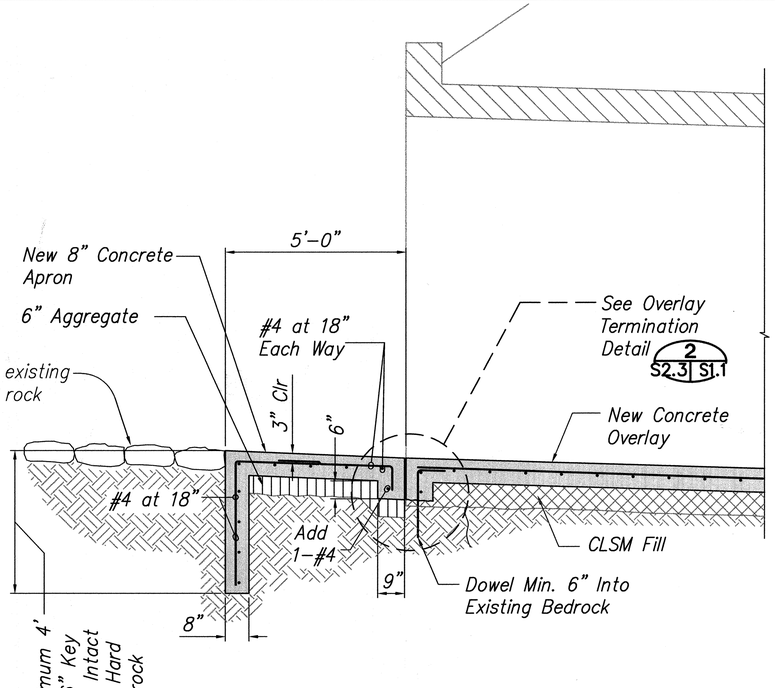

SECTION 1 S2.1 S2.3

Scale: 1/2" = 1'-0"

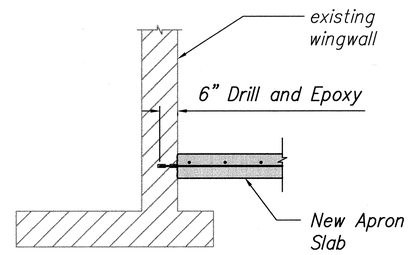

SECTION 2 S2.1 S2.3

Scale: 1/2" = 1'-0"

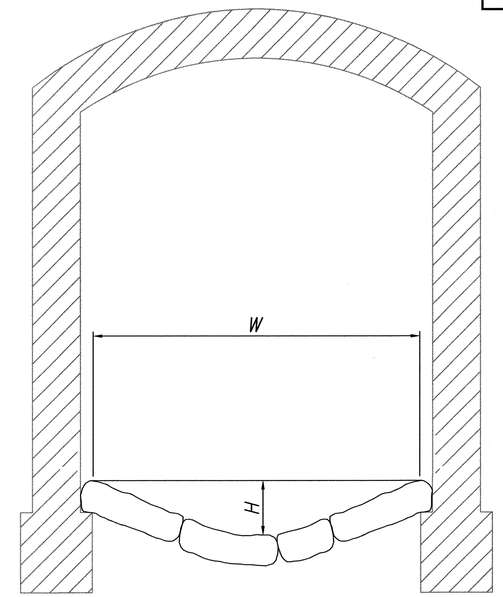

STA. 0+65 TO 1+60

STATION	H (AVG) in	W ft
0+65	16	9.83
0+70	12	9.83
0+75	12	9.83
0+80	10	9.83
0+85	10	9.83
0+90	10	9.83
0+95	24	8
1+00	30	5.5
1+05	24	6.5
1+10	24	5.5
1+15	30	6
1+20	24	7
1+25	36	8.5
1+30	36	8.5
1+35	24	7
1+40	24	6.5
1+45	20	7
1+50	20	7.5
1+55	24	7.67
1+60	24	7.67

SLAB VOID DIMENSIONS

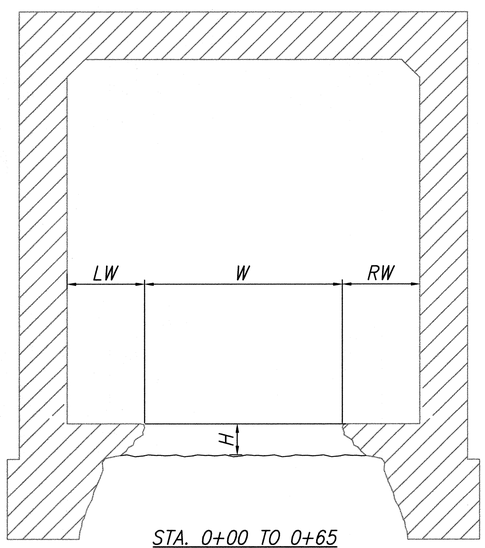

STA. 0+00 TO 0+65

STATION	H (AVG) in	W ft	LW in	RW in
0+00	24	5.5	27	22
0+05	24	6	27	17
0+10	17	6.5	23	13
0+15	18	6.5	30	12
0+20	12	6	27	18
0+25	20	7	19	13
0+30	16	6.67	24	13
0+35	14	6.67	25	13
0+40	17	7	18	16
0+45	24	6.5	24	20
0+50	24	6.5	20	19
0+55	16	8.5	3.5	16
0+60	14	8.5	3.5	14

SLAB VOID DIMENSIONS

ORIGINAL PLAN | SURVEY PLOTTED BY | DRAWN BY | TRACED BY | DESIGNED BY | QUANTITIES BY | CHECKED BY | DATE | NOTE BOOK | No.

0' 6" 1' 2' 3'
1" = 1"-0"

0' 1' 2' 3' 4' 5' 6'
1/2" = 1'-0"

KEN MAZUO HAYASHIDA
LICENSED PROFESSIONAL ENGINEER
No. 6818-S
HAWAII, U.S.A.

EXPIRATION DATE OF THE LICENSE 4/30/2006
THIS WORK WAS PREPARED BY ME OR UNDER MY SUPERVISION

STATE OF HAWAII
DEPARTMENT OF TRANSPORTATION
HIGHWAYS DIVISION

M.P. 18.61 CULVERT
INLET SECTIONS AND DETAILS

HAWAII BELT ROAD DRAINAGE IMPROVEMENTS

Project No. 19FGH-03-04M

Scale: As Noted Date: April 30, 2004

SHEET No. S2.3 OF 32 SHEETS

F:\Drafting\2004-05-07_\074-01 highland culverts\S2.3-MP 18.61.dwg, 5/7/2004 9:24:37 AM, 1:24

FED. ROAD DIST. NO.	STATE	FEDERAL AID PROJ. NO.	FISCAL YEAR	SHEET NO.	TOTAL SHEETS
HAWAII	HAWAII	19FGH-03-04M	2004	S3.1	32

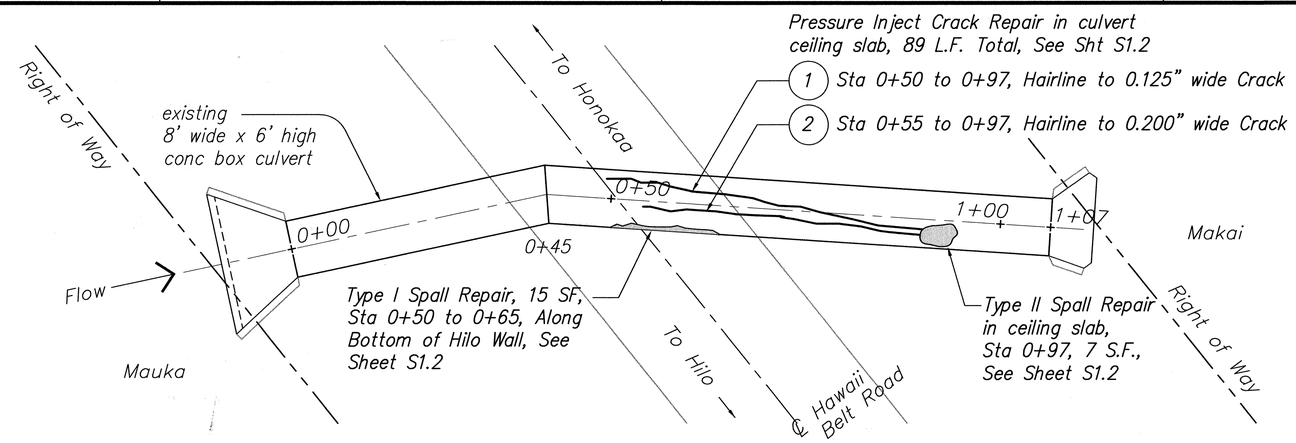

CULVERT CEILING LAYOUT PLAN

Scale: 1" = 10'-0"

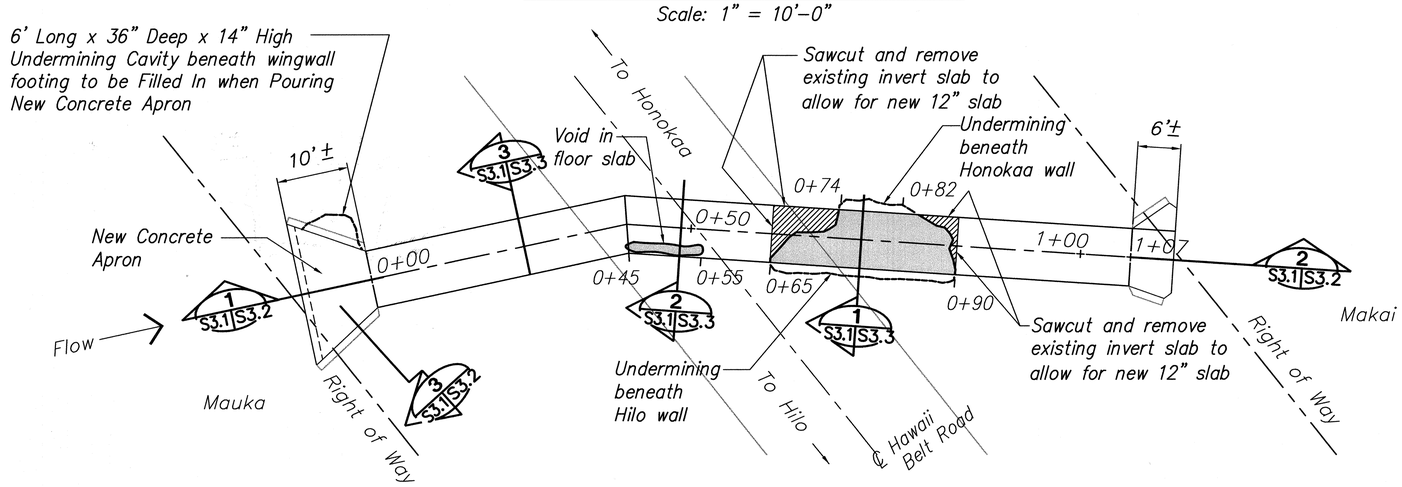

CULVERT FLOOR LAYOUT PLAN

Scale: 1" = 10'-0"

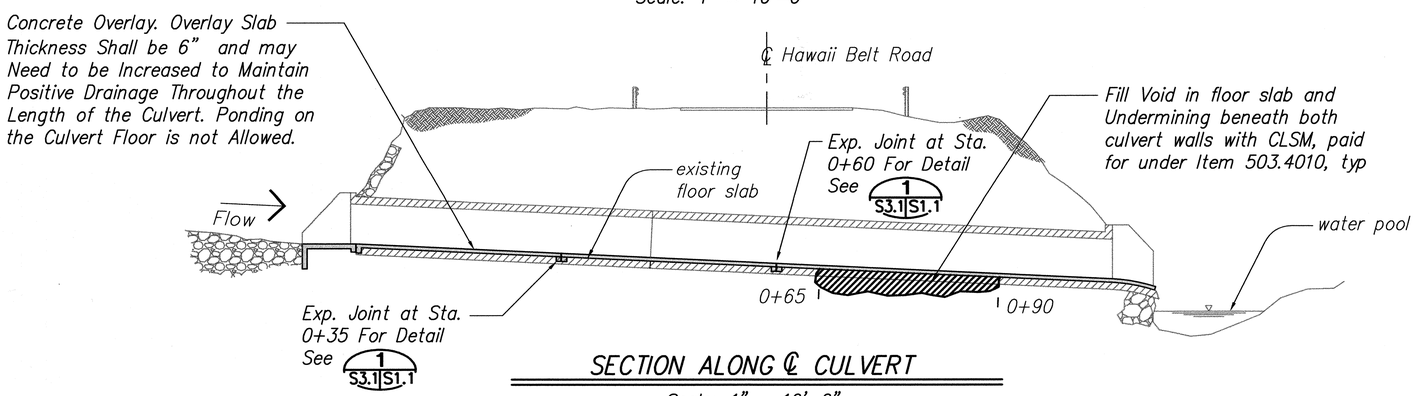

SECTION ALONG ℄ CULVERT

Scale: 1" = 10'-0"

ORIGINAL PLAN	SURVEY PLOTTED BY	DATE
	DRAWN BY	
NOTE BOOK	TRACED BY	
	DESIGNED BY	
	QUANTITIES BY	
No.	CHECKED BY	

KEN KAZUO HAYASHIDA
LICENSED PROFESSIONAL ENGINEER
No. 6818-S
HAWAII, U.S.A.

EXPIRATION DATE OF THE LICENSE: 4/30/2006
THIS WORK WAS PREPARED BY ME OR UNDER MY SUPERVISION

STATE OF HAWAII
DEPARTMENT OF TRANSPORTATION
HIGHWAYS DIVISION

M.P. 20.52

PLAN AND PROFILE

HAWAII BELT ROAD DRAINAGE IMPROVEMENTS

Project No. 19FGH-03-04M

Scale: As Noted Date: April 30, 2004

SHEET No. S3.1 OF 32 SHEETS

F:\Dwfing\2004-05-07_1074.01 beginend culverts\S3.1-MP20.52.dwg, 5/7/2004 8:23:52 AM, 1:1 20

FED. ROAD DIST. NO.	STATE	FEDERAL AID PROJ. NO.	FISCAL YEAR	SHEET NO.	TOTAL SHEETS
HAWAII	HAWAII	19FGH-03-04M	2004	S3.2	32

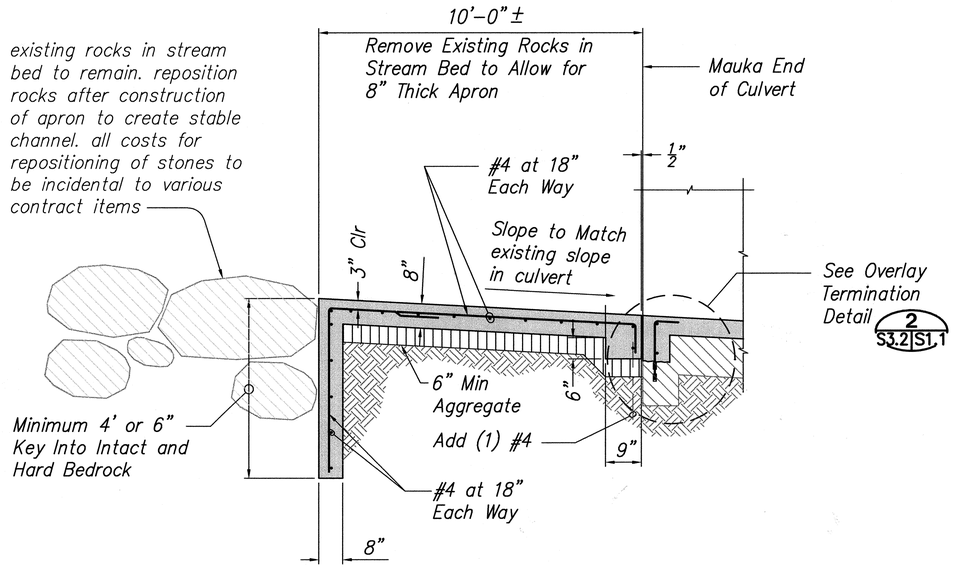

SECTION 1 S3.1 S3.2

Scale: 1/2" = 1'-0"

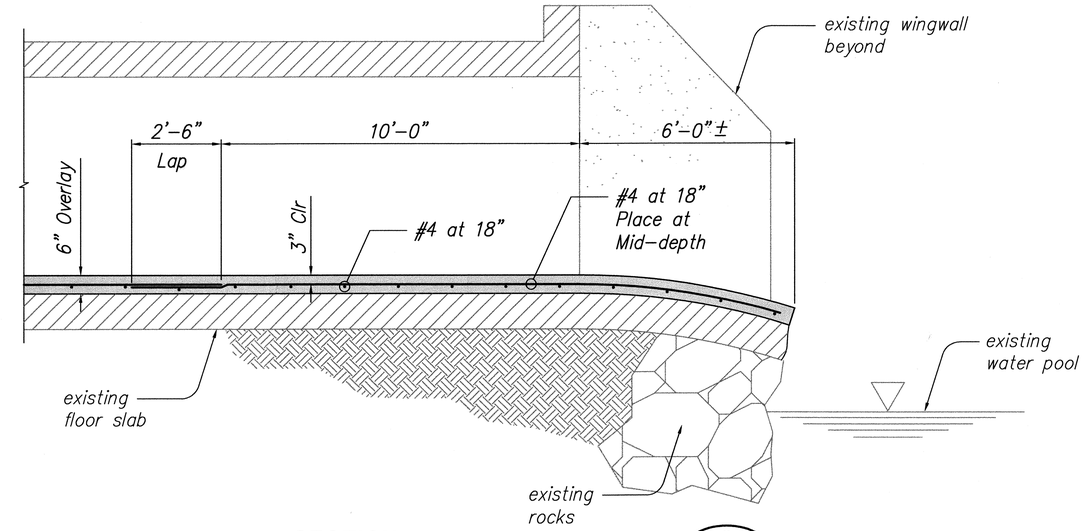

SECTION 2 S3.1 S3.2

Scale: 1/2" = 1'-0"

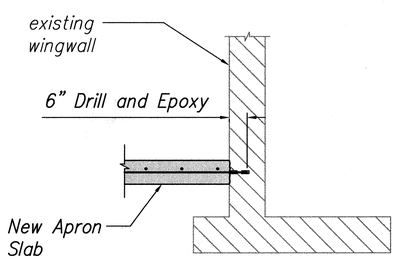

SECTION 3 S3.1 S3.2

Scale: 1/2" = 1'-0"

ORIGINAL PLAN	SURVEY PLOTTED BY	DATE
	DRAWN BY	
NOTE BOOK	TRACED BY	
	DESIGNED BY	
	QUANTITIES BY	
No.	CHECKED BY	

0' 1' 2' 3' 4' 5' 6'
1/2" = 1'-0"

KEN KAZUO HAYASHIDA LICENSED PROFESSIONAL ENGINEER No. 6818-S HAWAII, U.S.A.

EXPIRATION DATE OF THE LICENSE 4/30/2006
THIS WORK WAS PREPARED BY ME OR UNDER MY SUPERVISION

STATE OF HAWAII
DEPARTMENT OF TRANSPORTATION
HIGHWAYS DIVISION

M.P. 20.52 CULVERT
SECTIONS AND DETAILS

HAWAII BELT ROAD DRAINAGE IMPROVEMENTS

Project No. 19FGH-03-04M

Scale: As Noted Date: April 30, 2004

SHEET No. S3.2 OF 32 SHEETS

F:\Drafting\2004-05-07_1074.01 Inspiland culverts\S3.2.MP20.52.dwg, 5/7/2004 8:32:49 AM, 1:24

FED. ROAD DIST. NO.	STATE	FEDERAL AID PROJ. NO.	FISCAL YEAR	SHEET NO.	TOTAL SHEETS
HAWAII	HAWAII	19FGH-03-04M	2004	S3.3	32

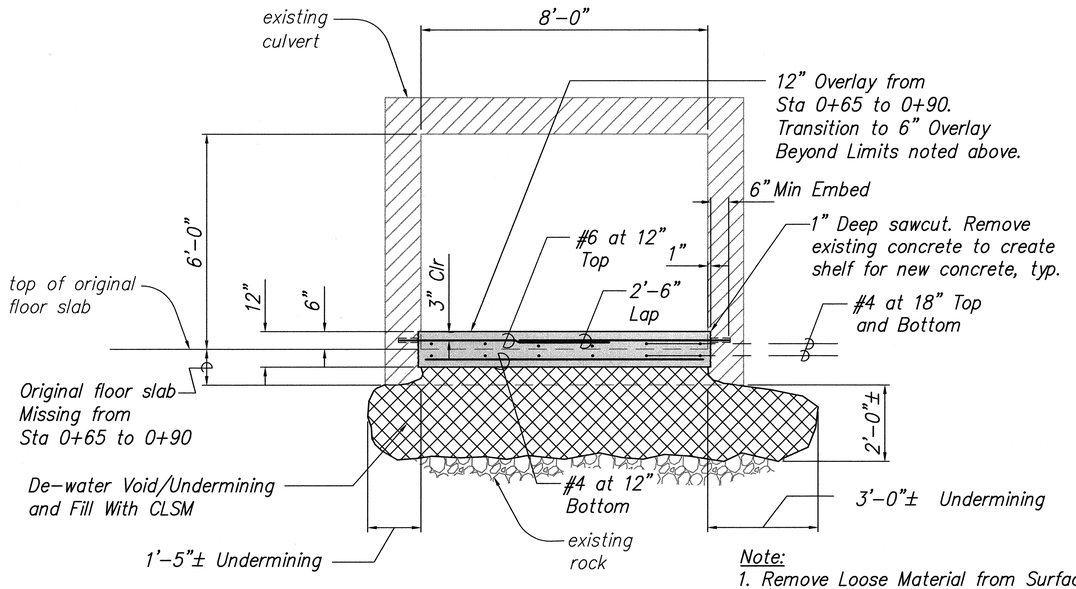

Note:
1. Remove Loose Material from Surface of Existing Rock Prior to Pouring CLSM. Paid From Item 206.4100.
2. Allow CLSM to Cure for 3 Days Before Pouring Overlay.

SECTION (Sta 0+65 to 0+90) 1 S3.1 S3.3

Scale: 1/2" = 1'-0"

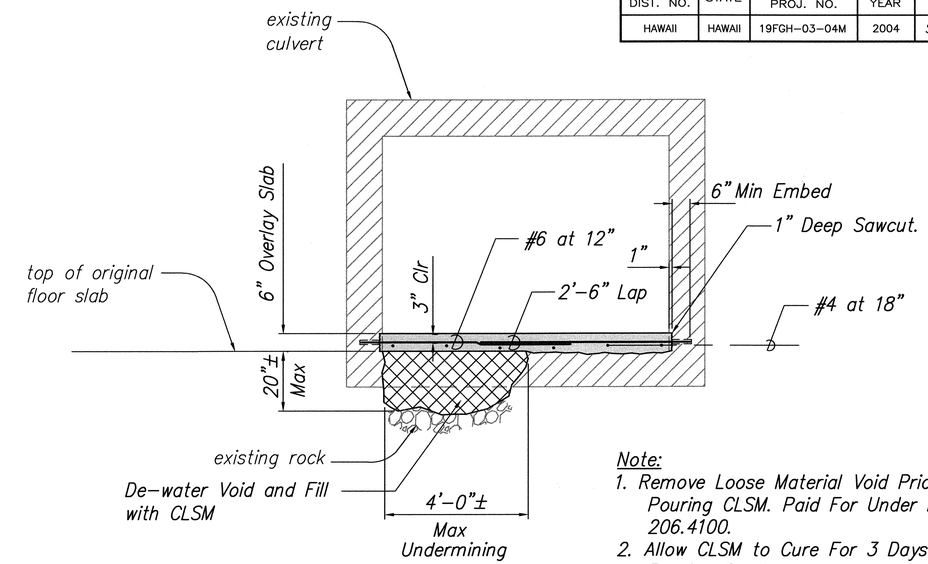

Note:
1. Remove Loose Material Void Prior to Pouring CLSM. Paid For Under Item 206.4100.
2. Allow CLSM to Cure For 3 Days Before Pouring Overlay.

SECTION (Sta 0+45 to 0+55) 2 S3.1 S3.3

Scale: 1/2" = 1'-0"

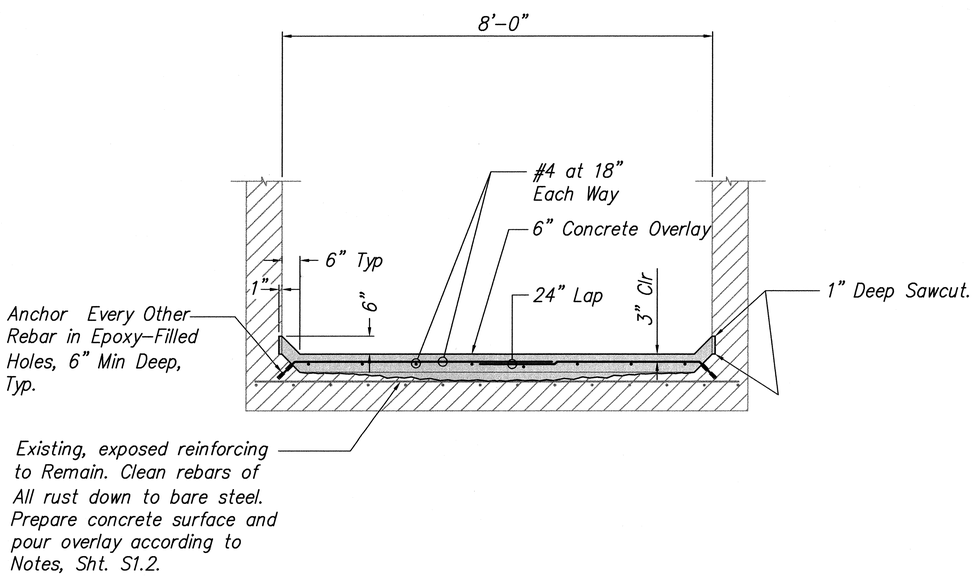

TYPICAL CONCRETE OVERLAY SECTION 3 S3.1 S3.3

Scale: 1/2" = 1'-0"

ORIGINAL PLAN	SURVEY PLOTTED BY	DATE
	DRAWN BY	
NOTE BOOK	TRACED BY	
	DESIGNED BY	
	QUANTITIES BY	
No.	CHECKED BY	

P:\Drafting\2004-05-07_1074.01 highland culverts\S3.3.MF20.S2.dwg, 5/7/2004 8:21:30 AM, 1:24

0' 1' 2' 3' 4' 5' 6'
1/2" = 1'-0"

KEN KAZUO HAYASHIDA LICENSED PROFESSIONAL ENGINEER No. 6818-S HAWAII, U.S.A.

EXPIRATION DATE OF THE LICENSE 4/30/2006
THIS WORK WAS PREPARED BY ME OR UNDER MY SUPERVISION

STATE OF HAWAII
DEPARTMENT OF TRANSPORTATION
HIGHWAYS DIVISION

M.P. 20.52 CULVERT

SECTIONS AND DETAILS

HAWAII BELT ROAD DRAINAGE IMPROVEMENTS

Project No. 19FGH-03-04M

Scale: As Noted Date: April 30, 2004

SHEET No. S3.3 OF 32 SHEETS

FED. ROAD DIST. NO.	STATE	FEDERAL AID PROJ. NO.	FISCAL YEAR	SHEET NO.	TOTAL SHEETS
HAWAII	HAWAII	19FGH-03-04M	2004	S4.1	32

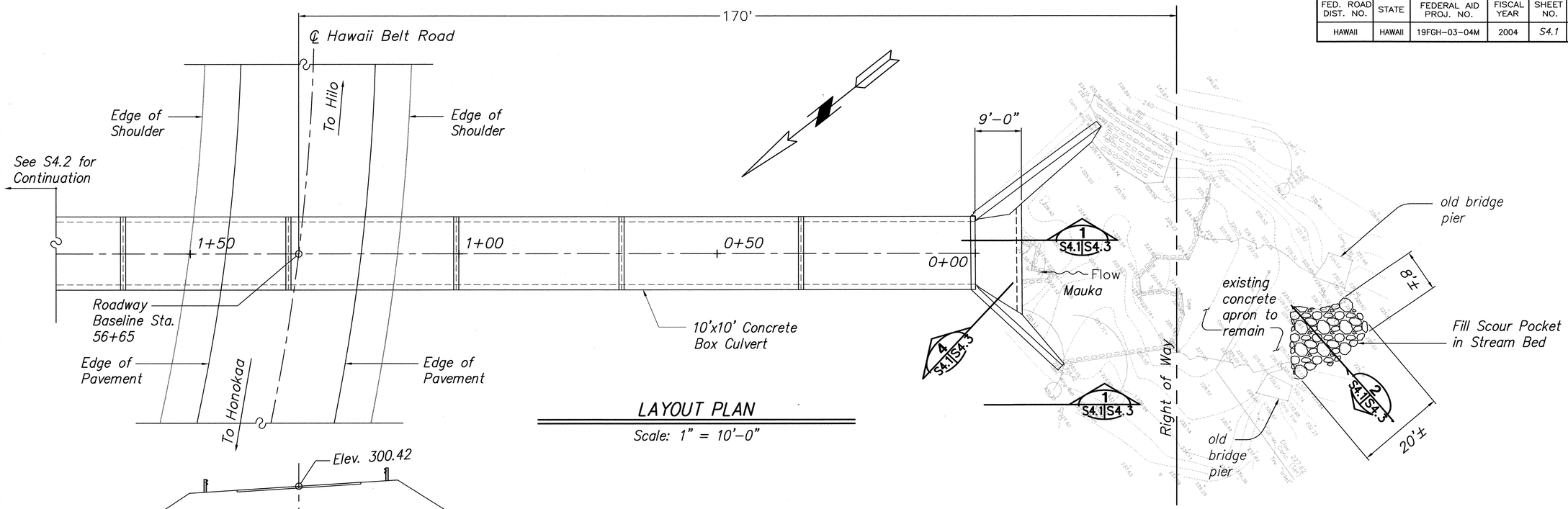

LAYOUT PLAN

Scale: 1" = 10'-0"

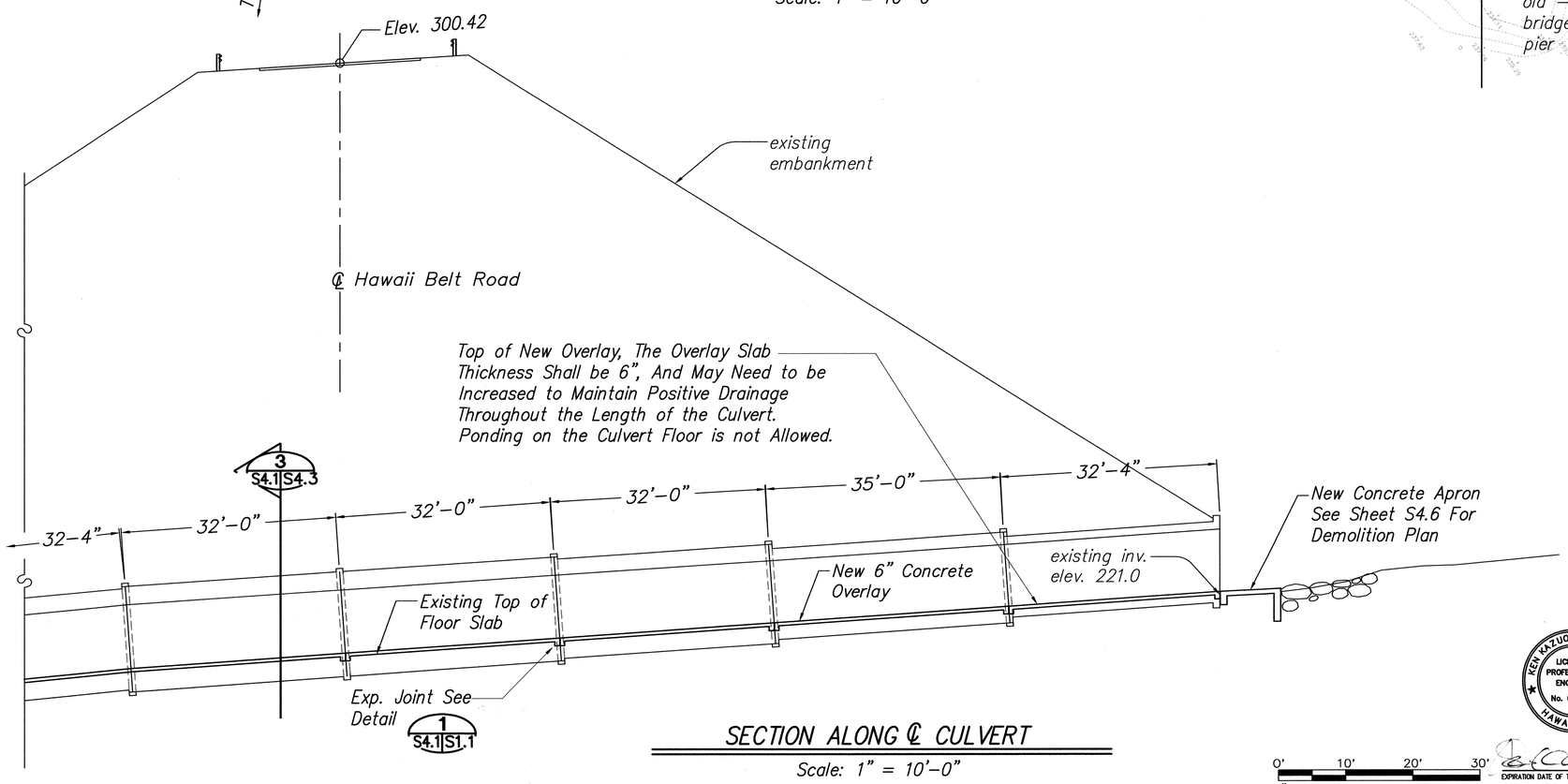

SECTION ALONG ℄ CULVERT

Scale: 1" = 10'-0"

Notes:
1. Elevations show are taken from plans dated November, 1951, Project No. SDR-3(17).

		DATE
ORIGINAL PLAN	SURVEY PLOTTED BY	
	DRAWN BY	
NOTE BOOK	TRACED BY	
	DESIGNED BY	
	QUANTITIES BY	
No.	CHECKED BY	

KEN KAZUO HAYASHIDA
LICENSED PROFESSIONAL ENGINEER
No. 6818-S
HAWAII, U.S.A.

0' 10' 20' 30'
1" = 10'

EXPIRATION DATE OF THE LICENSE-4/30/2006
THIS WORK WAS PREPARED BY ME OR UNDER MY SUPERVISION

STATE OF HAWAII
DEPARTMENT OF TRANSPORTATION
HIGHWAYS DIVISION

M.P. 26.49

PLAN AND PROFILE

HAWAII BELT ROAD DRAINAGE IMPROVEMENTS

Project No. 19FGH-03-04M

Scale: As Noted Date: April 30, 2004

SHEET No. S4.1 OF 32 SHEETS

FED. ROAD DIST. NO.	STATE	FEDERAL AID PROJ. NO.	FISCAL YEAR	SHEET NO.	TOTAL SHEETS
HAWAII	HAWAII	19FGH-03-04M	2004	S4.2	32

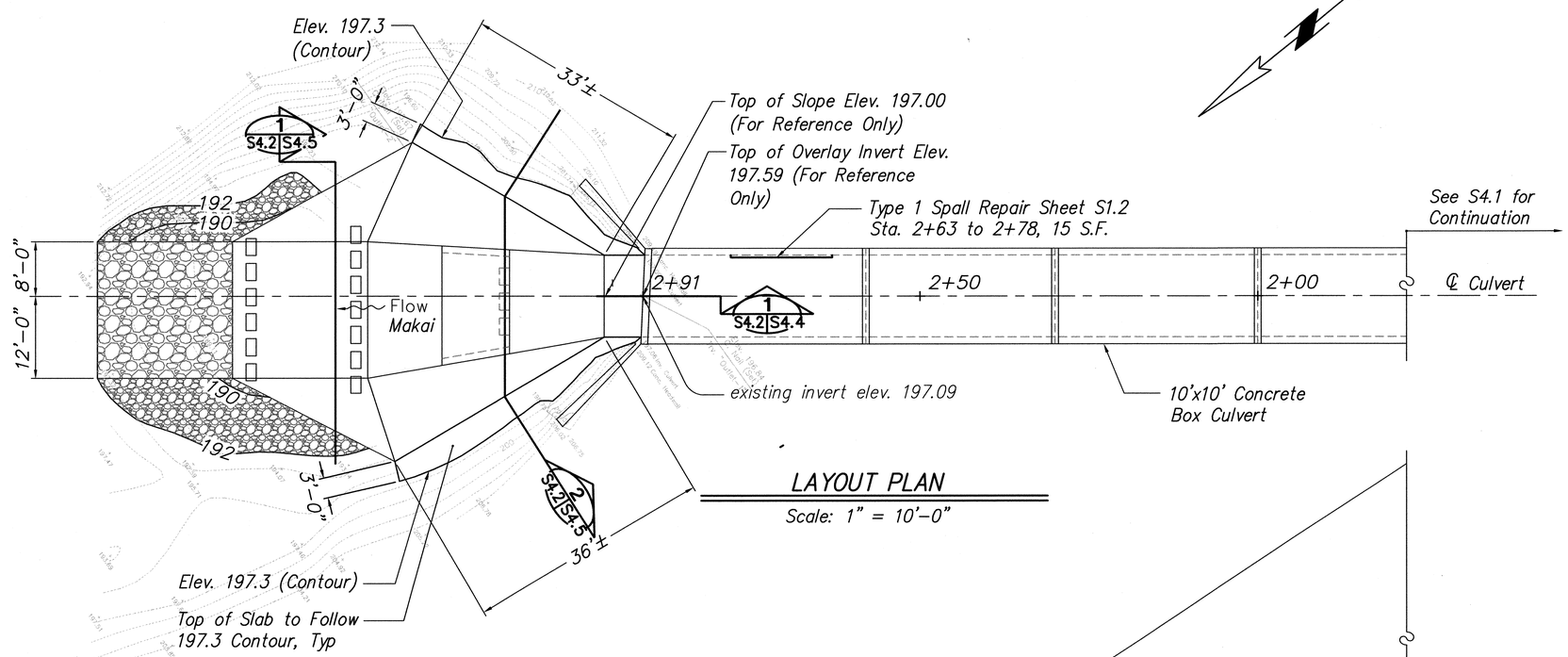

LAYOUT PLAN

Scale: 1" = 10'-0"

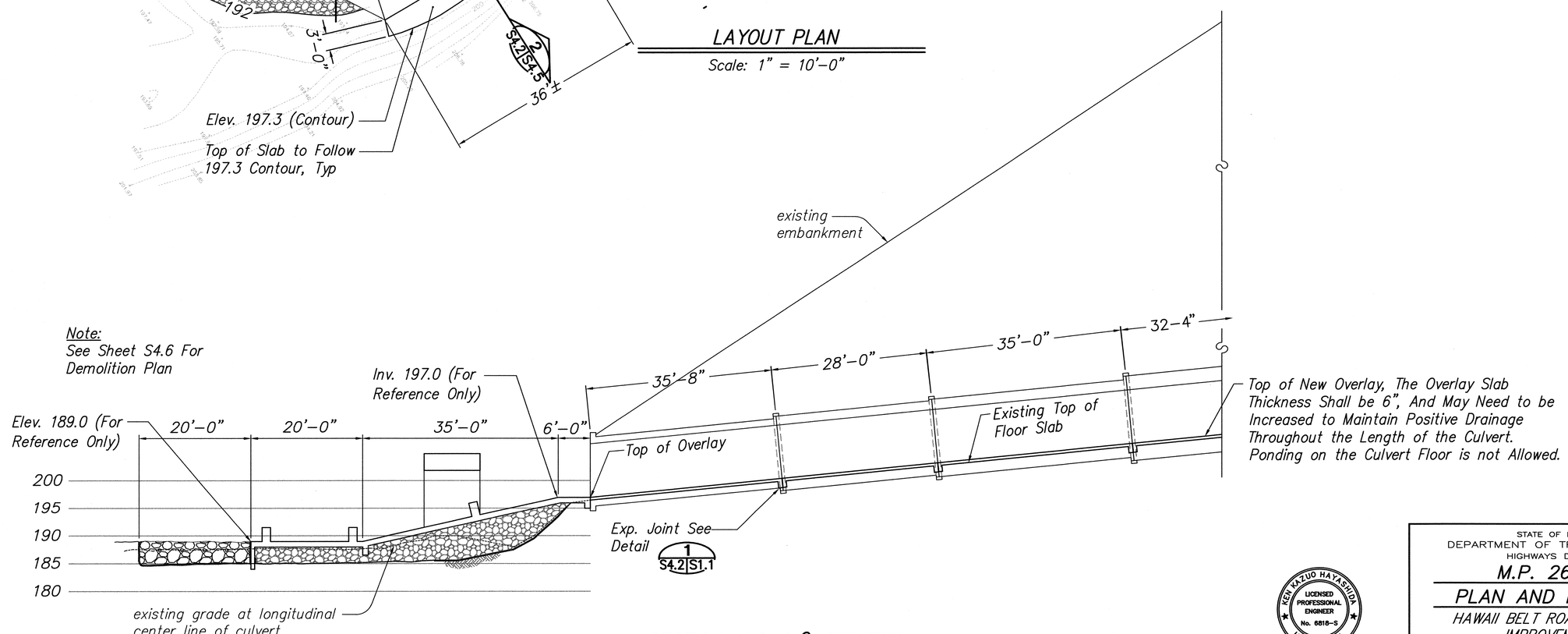

SECTION ALONG ℄ CULVERT

Scale: 1" = 10'-0"

ORIGINAL PLAN | SURVEY PLOTTED BY | DRAWN BY | TRACED BY | DESIGNED BY | QUANTITIES BY | CHECKED BY | DATE | NOTE BOOK No.

0' 10' 20' 30'
1" = 10'

KEN KAZUO HAYASHIDA
LICENSED PROFESSIONAL ENGINEER
No. 6818-S
HAWAII, U.S.A.

EXPIRATION DATE OF THE LICENSE 4/30/2006
THIS WORK WAS PREPARED BY ME OR UNDER MY SUPERVISION

STATE OF HAWAII
DEPARTMENT OF TRANSPORTATION
HIGHWAYS DIVISION

M.P. 26.49

PLAN AND PROFILE

HAWAII BELT ROAD DRAINAGE IMPROVEMENTS

Project No. 19FGH-03-04M

Scale: As Noted Date: April 30, 2004

SHEET No. S4.2 OF 32 SHEETS

FED. ROAD DIST. NO.	STATE	FEDERAL AID PROJ. NO.	FISCAL YEAR	SHEET NO.	TOTAL SHEETS
HAWAII	HAWAII	19FGH-03-04M	2004	S4.3	32

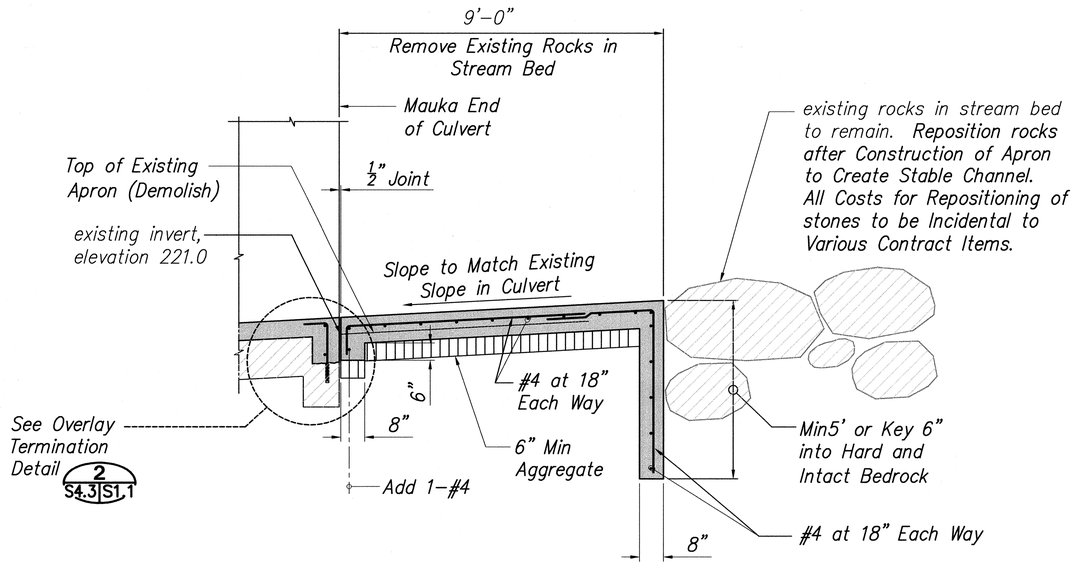

SECTION 1 S4.1 S4.3

Scale: 1/2" = 1'-0"

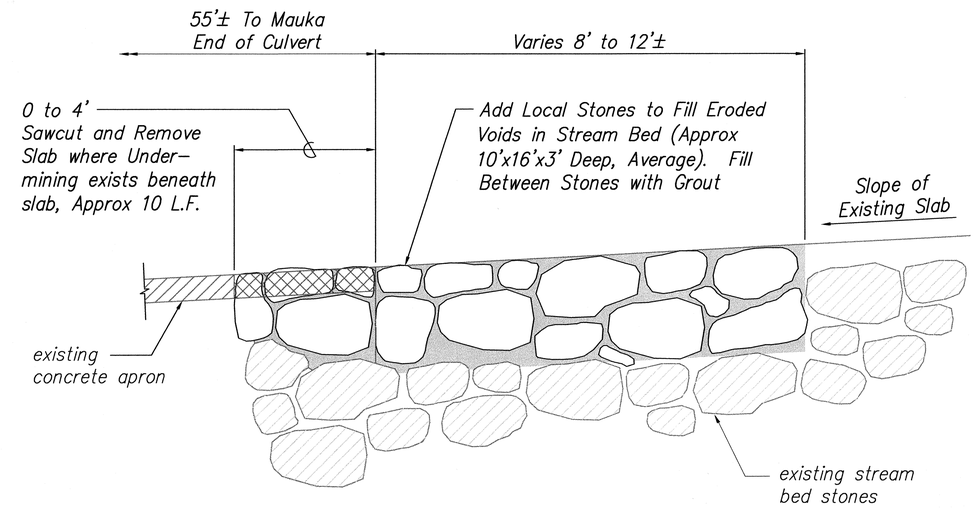

SECTION 2 S4.1 S4.3

Scale: 1/2" = 1'-0"

Note:
1. Concrete surface preparation and application of overlay to be in accordance with Notes, Sht S1.2.

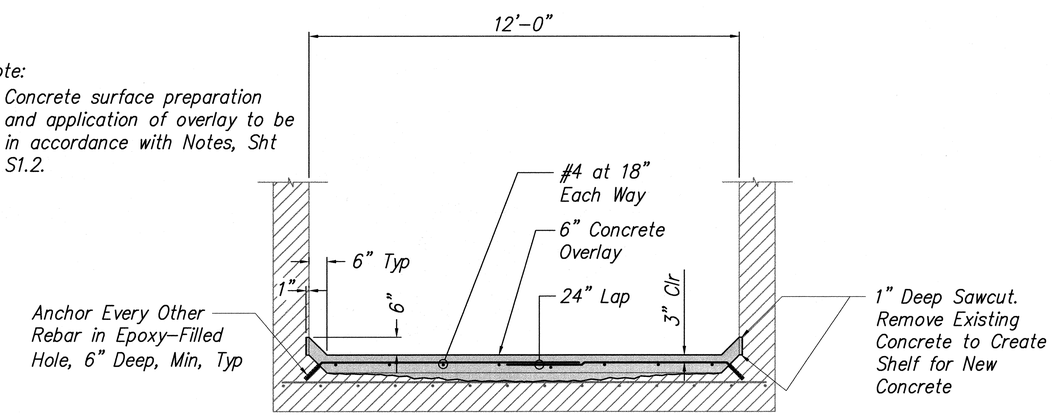

TYPICAL CONCRETE OVERLAY SECTION 3 S4.1 S4.3

Scale: 1/2" = 1'-0"

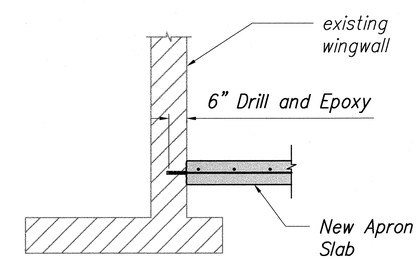

SECTION 4 S4.1 S4.3

Scale: 1/2" = 1'-0"

ORIGINAL PLAN	SURVEY PLOTTED BY
	DRAWN BY
NOTE BOOK	TRACED BY
	DESIGNED BY
No.	QUANTITIES BY
	CHECKED BY
	DATE

KEN KAZUO HAYASHIDA LICENSED PROFESSIONAL ENGINEER No. 6818-S HAWAII, U.S.A.

EXPIRATION DATE OF THE LICENSE 4/30/2006
THIS WORK WAS PREPARED BY ME OR UNDER MY SUPERVISION

0' 1' 2' 3' 4' 5' 6'
1/2" = 1'-0"

STATE OF HAWAII
DEPARTMENT OF TRANSPORTATION
HIGHWAYS DIVISION

M.P. 26.49 CULVERT

SECTIONS AND DETAILS

HAWAII BELT ROAD DRAINAGE IMPROVEMENTS

Project No. 19FGH-03-04M

Scale: As Noted Date: April 30, 2004

SHEET No. S4.3 OF 32 SHEETS

FED. ROAD DIST. NO.	STATE	FEDERAL AID PROJ. NO.	FISCAL YEAR	SHEET NO.	TOTAL SHEETS
HAWAII	HAWAII	19FGH-03-04M	2004	S4.4	32

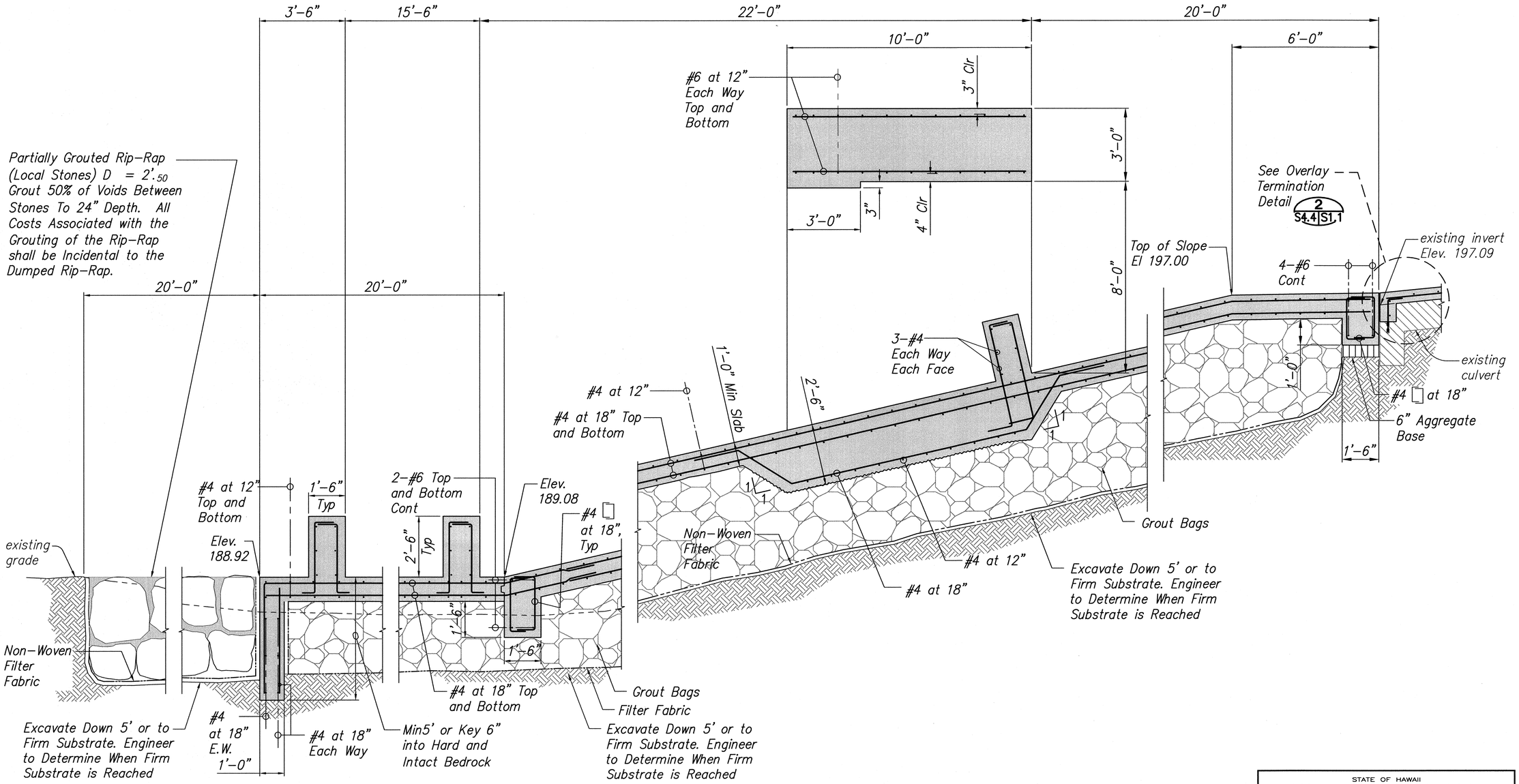

SECTION 1 S4.2 S4.4

Scale: 1/2" = 1'-0"

0' 1' 2' 3' 4' 5' 6'
1/2" = 1'-0"

KEN KAZUO HAYASHIDA LICENSED PROFESSIONAL ENGINEER No. 6818-S HAWAII, U.S.A.

EXPIRATION DATE OF THE LICENSE 4/30/2006
THIS WORK WAS PREPARED BY ME OR UNDER MY SUPERVISION

STATE OF HAWAII
DEPARTMENT OF TRANSPORTATION
HIGHWAYS DIVISION

M.P. 26.49

CULVERT OUTLET SECTIONS

HAWAII BELT ROAD DRAINAGE IMPROVEMENTS

Project No. 19FGH-03-04M

Scale: As Noted Date: April 30, 2004

SHEET No. S4.4 OF 32 SHEETS

ORIGINAL PLAN | SURVEY PLOTTED BY | DRAWN BY | TRACED BY | DESIGNED BY | CHECKED BY | DATE | NOTE BOOK No. | CHECKED BY

5/7/2004 11:26:57 AM

FED. ROAD DIST. NO.	STATE	FEDERAL AID PROJ. NO.	FISCAL YEAR	SHEET NO.	TOTAL SHEETS
HAWAII	HAWAII	19FGH-03-04M	2004	S4.5	32

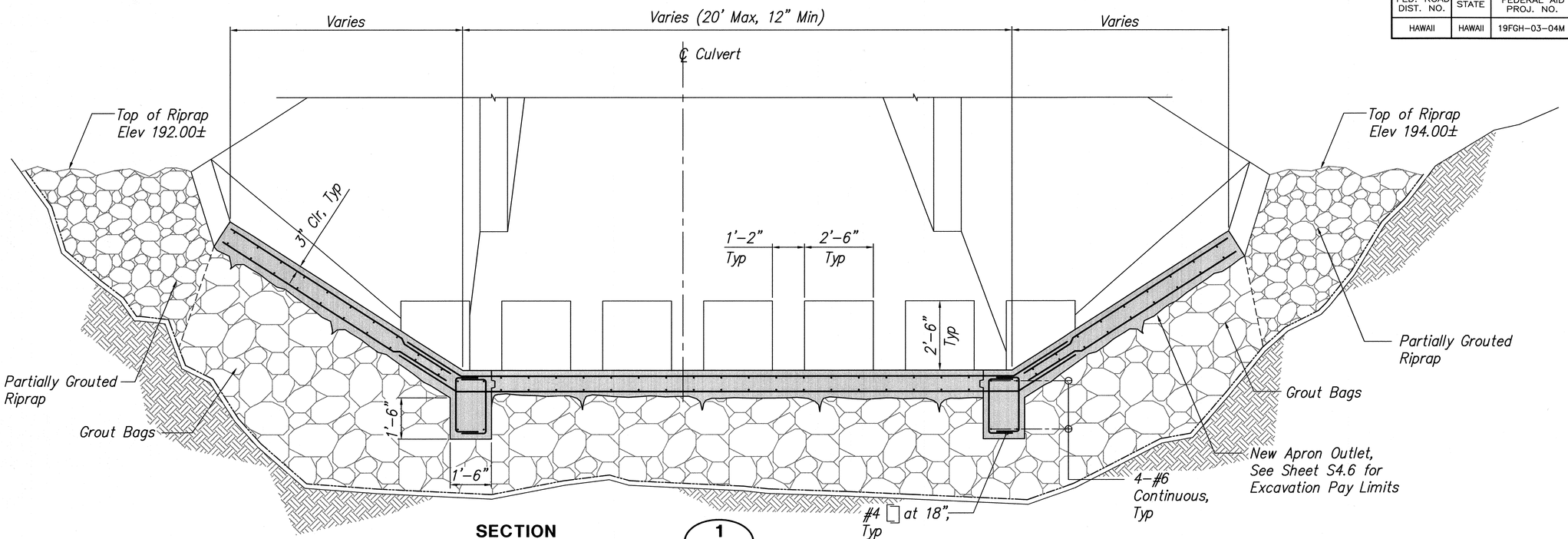

SECTION 1 (S4.2 | S4.5)

Scale: 1/2" = 1'-0"

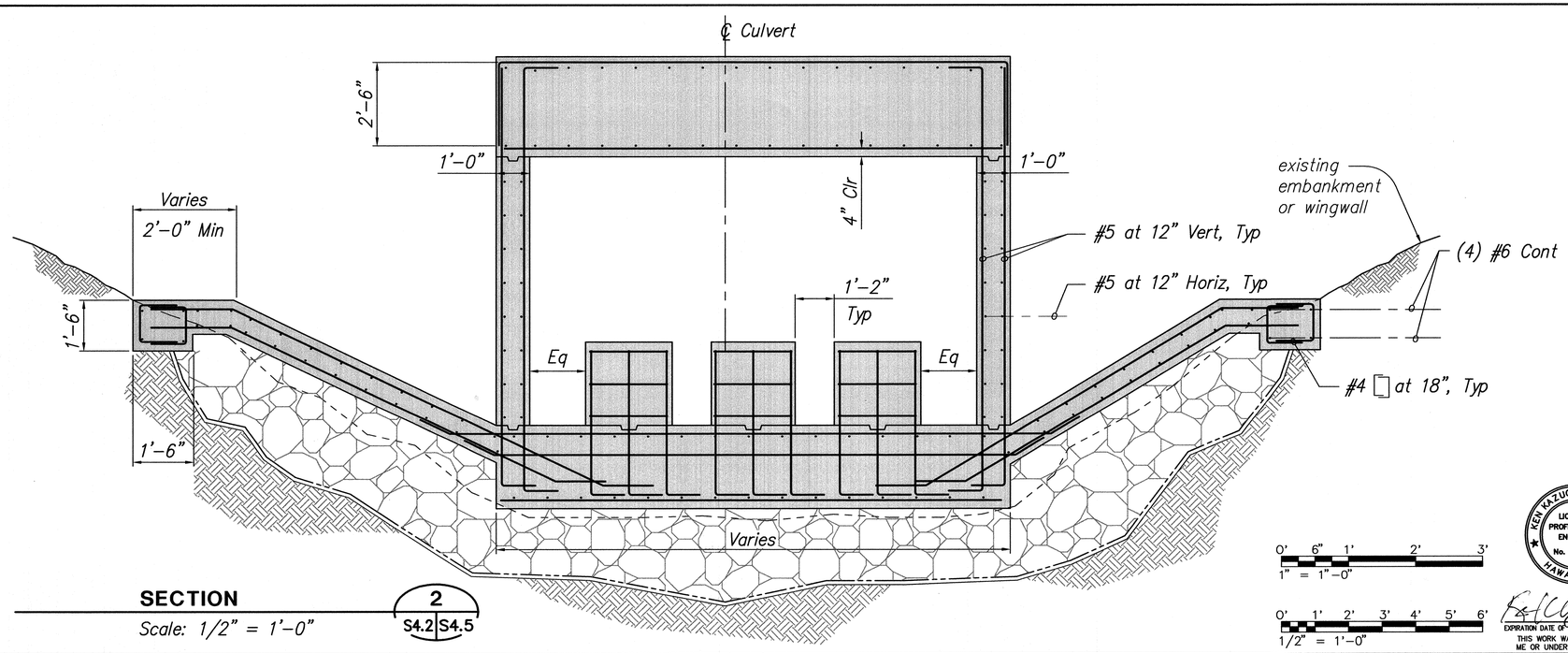

SECTION 2 (S4.2 | S4.5)

Scale: 1/2" = 1'-0"

0' 6" 1' 2' 3'
1" = 1"-0"

0' 1' 2' 3' 4' 5' 6'
1/2" = 1'-0"

KEN KAZUO HAYASHIDA
LICENSED PROFESSIONAL ENGINEER
No. 6818-S
HAWAII, U.S.A.

EXPIRATION DATE OF THE LICENSE 4/30/2006
THIS WORK WAS PREPARED BY ME OR UNDER MY SUPERVISION

STATE OF HAWAII
DEPARTMENT OF TRANSPORTATION
HIGHWAYS DIVISION

M.P. 26.49

CULVERT OUTLET SECTIONS

HAWAII BELT ROAD DRAINAGE IMPROVEMENTS

Project No. 19FGH-03-04M

Scale: As Noted Date: April 30, 2004

SHEET No. S4.5 OF 32 SHEETS

ORIGINAL PLAN | NOTE BOOK No. | SURVEY PLOTTED BY | DRAWN BY | TRACED BY | DESIGNED BY | QUANTITIES BY | CHECKED BY | DATE

5/7/2004 11:23:15 AM

FED. ROAD DIST. NO.	STATE	FEDERAL AID PROJ. NO.	FISCAL YEAR	SHEET NO.	TOTAL SHEETS
HAWAII	HAWAII	19FGH-03-04M	2004	S4.6	32

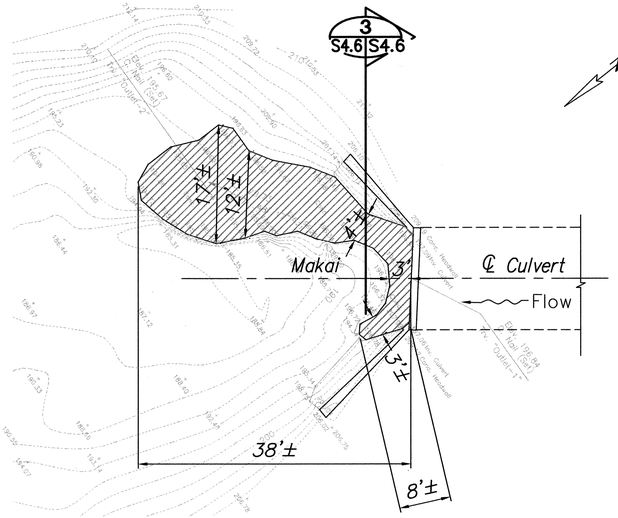

DEMOLITION PLAN (MAKAI END) 1 S4.6 S4.6

Scale: 1" = 10'-0"

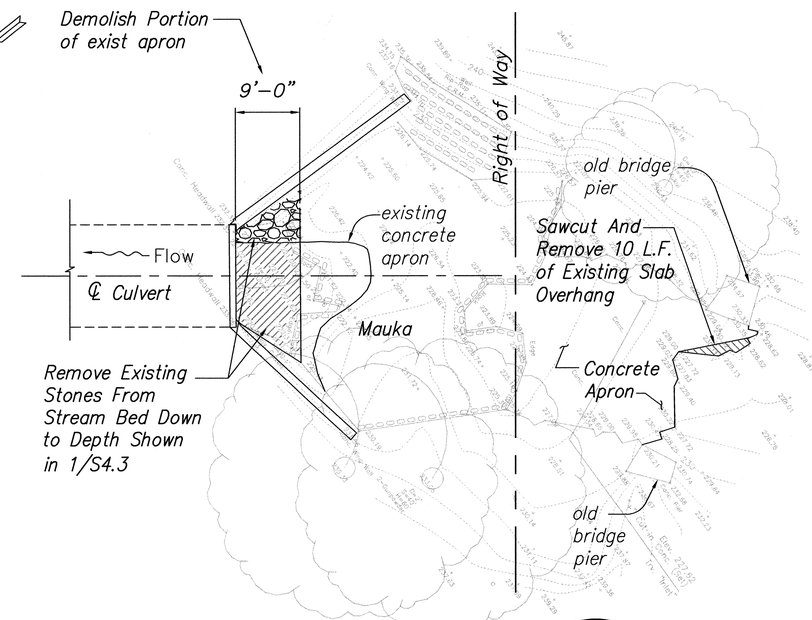

DEMOLITION PLAN (MAUKA END) 2 S4.6 S4.6

Scale: 1" = 10'-0"

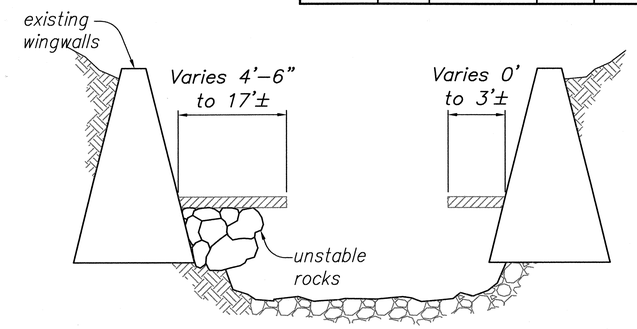

SECTION 3 S4.6 S4.6

Not to Scale

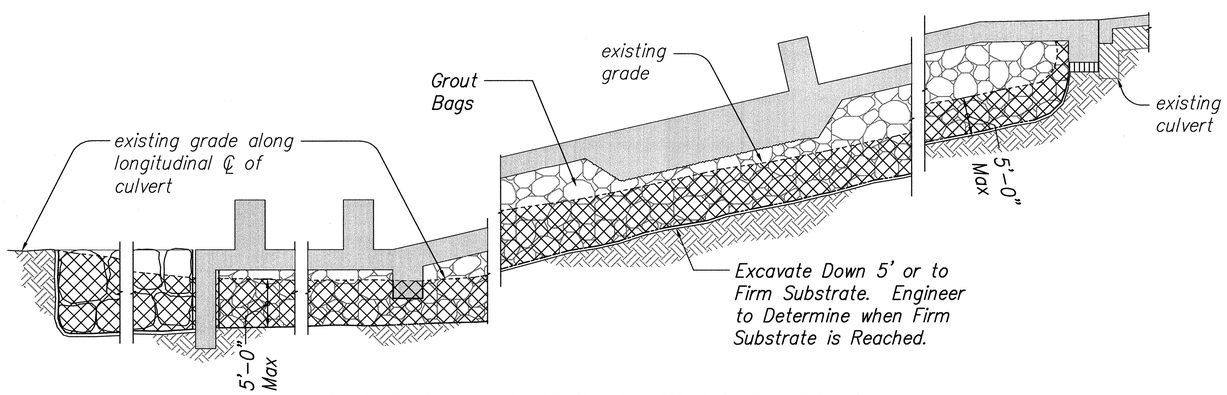

LONGITUDINAL SECTION THRU APRON RAMP

Not to Scale

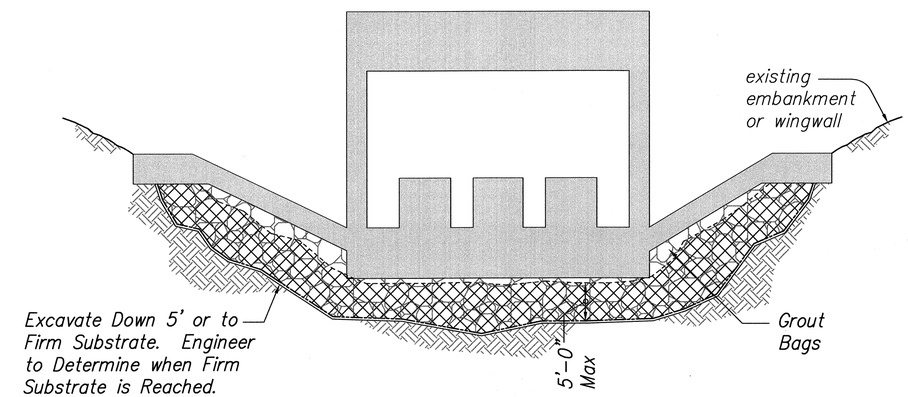

TRANSVERSE SECTION THRU APRON RAMP

Not to Scale

Notes:

1. Break up Concrete Slab Into Pieces (5 S.F. Max) And Place Under/Between Grout Bags for Filler.
2. The Large Stones that Are Currently Beneath The Concrete Apron Slab May Fall During The Demolition of The Slab. The Contractor Shall Take All Precautions Necessary For The Safety of Personnel.
3. The Stones that are Currently Beneath the Concrete Apron Slab may be Used as Fill Material instead of Grout Bags.

Legend

Denotes Item to be Demolished

Denotes Excavation Pay Limits

ORIGINAL PLAN	SURVEY PLOTTED BY	DATE
	SURVEY BY	
	TRACED BY	
NOTE BOOK	DESIGNED BY	
	QUANTITIES BY	
No.	CHECKED BY	

KEN KAZUO HAYASHIDA
LICENSED PROFESSIONAL ENGINEER
No. 6818-S
HAWAII, U.S.A.

0' 10' 20' 30'
1" = 10'

EXPIRATION DATE OF THE LICENSE 4/30/2006
THIS WORK WAS PREPARED BY ME OR UNDER MY SUPERVISION

STATE OF HAWAII
DEPARTMENT OF TRANSPORTATION
HIGHWAYS DIVISION

M.P. 26.49

DEMOLITION PLAN

HAWAII BELT ROAD DRAINAGE IMPROVEMENTS

Project No. 19FGH-03-04M

Scale: As Noted Date: April 30, 2004

SHEET No. S4.6 OF 32 SHEETS

F:\Drafting\2004-05-07_\074.01 hugeland culverts\S4.6-MP26.49.dwg, 5/7/2004 10:25:09 AM, 1:1.20

FED. ROAD DIST. NO.	STATE	FEDERAL AID PROJ. NO.	FISCAL YEAR	SHEET NO.	TOTAL SHEETS
HAWAII	HAWAII	19FGH-03-04M	2004	S5.1	32

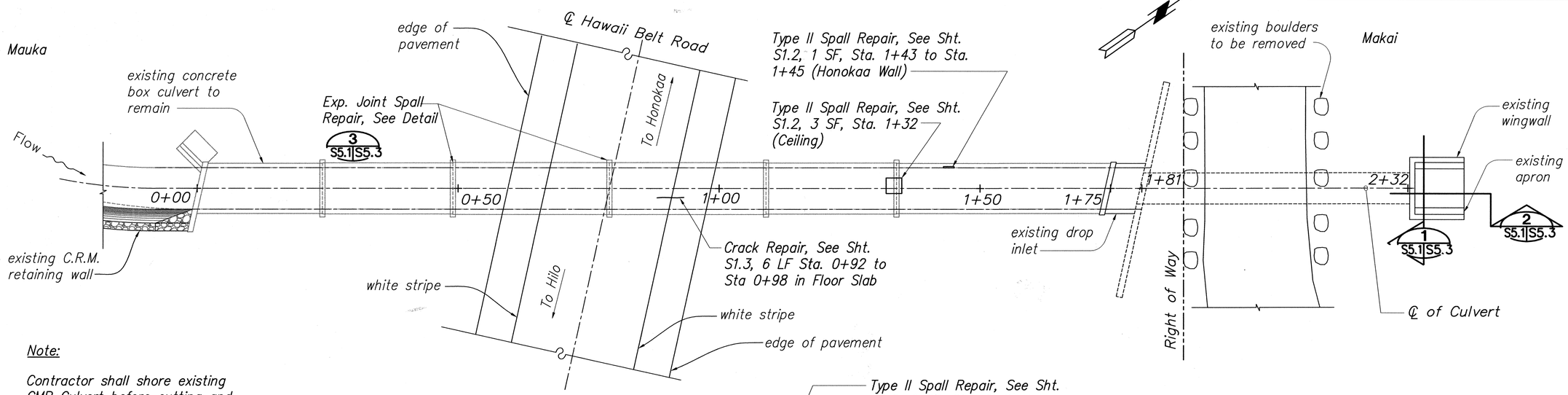

LAYOUT PLAN

Scale: 1" = 10'-0"

Note:

Contractor shall shore existing CMP Culvert before cutting and removing corroded invert. The shoring must be designed to restrain all possible deformation of the existing CMP culvert during excavation and construction of new overlay concrete.

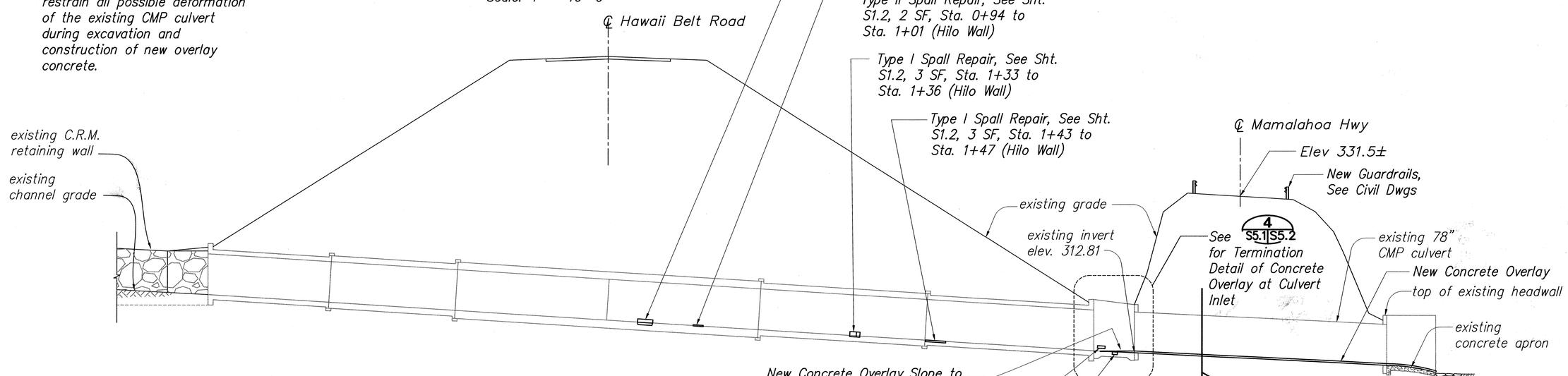

SECTION ALONG ℄ CULVERT

Scale: 1" = 10'-0"

0' 10' 20' 30'
1" = 10'

KEN KAZUO HAYASHIDA
LICENSED PROFESSIONAL ENGINEER
No. 6818-S
HAWAII, U.S.A.

EXPIRATION DATE OF THE LICENSE 4/30/2006
THIS WORK WAS PREPARED BY ME OR UNDER MY SUPERVISION

STATE OF HAWAII
DEPARTMENT OF TRANSPORTATION
HIGHWAYS DIVISION

M.P. 27.05

PLAN AND PROFILE

HAWAII BELT ROAD DRAINAGE IMPROVEMENTS

Project No. 19FGH-03-04M

Scale: As Noted Date: April 30, 2004

SHEET No. S5.1 OF 32 SHEETS

ORIGINAL PLAN	SURVEY PLOTTED BY	DATE
	DRAWN BY	
NOTE BOOK	TRACED BY	
	DESIGNED BY	
	QUANTITIES BY	
No.	CHECKED BY	

FED. ROAD DIST. NO.	STATE	FEDERAL AID PROJ. NO.	FISCAL YEAR	SHEET NO.	TOTAL SHEETS
HAWAII	HAWAII	19FGH-03-04M	2004	S5.2	32

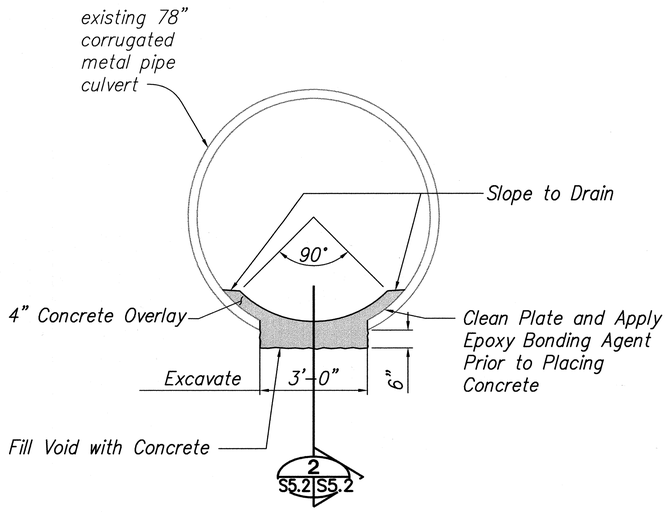

CONCRETE OVERLAY DETAIL 1 S5.1 S5.2

Scale: 1/2" = 1'-0"

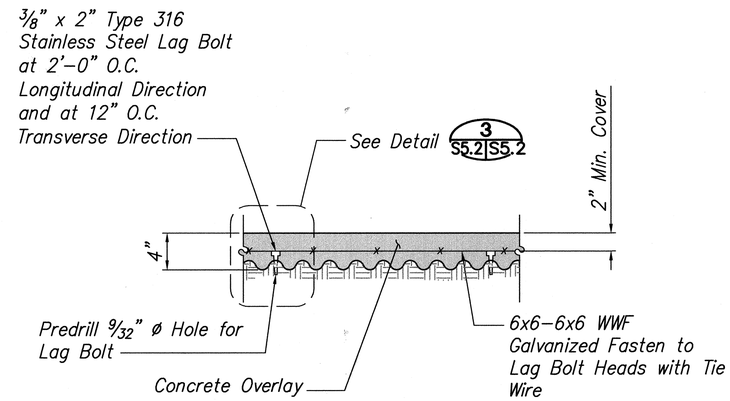

SECTION 2 S5.2 S5.2

Scale: 1 1/2" = 1'-0"

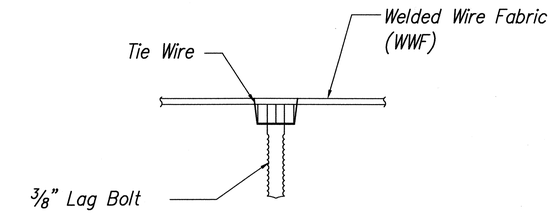

WIRE TIE DETAIL 3 S5.2 S5.2

Scale: 1/2" = 1'-0"

Notes:

1. Prepare Surface of Existing Concrete Slab According to the Notes, Sheet S1.2
2. Apply Bonding Agent to All Concrete and CMP Surfaces to be Overlayed in Accordance with manufacturer's guidelines.
3. No Reinforcing is Required in Overlay Over Existing Concrete.

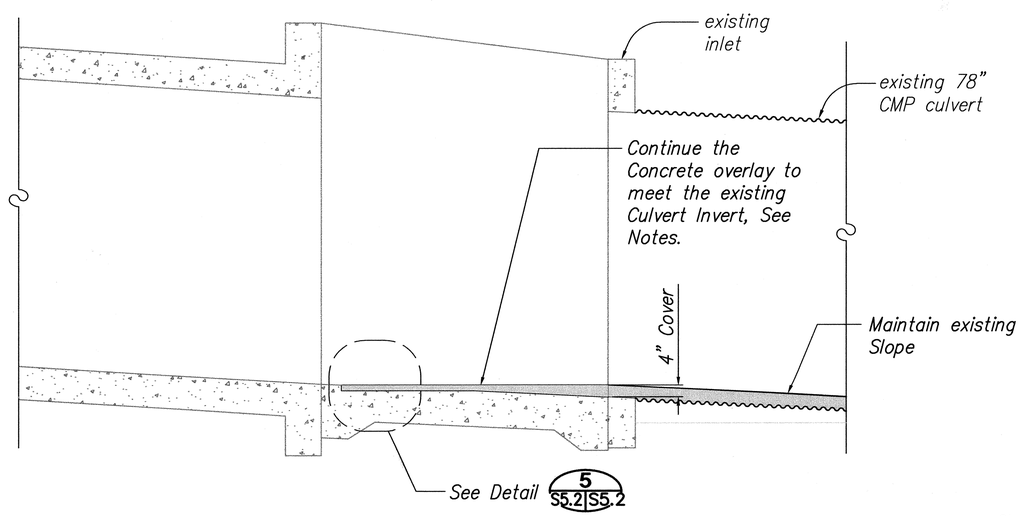

CULVERT SECTION 4 S5.1 S5.2

Scale: 1/2" = 1'-0"

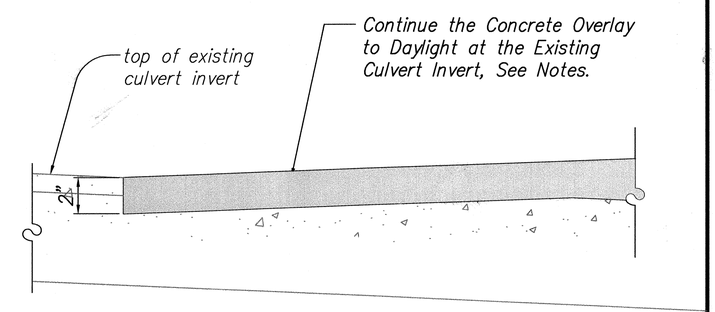

DETAIL 5 S5.2 S5.2

Scale: 3" = 1'-0"

ORIGINAL PLAN	SURVEY PLOTTED BY	DATE
	DRAFT BY	
	TRACED BY	
NOTE BOOK	DESIGNED BY	
	QUANTITIES BY	
No.	CHECKED BY	

0' 6" 1' 2' 3'
1" = 1"-0"

0' 1' 2' 3' 4' 5' 6'
1/2" = 1'-0"

KEN KAZUO HAYASHIDA LICENSED PROFESSIONAL ENGINEER No. 6818-S HAWAII, U.S.A.

EXPIRATION DATE OF THE LICENSE 4/30/2006
THIS WORK WAS PREPARED BY ME OR UNDER MY SUPERVISION

STATE OF HAWAII
DEPARTMENT OF TRANSPORTATION
HIGHWAYS DIVISION

M.P. 27.05 CULVERT

SECTION AND DETAILS

HAWAII BELT ROAD DRAINAGE IMPROVEMENTS

Project No. 19FGH-03-04M

Scale: As Noted Date: April 30, 2004

SHEET No. S5.2 OF 32 SHEETS

FED. ROAD DIST. NO.	STATE	FEDERAL AID PROJ. NO.	FISCAL YEAR	SHEET NO.	TOTAL SHEETS
HAWAII	HAWAII	19FGH-03-04M	2004	S5.3	32

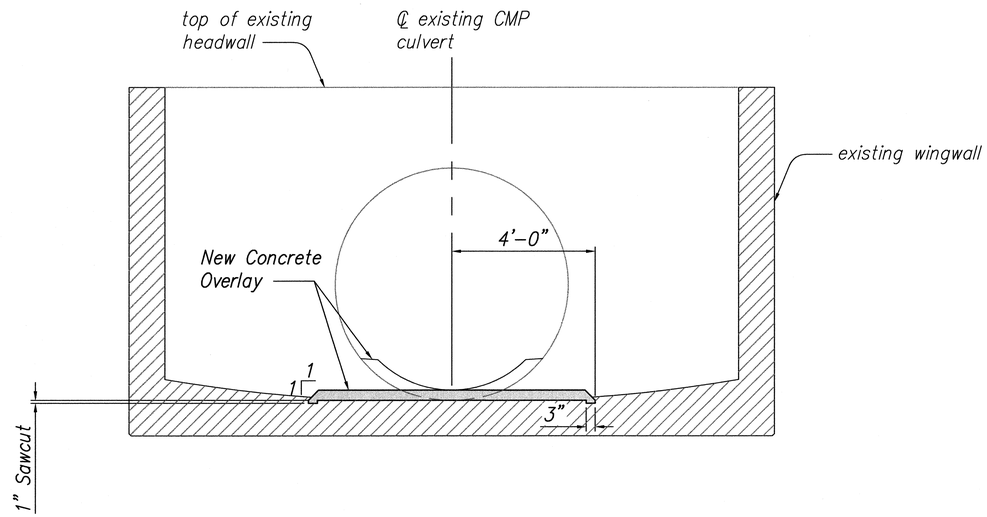

SECTION 1 (S5.1 | S5.3)
Scale: 1/2" = 1'-0"

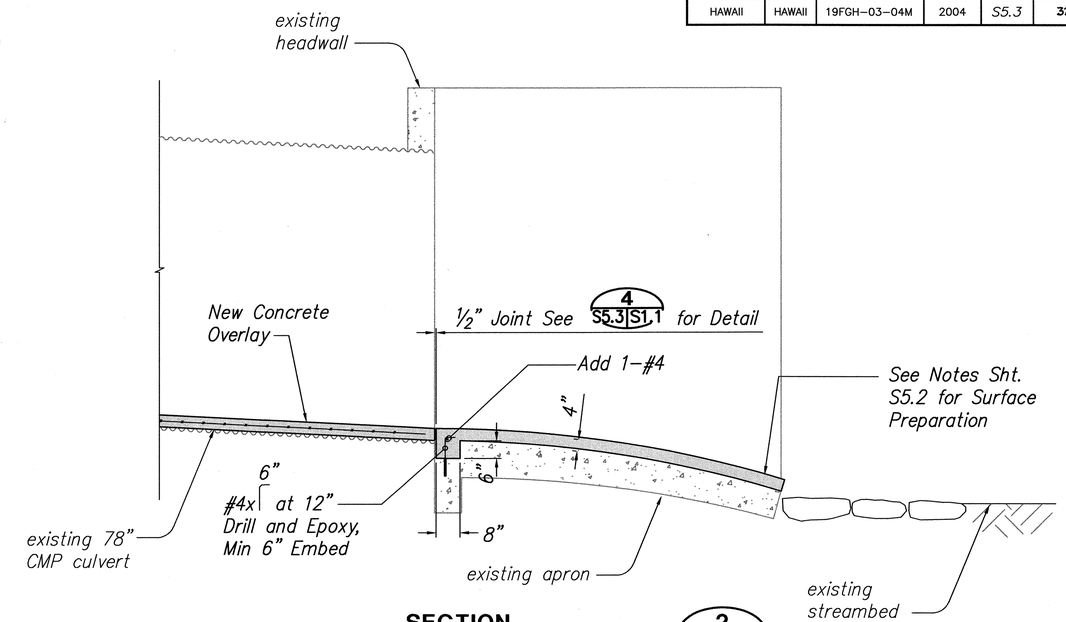

SECTION 2 (S5.1 | S5.3)
Scale: 1/2" = 1'-0"

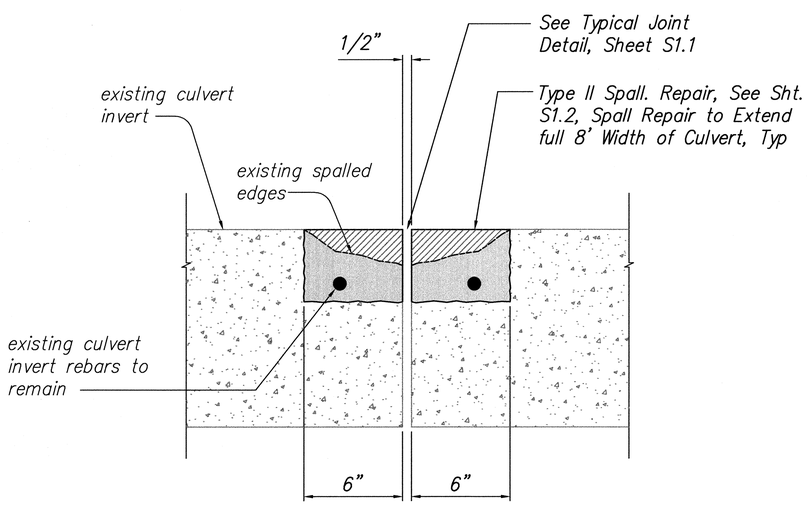

SPALL DETAIL STA. 0+50 & 0+80 (3 | S5.1 | S5.3)
Scale: 3" = 1'-0"

ORIGINAL PLAN	SURVEY PLOTTED BY	DATE
	DRAWN BY	
NOTE BOOK	TRACED BY	
	DESIGNED BY	
	QUANTITIES BY	
No.	CHECKED BY	

0' 6" 1' 2' 3'
1" = 1"-0"

0' 1' 2' 3' 4' 5' 6'
1/2" = 1'-0"

KEN KAZUO HAYASHIDA
LICENSED PROFESSIONAL ENGINEER
No. 6818-S
HAWAII, U.S.A.

EXPIRATION DATE OF THE LICENSE 4/30/2006
THIS WORK WAS PREPARED BY ME OR UNDER MY SUPERVISION

STATE OF HAWAII
DEPARTMENT OF TRANSPORTATION
HIGHWAYS DIVISION

M.P. 27.05

CULVERT OUTLET SECTIONS

HAWAII BELT ROAD DRAINAGE IMPROVEMENTS

Project No. 19FGH-03-04M

Scale: As Noted Date: April 30, 2004

SHEET No. S5.3 OF 32 SHEETS

FED. ROAD DIST. NO.	STATE	FEDERAL AID PROJ. NO.	FISCAL YEAR	SHEET NO.	TOTAL SHEETS
HAWAII	HAWAII	19FGH-03-04M	2004	S6.1	32

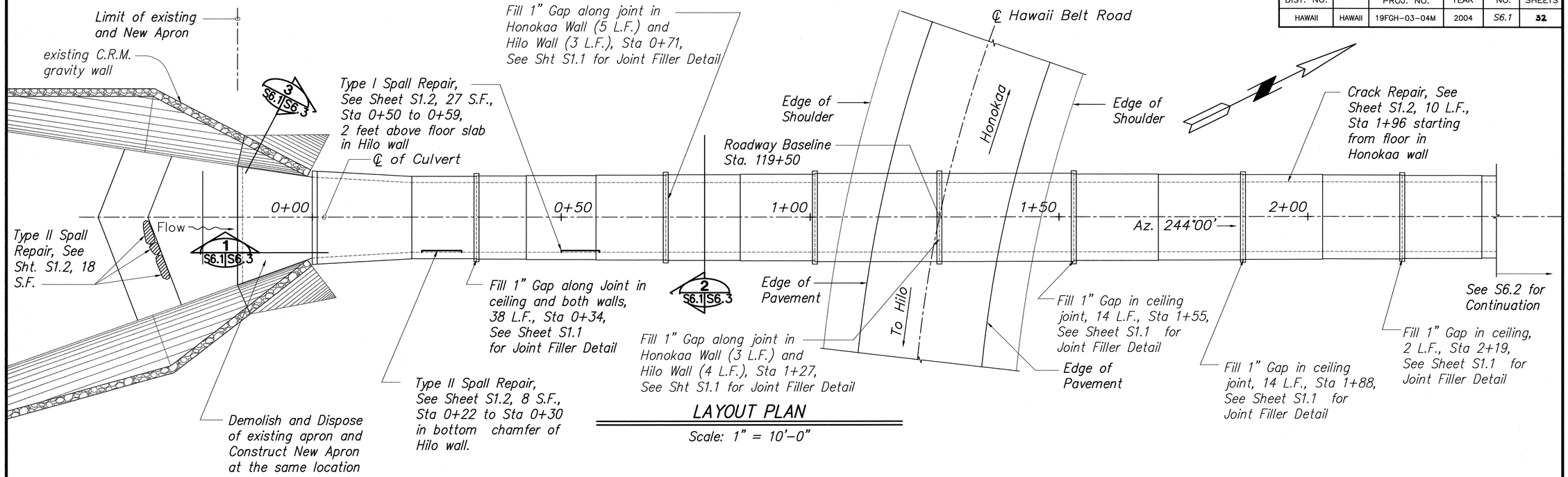

LAYOUT PLAN

Scale: 1" = 10'-0"

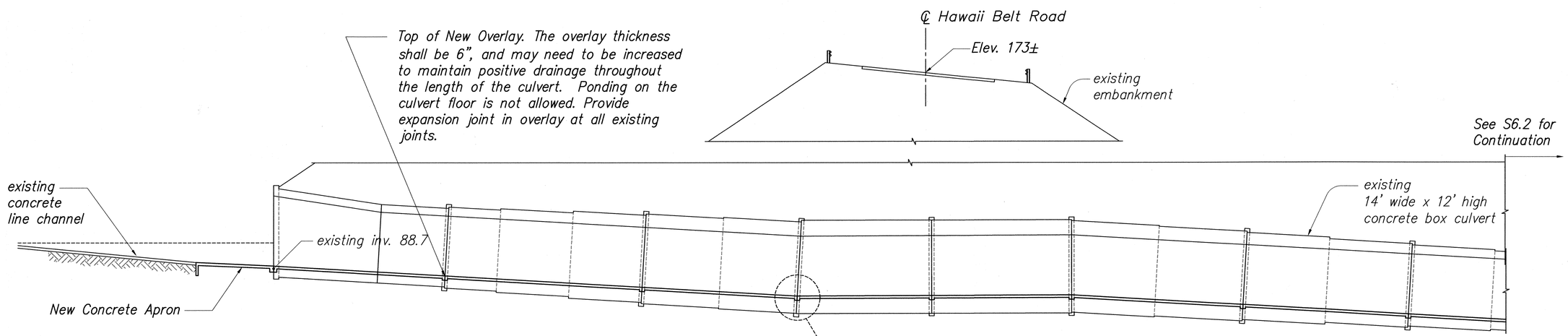

Notes:

Elevations taken from plans dated September 1953, Federal Aid Project No. SDR-3(18), and are included for informational purposes only.

SECTION ALONG ℄ CULVERT

Scale: 1" = 10'-0"

ORIGINAL PLAN	SURVEY PLOTTED BY	DATE
	DRAWN BY	
NOTE BOOK	TRACED BY	
	DESIGNED BY	
	QUANTITIES BY	
No.	CHECKED BY	

0' 10' 20' 30'
1" = 10'

KEN KAZUO HAYASHIDA
LICENSED PROFESSIONAL ENGINEER
No. 6818-S
HAWAII, U.S.A.

EXPIRATION DATE OF THE LICENSE: 4/30/2006
THIS WORK WAS PREPARED BY ME OR UNDER MY SUPERVISION

STATE OF HAWAII
DEPARTMENT OF TRANSPORTATION
HIGHWAYS DIVISION

M.P. 28.46

PLAN AND PROFILE

HAWAII BELT ROAD DRAINAGE IMPROVEMENTS

Project No. 19FGH-03-04M

Scale: As Noted Date: April 30, 2004

SHEET No. S6.1 OF 32 SHEETS

FED. ROAD DIST. NO.	STATE	FEDERAL AID PROJ. NO.	FISCAL YEAR	SHEET NO.	TOTAL SHEETS
HAWAII	HAWAII	19FGH-03-04M	2004	S6.2	32

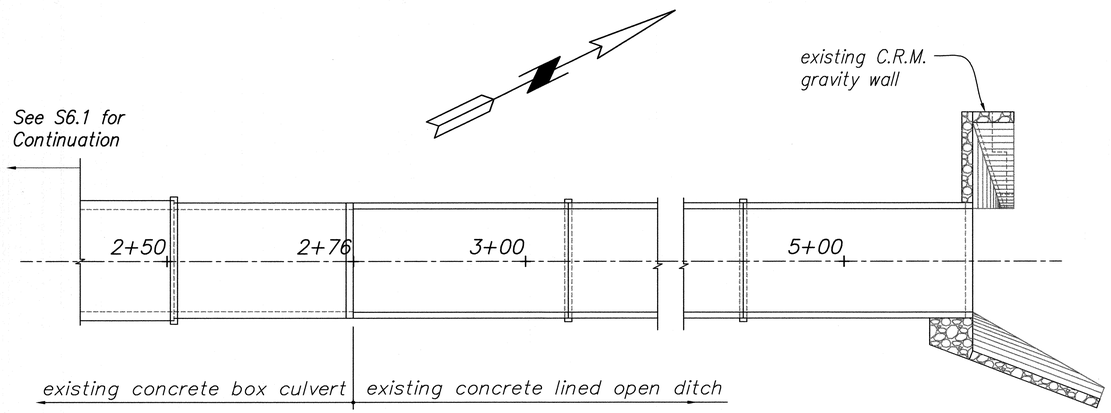

LAYOUT PLAN

Scale: 1" = 10'-0"

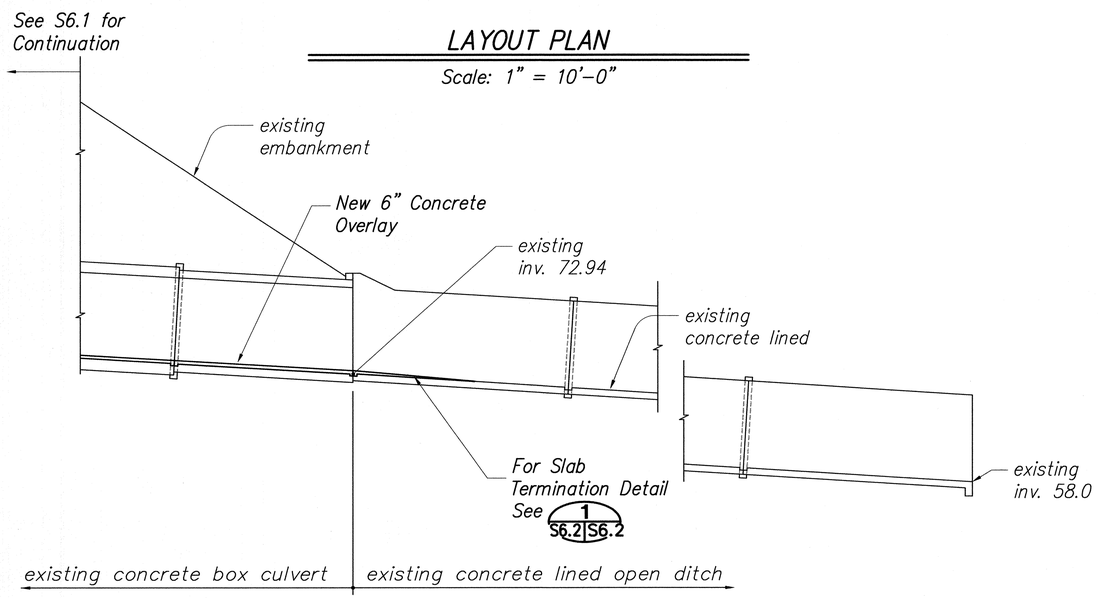

SECTION ALONG ℄ CULVERT

Scale: 1" = 10'-0"

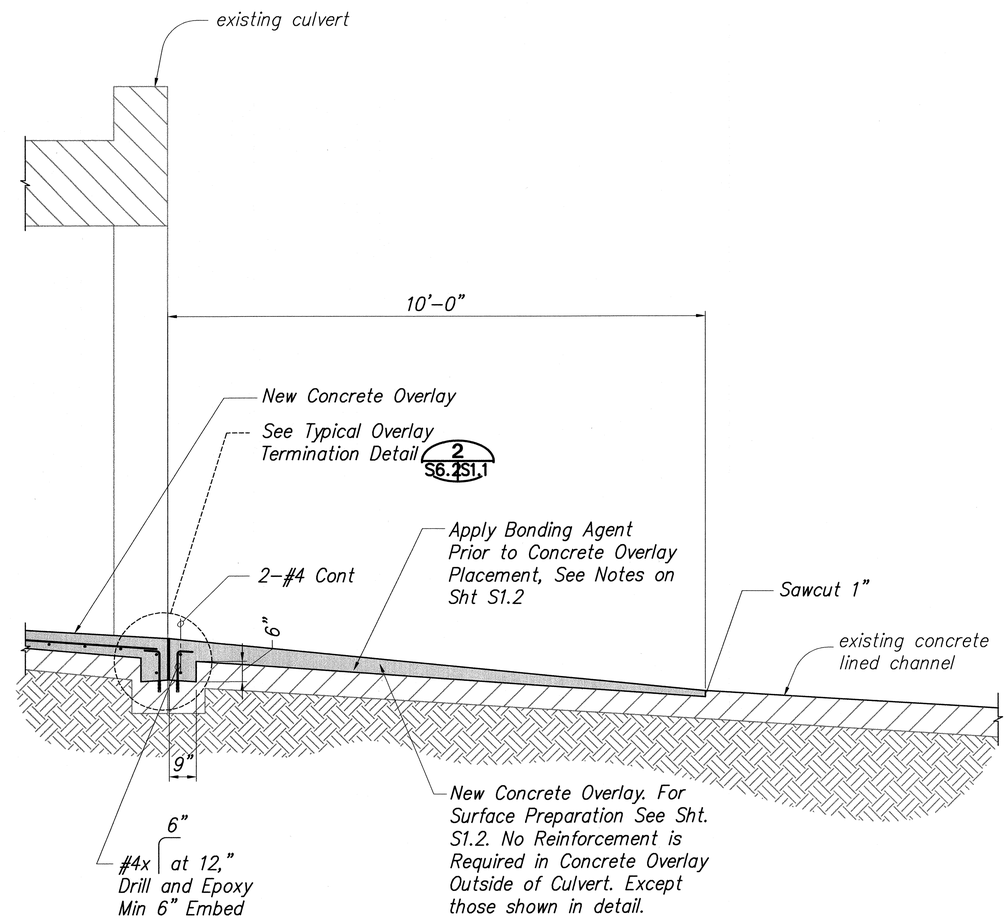

SLAB TERMINATION DETAIL

Scale: 1/2" = 1'-0"

1 S6.2 S6.2

ORIGINAL PLAN	SURVEY PLOTTED BY	DATE
	DRAWN BY	
NOTE BOOK	TRACED BY	
	DESIGNED BY	
	QUANTITIES BY	
No.	CHECKED BY	

0' 10' 20' 30'
1" = 10'

KEN KAZUO HAYASHIDA
LICENSED PROFESSIONAL ENGINEER
No. 6818-S
HAWAII, U.S.A.

EXPIRATION DATE OF THE LICENSE: 4/30/2006
THIS WORK WAS PREPARED BY ME OR UNDER MY SUPERVISION

STATE OF HAWAII
DEPARTMENT OF TRANSPORTATION
HIGHWAYS DIVISION

M.P. 28.46

PLAN AND PROFILE

HAWAII BELT ROAD DRAINAGE IMPROVEMENTS

Project No. 19FGH-03-04M

Scale: As Noted Date: April 30, 2004

SHEET No. S6.2 OF 32 SHEETS

FED. ROAD DIST. NO.	STATE	FEDERAL AID PROJ. NO.	FISCAL YEAR	SHEET NO.	TOTAL SHEETS
HAWAII	HAWAII	19FGH-03-04M	2004	S6.3	32

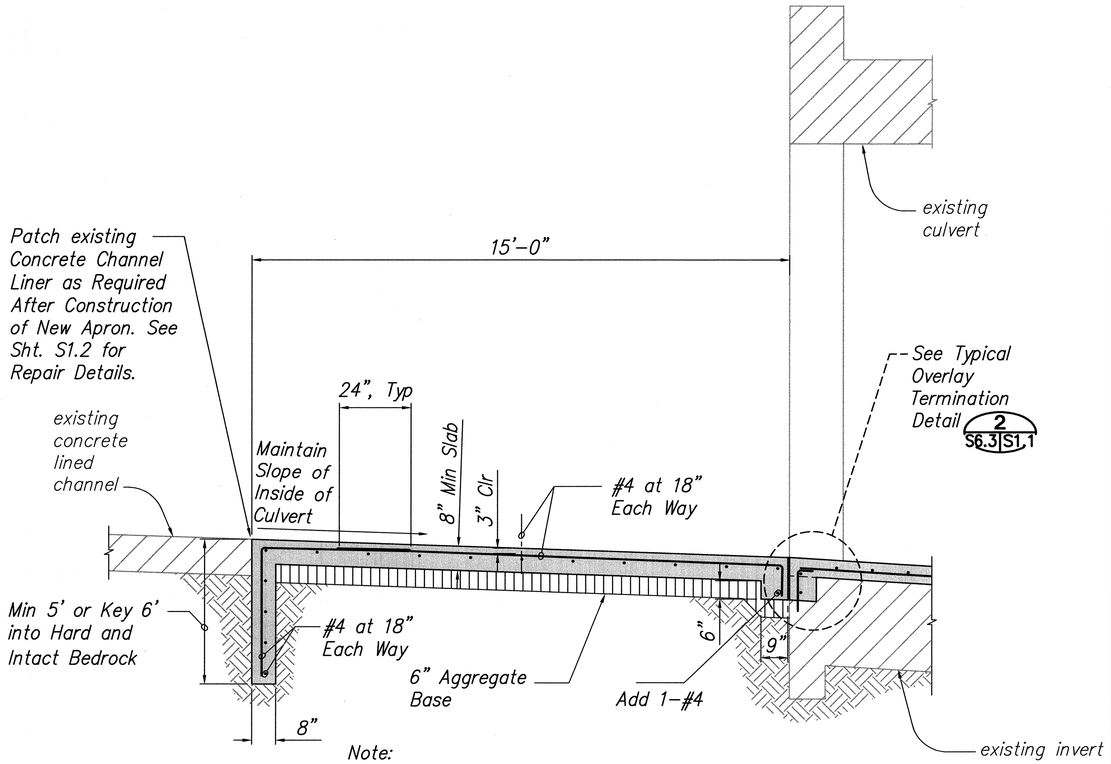

Note:
Demolish Existing Apron. Excavate to Provide For New 8" Apron Slab

NEW APRON SECTION 1 S6.1 S6.3

Scale: 1/2" = 1'-0"

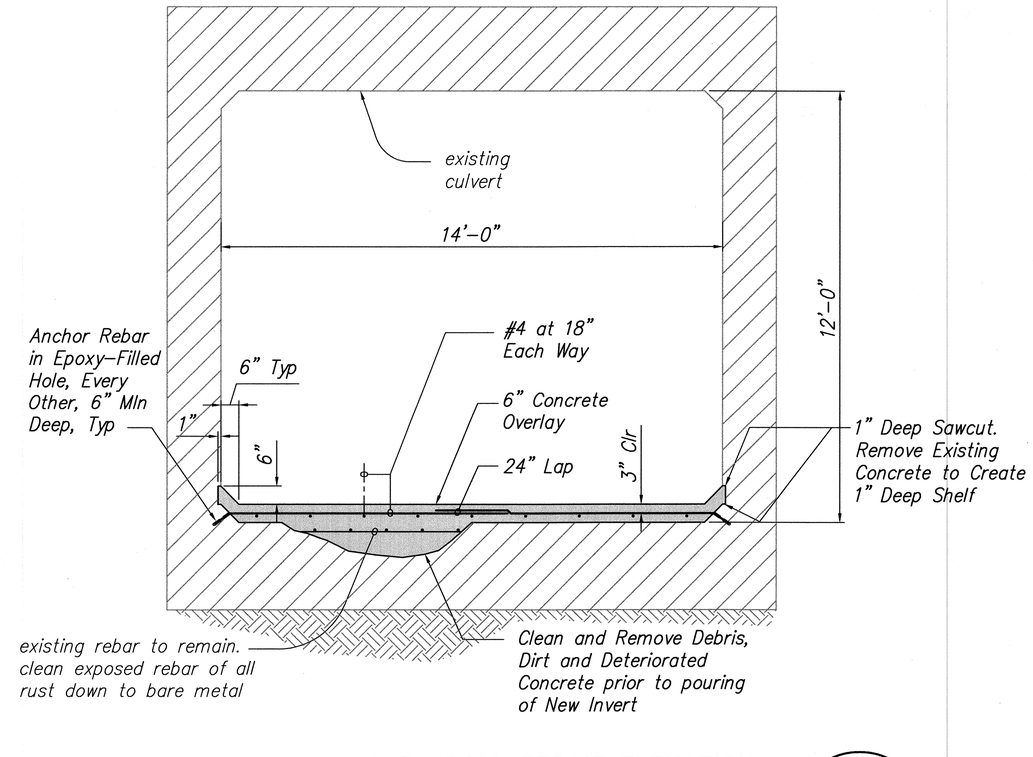

INVERT OVERLAY AND SPALL REPAIR ELEVATION 2 S6.1 S6.3

Scale: 1/2" = 1'-0"

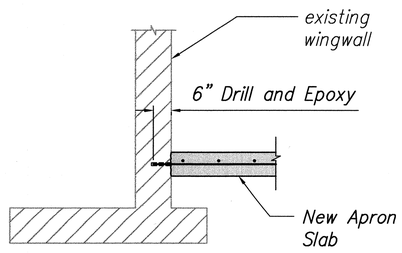

NEW APRON SECTION 3 S6.1 S6.3

Scale: 1/2" = 1'-0"

ORIGINAL PLAN	SURVEY PLOTTED BY	DATE
	DRAWN BY	
NOTE BOOK	TRACED BY	
	DESIGNED BY	
	QUANTITIES BY	
No.	CHECKED BY	

0' 6" 1' 2' 3'
1" = 1"-0"

0' 1' 2' 3' 4' 5' 6'
1/2" = 1'-0"

KEN KAZUO HAYASHIDA LICENSED PROFESSIONAL ENGINEER No. 6818-S HAWAII, U.S.A.

EXPIRATION DATE OF THE LICENSE 4/30/2006
THIS WORK WAS PREPARED BY ME OR UNDER MY SUPERVISION

STATE OF HAWAII
DEPARTMENT OF TRANSPORTATION
HIGHWAYS DIVISION

M.P. 28.46 CULVERT
SECTIONS AND DETAILS

HAWAII BELT ROAD DRAINAGE IMPROVEMENTS

Project No. 19FGH-03-04M

Scale: As Noted Date: April 30, 2004

SHEET No. S6.3 OF 32 SHEETS