FED. ROAD DIST. NO.	STATE	FED. AID PROJ. NO.	FISCAL YEAR	SHEET NO.	TOTAL SHEETS
HAWAII	HAW.	BR-019-2(38)	2002	44A	79

INDEX TO DRAWINGS

SUMMARY OF ESTIMATED QUANTITIES

ITEM NO.	CONTRACT ITEM	QUANTITY	UNIT
202.0441	REMOVAL OF PORTION OF EXISTING CONCRETE STRUCTURE	(180)	(C.Y.) L.S.
202.0442	REMOVAL OF ASPHALT CONCRETE PAVEMENT	(7800)	(S.F.) L.S.
206.6000	STRUCTURE EXCAVATION FOR BRIDGE	6100	C.Y.
206.7000	STRUCTURE BACKFILL	800	C.Y.
206.7300	LOW-DENSITY CONCRETE BACKFILL	7250	C.Y.
206.7400	CLASS A CONCRETE BACKFILL	370	C.Y.
206.8000	FILTER MATERIAL	15	C.Y.
503.1092	CONCRETE IN BRIDGE (EXCLUDING ABUTMENT WALLS, WING WALLS, STAIRS, AND BRIDGE FOOTINGS)	(1550)	(C.Y.) L.S.
503.1093	CONCRETE IN ABUTMENT WALLS, WING WALLS, AND STAIRS (EXCLUDING BRIDGE FOOTINGS)	(1030)	(C.Y.) L.S.
503.1094	CONCRETE IN BRIDGE FOOTINGS	(1840)	(C.Y.) L.S.
504.0100	PRESTRESSED CONCRETE PLANKS	(4510)	(S.F.) L.S.
507.1501	METAL RAILING - TWO RAILS ON PARAPET FOR BRIDGE	690	L.F.
507.7001	CONCRETE PARAPET FOR BRIDGE (INCLUDING END POST)	735	L.F.
511.0020	LOAD TEST	1	EACH
511.0100	DRILLED SHAFT DS-1 - 48 INCH DIAMETER	960	L.F.
511.0101	DRILLED SHAFT DS-2 - 48 INCH DIAMETER	370	L.F.
511.0200	UNCLASSIFIED SHAFT EXCAVATION (DS-1 AND DS-2)	1330	L.F.
511.0300	UNCLASSIFIED EXTRA DEPTH EXCAVATION (DS-1 AND DS-2)	70	L.F.
511.0400	DRILLED SHAFT SIDEWALL OVERREAMING (DS-1 AND DS-2)	70	L.F.
511.0500	TRIAL SHAFT HOLES	57	L.F.
602.0091	REINFORCING STEEL IN BRIDGE (INCLUDING ABUTMENT WALLS, WING WALLS, STAIRS, AND BRIDGE FOOTINGS)	(1,050,000)	(LBS.) L.S.

ABBREVIATIONS

ϕ	DIAMETER
#	NUMBER OR POUND
A.B.	ANCHOR BOLT
A.C.	ASPHALT CONCRETE
AZ.	AZIMUTH
BOT., BOTT., B	BOTTOM
C.J.	CONSTRUCTION JOINT
℄	CENTERLINE
C.G.	CENTER OF GRAVITY
CLR., CL.	CLEAR
CONC.	CONCRETE
CONT.	CONTINUOUS
C.Y.	CUBIC YARD
DBL.	DOUBLE
DET.	DETAIL
D.I.	DUCTILE IRON
DIA.	DIAMETER
DN.	DOWN
DWG.	DRAWING
E.F.	EACH FACE
E.J.	EXPANSION JOINT
ELEV., EL.	ELEVATION
E.W.	EACH WAY
EXP.	EXPANSION
F.B.	FLAT BAR
F.F.	FAR FACE
F.S.	FAR SIDE
G	GIRDER
GALV.	GALVANIZED
G.J.	GROOVED JOINT
HORIZ., H	HORIZONTAL
IN.	INCH
JT.	JOINT
K	KIPS
KSI	KIPS PER SQUARE INCH
LB., LBS.	POUND, POUNDS
L.F.	LINEAR FEET
L.S.	LUMP SUM
MAX.	MAXIMUM
MIN.	MINIMUM
NO., #	NUMBER
N.F.	NEAR FACE
N.T.S.	NOT TO SCALE
O.C.	ON CENTER
PCF	POUNDS PER CUBIC FEET
PL., ℙ	PLATE
PSF	POUNDS PER SQUARE FEET
PSI	POUNDS PER SQUARE INCH
PVC.	POLYVINYL CHLORIDE
R, RAD.	RADIUS
REBAR	REINFORCING BAR
REF.	REFERENCE
REINF.	REINFORCED, REINFORCING, REINFORCEMENT
R.O.W.	RIGHT-OF-WAY
SHT.	SHEET
SL.	SLOPE
STA.	STATION
STD.	STANDARD
STIRR.	STIRRUP
SYM., SYMM.	SYMMETRICAL
THK., TH.	THICK
TYP.	TYPICAL
VERT., V	VERTICAL
W/	WITH

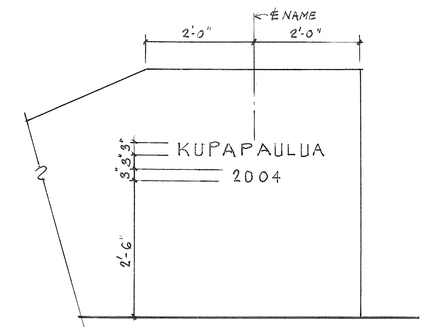

ELEVATION N.T.S.

NOTE: Spacing between letters shall be such that it is legible, and concrete will not spall when removing form.

Note:
1. Name And Date Shall Be Placed At The Trailing End Post On Each Side Of The Roadway.
2. Exact Details And Spacing Of Letters And Figures And Location Shall Be As Directed By The Engineer. Gothic Letters And Figures Approximating Dimensions Shown Will Be Acceptable If Approved By The Engineer. See Ajacent Elevation.

TYPICAL DETAIL OF LETTERS AND FIGURES AT CONCRETE END POST

Not To Scale

MYRON G. OKUBO
LICENSED PROFESSIONAL ENGINEER
No. 4320-S
HAWAII, U.S.A.

THIS WORK WAS PREPARED BY ME OR UNDER MY SUPERVISION

Myron Okubo

DATE	REVISION

STATE OF HAWAII
DEPARTMENT OF TRANSPORTATION
HIGHWAYS DIVISION

INDEX TO DRAWINGS, ABBREVIATIONS, SUMMARY OF ESTIMATED QUANTITIES
HAWAII BELT ROAD
KUPAPAULUA BRIDGE WIDENING
HAMAKUA DISTICT
Federal Aid Project No. BR-019-2(38)

Scale: As Noted Date: June 23, 2003

SHEET No. S-1 OF 36 SHEETS

ORIGINAL PLAN | SURVEY PLOTTED BY | DRAWN BY | TRACED BY | DESIGNED BY | QUANTITIES BY | CHECKED BY | DATE
NOTEBOOK No.

"AS-BUILT"

FED. ROAD DIST. NO.	STATE	FED. AID PROJ. NO.	FISCAL YEAR	SHEET NO.	TOTAL SHEETS
HAWAII	HAW.	BR-019-2(38)	2002	45	73

STRUCTURAL NOTES

1. GENERAL SPECIFICATIONS: HAWAII STANDARD SPECIFICATIONS FOR ROAD, BRIDGE, AND PUBLIC WORKS CONSTRUCTION, 1994, TOGETHER WITH SPECIAL PROVISIONS PREPARED FOR THIS CONTRACT.
2. DESIGN SPECIFICATIONS: AASHTO LRFD BRIDGE DESIGN SPECIFICATIONS, 2nd EDITION, 1998, INCLUDING SUBSEQUENT INTERIM SPECIFICATION.
3. LOADS:
   A. DEAD LOAD: AN ALLOWANCE OF 2 INCHES OF ASPHALT CONCRETE PAVEMENT HAS BEEN PROVIDED FOR IN THE DESIGN.
   B. LIVE LOAD: HL-93
   C. SEISMIC LOAD: ACCELERATION COEFFICIENT = 0.36
      SEISMIC PERFORMANCE ZONE = 4
      IMPORTANCE CATEGORY = CRITICAL BRIDGE
      SOIL PROFILE TYPE I
   D. RAILING TEST LEVEL = TL-4
4. MATERIALS:
   A. ALL CONCRETE SHALL BE 4,000 PSI (AT 28 DAYS) MINIMUM, UNLESS OTHERWISE NOTED. THE MAXIMUM W/C RATIO SHALL BE 0.45.
   B. ALL REINFORCING STEEL SHALL CONFORM TO ASTM A615, GRADE 60, UNLESS OTHERWISE NOTED.
   C. ALL MISCELLANEOUS STEEL SHALL CONFORM TO ASTM A36 AND BE HOT-DIP GALVANIZED AFTER FABRICATION, UNLESS OTHERWISE NOTED.
   D. ALL PIPE SECTIONS SHALL CONFORM TO ASTM A53 (TYPE E), GRADE B, AND BE HOT-DIP GALVANIZED AFTER FABRICATION.
   E. ALL STRUCTURAL TUBE SECTIONS SHALL CONFORM TO ASTM A500, GRADE B, AND BE HOT-DIP GALVANIZED AFTER FABRICATION.
   F. ALL ANCHOR BOLTS SHALL CONFORM TO ASTM A307, GRADE A. ALL NUTS SHALL CONFORM TO ASTM A563, GRADE DH. ALL WASHERS, WHERE REQUIRED, SHALL CONFORM TO ASTM F436, TYPE 1. ALL BOLTS, NUTS, AND WASHERS SHALL BE HOT-DIP GALVANIZED AFTER FABRICATION, UNLESS OTHERWISE NOTED.
   G. ELASTOMERIC BEARING PADS SHALL BE 70 HARDNESS.
   H. LOW-DENSITY CONCRETE BACKFILL SHALL BE AN ENGINEERED FILL WITH A MAXIMUM WET PLASTIC DENSITY OF 35 PCF AND WITH A MINIMUM COMPRESSIVE STRENGTH (AT 28 DAYS) OF 50 PSI.
   J. TETRAGUARD AS20 SHRINKAGE REDUCING ADMIXTURE, OR AN APPROVED EQUAL, SHALL BE INCLUDED IN THE CONCRETE MIX FOR THE ARCH BEAMS, BEAMS, WIDENED BRIDGE DECK AND EDGE BEAMS, CONCRETE PARAPET, AND CONCRETE TOPPING. THE REQUIRED DOSAGE SHALL BE 96 OUNCES PER CUBIC YARD OF CONCRETE. ADDITION OF SHRINKAGE REDUCING ADMIXTURE SHALL BE AS RECOMMENDED BY THE MANUFACTURER.
5. REINFORCEMENT:
   A. UNLESS OTHERWISE NOTED, THE COVERING MEASURED FROM THE SURFACE OF THE CONCRETE TO THE FACE OF ANY REINFORCING BARS SHALL BE AS FOLLOWS:
      1. DECK SLABS TOP AND BOTTOM BARS = 1-1/2" CLR
      2. RAILINGS AND PARAPETS = 2" CLR
      3. FORMED SURFACES EXPOSED TO EARTH AND WEATHER = 2" CLR
      4. BOTTOM AND SIDES OF FOOTINGS AND WHERE CONCRETE DEPOSITED ON GRADE = 3" CLR
      5. DRILLED SHAFTS = 3" CLR (TO SPIRALS)
   B. MINIMUM CLEAR SPACING BETWEEN PARALLEL BARS SHALL BE 1-1/2 TIMES THE DIAMETER OF THE BAR (FOR NON BUNDLED BARS) OR 1-1/2 TIMES THE DIAMETER DERIVED FROM THE EQUIVALENT TOTAL AREA OF THE BARS (FOR BUNDLED BARS), BUT IN NO CASE SHALL THE CLEAR DISTANCE BETWEEN THE PARALLEL BARS BE LESS THAN 1-1/2 TIMES THE MAXIMUM SIZE OF THE COARSE AGGREGATE OR 1-1/2 INCHES.
   C. ALL DIMENSIONS RELATING TO REINFORCING BARS (E.G. SPACING OF BARS, ETC.) ARE TO CENTER OF BARS, UNLESS OTHERWISE NOTED.
   D. ALL DIMENSIONS RELATING TO NEW REINFORCING BARS WERE DETERMINED BASED ON THE LOCATION OF THE EXISTING REINFORCING BARS AS INDICATED ON THE EXISTING DRAWINGS. CONTRACTOR SHALL VERIFY THE LOCATION OF ALL EXISTING REINFORCING BARS PRIOR TO DRILLING FOR EPOXY EMBEDMENT OF NEW REINFORCING BARS.
   E. EXISTING REINFORCING BARS SHALL NOT BE CUT, UNLESS OTHERWISE NOTED ON THE BRIDGE DEMOLITION PLANS.
   F. ALL DRILLED HOLES IN THE EXISTING STRUCTURE SHALL BE CLEANED, FILLED WITH EPOXY, AND REINFORCING BARS SET IN PLACE WITHIN AN EIGHT (8) HOUR WORK DAY
   G. ALL SPLICES IN REINFORCING BARS SHALL BE WITH A MECHANICAL CONNECTOR, UNLESS OTHERWISE NOTED.
   H. REINFORCING BARS SHALL BE DETAILED IN ACCORDANCE WITH ACI MANUAL OF STANDARD PRACTICE FOR DETAILING REINFORCED CONCRETE HIGHWAY STRUCTURES, UNLESS OTHERWISE NOTED.
   I. REINFORCING BARS SHALL BE SECURELY TIED AT ALL INTERSECTIONS AND LAP SPLICES EXCEPT WHERE THE SPACING OF INTERSECTIONS IS LESS THAN 12 INCHES IN EACH DIRECTION, IN WHICH CASE ALTERNATE INTERSECTIONS SHALL BE TIED.
6. GENERAL CONSTRUCTION NOTES:
   A. SEE STANDARD SPECIFICATIONS AND SPECIAL PROVISIONS.
   B. ALL ITEMS NOTED INCIDENTAL WILL NOT BE PAID FOR SEPARATELY.
   C. STANDARD DETAIL DRAWINGS REFER TO ALL STRUCTURES IN GENERAL, EXCEPT FOR MODIFICATIONS AS MAY BE REQUIRED FOR SPECIAL CONDITIONS. FOR SUCH MODIFICATIONS, REFER TO THE CORRESPONDING DETAILED DRAWINGS.
   D. THE CONTRACTOR SHALL COMPLY WITH ALL CONSTRUCTION PERMITS FOR THIS PROJECT. IN ADDITION, THE CONTRACTOR SHALL COMPLY WITH ALL APPLICABLE LAWS OF THE FEDERAL, STATE AND COUNTY GOVERNMENTS.
   E. IN THE EVENT THAT ANY UNANTICIPATED SITES OF REMAINS SUCH AS BONES OR CHARCOAL DEPOSITS, HUMAN BURIALS, ROCK OR CORAL ALIGNMENTS, PAVINGS OR WALLS ARE ENCOUNTERED, THE CONTRACTOR SHALL STOP WORK IN THE AREA OF THE FIND AND CONTACT THE RESIDENT ENGINEER IMMEDIATELY. IN ADDITION, THE STATE HISTORIC PRESERVATION DIVISION SHALL BE CONTACTED IMMEDIATELY AT (808) 692-8015. WORK MAY RECOMMENCE ONLY WITH THE ENGINEER'S APPROVAL.
   F. UNLESS OTHERWISE NOTED, ALL VERTICAL DIMENSIONS ARE MEASURED PLUMB.
   G. THE CONTRACTOR SHALL VERIFY ALL SITE CONDITIONS BEFORE COMMENCING WITH WORK.
   H. THE CONTRACTOR SHALL VERIFY THE LOCATION OF ALL UNDERGROUND UTILITY LINES AND NOTIFY THE RESPECTIVE OWNERS BEFORE COMMENCING THE WORK OF EXCAVATION OR DRILLED SHAFTS. THE CONTRACTOR SHALL VERIFY THE LOCATION AND AVOID ALL OVERHEAD UTILITY LINES DURING CONSTRUCTION. THE CONTRACTOR MAY RELOCATE AND REPLACE THE OVERHEAD UTILITY LINES, IF DEEMED NECESSARY, AT NO COST TO THE STATE.
   I. THE CONTRACTOR SHALL REFER TO THE EXISTING DRAWINGS FOR THE APPROXIMATE LOCATION AND SIZE OF ALL EXISTING REINFORCING BARS PRIOR TO DRILLING.
   J. THE CONTRACTOR SHALL OFFSET NEW REINFORCING BARS AS REQUIRED TO AVOID EXISTING REINFORCING BARS.
   K. FOR CONCRETE FINISH, SEE STANDARD SPECIFICATIONS.
   L. UNLESS OTHERWISE NOTED, ALL EXPOSED CONCRETE EDGES SHALL BE CHAMFERED 3/4" X 3/4".
   M. WHERE NEW REINFORCING BARS TERMINATE AT THE EXISTING STRUCTURE, DRILL AND EPOXY REINFORCING BARS INTO EXISTING WITH 12 INCHES MINIMUM EMBEDMENT, UNLESS OTHERWISE NOTED.
   N. DRILLED HOLES IN EXISTING CONCRETE SHALL BE CLEANED, FILLED WITH EPOXY, AND REINFORCING BAR SET IN PLACE WITHIN AN EIGHT (8) HOUR WORK DAY.
   O. ELASTOMERIC BEARING PADS SHALL BE SECURED TO THE CONCRETE BEARING SURFACE WITH ADHESIVES OR OTHER MEANS NECESSARY AS APPROVED BY THE ENGINEER.
   P. FINISH GRADES SHOWN ON THE PLANS ARE FOR BIDDING PURPOSES ONLY. CONTRACTOR SHALL VERIFY AND SUBMIT THE GRADES FOR THE EXISTING CONCRETE DECK TO THE ENGINEER SO THAT FINAL FINISH GRADES MAY BE VERIFIED.
   Q. NEW DECK SLAB AND CONCRETE TOPPING SHALL NOT BE OPEN TO TRAFFIC UNTIL CONCRETE HAS ATTAINED ITS DESIGN STRENGTH, BUT NOT LESS THAN 7 DAYS.
7. SURFACE PREPARATION OF EXISTING CONCRETE:
   A. ALL EXISTING CONCRETE SURFACES WHERE FRESH CONCRETE IS TO BE PLACED AGAINST SHALL BE ROUGHENED BY SAND-BLASTING ONLY. ONLY IMMEDIATE SURFACE NEEDS TO BE REMOVED SUCH THAT SURFACE IS NOT SMOOTH.
   B. PRIOR TO PLACEMENT OF REINFORCING STEEL AND FRESH CONCRETE, EXISTING CONCRETE SURFACES SHALL BE CLEANED AND FREE OF LAITANCE.
   C. EXISTING CONCRETE SURFACES SHALL BE DAMPENED WITH CLEAN POTABLE WATER PRIOR TO PLACEMENT OF FRESH CONCRETE. HOWEVER, FRESH CONCRETE SHALL NOT BE PLACED IN FREESTANDING OR PUDDLED WATER.
   D. EXISTING CONCRETE SURFACES TO RECEIVE AN EPOXY BONDING ADHESIVE PRIOR TO PLACEMENT OF FRESH CONCRETE SHALL BE PREPARED AS RECOMMENDED BY THE MANUFACTURER.
8. CONSTRUCTION OF ABUTMENT FOOTINGS:
   A. EXISTING FOOTINGS AND BENCHED CUT-SLOPES SHALL BE BRACED DURING EXCAVATION AND BACKFILL. BRACING SUCH AS SHEETPILING, GUNITE AND SOIL NAILING, ETC. SHALL BE THE RESPONSIBILITY OF THE CONTRACTOR AND SHALL BE DESIGNED AND STAMPED BY A LICENSED PROFESSIONAL ENGINEER IN THE STATE OF HAWAII. COSTS SHALL BE BORNE BY THE CONTRACTOR.
   B. CONSTRUCT BOTTOM HALF OF ABUTMENT FOOTING AS SHOWN ON THE PLANS.
   C. PRIOR TO POURING TOP HALF OF ABUTMENT FOOTING, APPLY EPOXY BONDING ADHESIVE TO THE CONCRETE SURFACE.
9. PLACEMENT OF REINFORCING TIES IN EXISTING ARCH BEAMS:
   A. PLACEMENT OF REINFORCING TIES SHALL BE SUCH THAT THE BEND IN THE TIES ARE IN CONTACT WITH THE MAIN REINFORCING BARS OF THE ARCH BEAM. REFER TO "TYPICAL TIE DETAIL" A/S-16 FOR CLARIFICATION.
   B. ONLY TWO (2) ADJACENT FACES OF EXISTING ARCH BEAMS SHALL BE DRILLED AT A TIME FOR DRILL AND EPOXY PLACEMENT OF REINFORCING TIES.
   C. DRILLED HOLES IN EXISTING ARCH BEAMS SHALL BE CLEANED, FILLED WITH EPOXY, AND REINFORCING TIES SET IN PLACE WITHIN AN EIGHT (8) HOUR WORK DAY.
10. DEMOLITION OF EXISTING SIDEWALK AND RAILINGS:
   A. REMOVAL OF EXISTING SIDEWALK AND RAILINGS SHALL BE AS SHOWN ON THE DRAWINGS.
   B. PRIOR TO REMOVAL OF EXISTING SIDEWALK AND RAILINGS OVER ARCH BEAM PORTION OF BRIDGE, EXISTING END GIRDERS AND ADJACENT DECK SLABS SHALL BE SHORED. SHORING MAY BE FROM NEW BUILT-UP ARCH BEAMS BELOW AND SHALL REMAIN UNTIL COMPLETION OF NEW WIDENED DECK.
   C. EXISTING SIDEWALK AND RAILINGS AT ABUTMENT ENDS OF BRIDGE SHALL NOT BE REMOVED UNTIL ABUTMENT BACKFILL HAS BEEN COMPLETED.
11. FOUNDATION:
   THESE FOUNDATION NOTES WERE BASED ON RECOMMENDATIONS CONTAINED IN A FOUNDATION INVESTIGATION REPORT BY ERNEST K. HIRATA & ASSOCIATES, INC. DATED JUNE 2, 1999. THE REPORT SHALL BE CONSIDERED AS PART OF THE CONSTRUCTION DOCUMENTS AND ITS RECOMMENDATIONS SHALL BE IMPLEMENTED UNLESS OTHERWISE DIRECTED BY THE SOILS ENGINEER. CONTRACTOR MAY OBTAIN A COPY OF THE REPORT AT THE STATE OF HAWAII, DEPARTMENT OF TRANSPORTATION -HIGHWAYS DIVISION UPON REQUEST.
   A. DRILLED SHAFTS:
      1. THE VERTICAL BEARING LOAD CAPACITY FOR THE 48 INCHES DIAMETER DRILLED SHAFTS ARE FROM FRICTION BETWEEN THE SHAFT AND THE SURROUNDING SOIL AND BASALT. THE FOLLOWING NET VERTICAL BEARING LOAD PARAMETERS WERE USED FOR DESIGN:
         A. ABUTMENT FOOTINGS (DS-1):
            - STRENGTH LIMIT STATE = 2850 KIPS
            - EXTREME EVENT LIMIT STATE = 4400 KIPS
         B. WING WALL FOOTINGS (DS-2):
            - STRENGTH LIMIT STATE = 1500 KIPS
            - EXTREME EVENT LIMIT STATE = 2300 KIPS
      2. THE VERTICAL UPLIFT LOAD CAPACITY FOR THE 48 INCHES DIAMETER DRILLED SHAFTS ARE FROM FRICTION BETWEEN THE SHAFT AND THE SURROUNDING SOIL AND BASALT. THE FOLLOWING NET VERTICAL UPLIFT LOAD PARAMETERS WERE USED FOR DESIGN:
         A. ABUTMENT FOOTINGS (DS-1):
            - STRENGTH LIMIT STATE = -2400 KIPS
            - EXTREME EVENT LIMIT STATE = -4400 KIPS
         B. WING WALL FOOTINGS (DS-2):
            - STRENGTH LIMIT STATE = -1300 KIPS
            - EXTREME EVENT LIMIT STATE = -2300 KIPS
      3. THE FOLLOWING LATERAL LOAD CAPACITIES FOR 48 INCH DRILLED SHAFTS (FIXED-HEAD CONDITION) WERE USED FOR DESIGN:
         A. ABUTMENT FOOTINGS (DS-1) = 320 KIPS
         B. WING WALL FOOTINGS (DS-2) = 208 KIPS
      4. THE DRILLED SHAFT ESTIMATED TIP ELEVATIONS SHOWN ON THE PLANS ARE BASED ON THE BORING DATA. THE ACTUAL TIP ELEVATIONS COULD CHANGE DUE TO VARYING SUBSURFACE CONDITIONS. SOILS ENGINEER OF RECORD SHALL BE PRESENT DURING THE DRILLING OPERATION TO DETERMINE THAT THE ACTUAL SUBSURFACE CONDITIONS ARE CONSISTENT WITH THE CONDITIONS ASSUMED FOR DESIGN. BASED ON THE RECOMMENDATIONS, THE TIP ELEVATIONS COULD CHANGE. THE CONTRACTOR SHALL MAKE PROVISIONS FOR EXTENSION OF THE REINFORCING STEEL CAGES FOR THE DRILLED SHAFTS TO ACCOUNT FOR VARIATIONS IN THE FINAL TIP ELEVATIONS.
      5. THE CONTRACTOR SHALL EXERCISE CARE IN DRILLING THE SHAFT HOLES AND IN PLACING CONCRETE INTO THE HOLES. ROCK DRILLING/CORING EQUIPMENT WILL BE REQUIRED FOR DRILLED SHAFTS EXTENDING THROUGH HARD BASALT LAYERS. TEMPORARY CASING MAY BE NEEDED TO REDUCE THE POTENTIAL FOR CAVING IN OF THE HOLES. THE USE OF PERMANENT CASING WILL NOT BE ALLOWED.
      6. DRILLING SHALL NOT BE CONDUCTED BY METHODS UTILIZING DRILLING FLUIDS.
      7. CONCRETE FOR DRILLED SHAFTS SHALL BE PLACED WITHIN 24 HOURS AFTER DRILLING TO REDUCE THE POTENTIAL FOR CAVING IN. DRILLED SHAFTS SHALL BE POURED IN ONE CONTINUOUS LIFT.
      8. IF WATER IS ENCOUNTERED IN THE DRILLED HOLES, PLACEMENT OF CONCRETE SHALL BE BY TREMIE METHODS. A MINIMUM OF 5 FEET OF CONCRETE HEAD SHALL BE MAINTAINED ABOVE THE BOTTOM OF THE TREMIE PIPE DURING PLACEMENT OF CONCRETE.
   B. ABUTMENTS AND WING WALLS:
      1. ACTIVE EARTH PRESSURE:
         A. FREESTANDING CONDITION:
            - CLAYEY SILT = 40 PCF
            - HIGHLY TO COMPLETELY WEATHERED BASALT = 25 PCF
            - MODERATELY TO SLIGHTLY WEATHERED BASALT = 20 PCF
         B. RESTRAINED CONDITION:
            - CLAYEY SILT = 55 PCF
            - HIGHLY TO COMPLETELY WEATHERED BASALT = 38 PCF
            - MODERATELY TO SLIGHTLY WEATHERED BASALT = 35 PCF
      2. PASSIVE EARTH PRESSURE:
         A. CLAYEY SILT = 300 PCF
         B. HIGHLY TO COMPLETELY WEATHERED BASALT = 420 PCF
         C. MODERATELY TO SLIGHTLY WEATHERED BASALT = 950 PCF
      3. BACKFILL AND STRUCTURAL FILL MATERIAL:
         A. IN AREAS TO RECEIVE FILL PLACEMENT, THE EXISTING GROUND SHALL FIRST BE SCARIFIED TO A DEPTH OF 6 INCHES, MOISTENED TO SLIGHTLY ABOVE THE OPTIMUM MOISTURE CONTENT, AND COMPACTED TO A MINIMUM 90 PERCENT COMPACTION AS DETERMINED BY AASHTO T-180.
         B. THE ONSITE CLAYEY SILT AND HIGHLY TO COMPLETELY WEATHERED BASALT MAY BE REUSED AS BACKFILL AND STRUCTURAL FILL PROVIDED ALL ROCK FRAGMENTS LARGER THAN 6 INCHES IN MAXIMUM DIMENSION ARE REMOVED PRIOR TO COMPACTION.
         C. IMPORTED GRANULAR STRUCTURAL FILL SHALL BE IN ACCORDANCE WITH REQUIREMENTS FOR STRUCTURAL BACKFILL MATERIAL A AS INDICATED IN SECTION 703.20 OF THE HAWAII STANDARD SPECIFICATIONS FOR ROAD, BRIDGE AND PUBLIC WORKS CONSTRUCTION, 1994 AND THE SPECIAL PROVISIONS.
         D. FILL PLACEMENT SHALL BE IN ACCORDANCE WITH THE HAWAII STANDARD SPECIFICATIONS FOR ROAD, BRIDGE AND PUBLIC WORKS CONSTRUCTION, 1994 AND THE SPECIAL PROVISIONS.

ORIGINAL PLAN	SURVEY PLOTTED BY	DATE
	DRAWN BY	
	TRACED BY	
NOTE BOOK	DESIGNED BY	
	QUANTITIES BY	
No.	CHECKED BY	

GEORGE K. NISHIMURA
LICENSED PROFESSIONAL ENGINEER
No. 1385-S
HAWAII, U.S.A.

THIS WORK WAS PREPARED BY ME OR UNDER MY SUPERVISION.

STATE OF HAWAII
DEPARTMENT OF TRANSPORTATION
HIGHWAYS DIVISION

STRUCTURAL NOTES

HAWAII BELT ROAD
KUPAPAULUA BRIDGE WIDENING
HAMAKUA DISTRICT
Federal Aid Project No. BR-019-2(38)

SCALE: AS NOTED DATE: OCT., 2001

SHEET No. S-2 OF 30 SHEETS

FED. ROAD DIST. NO.	STATE	FED. AID PROJ. NO.	FISCAL YEAR	SHEET NO.	TOTAL SHEETS
HAWAII	HAW.	BR-019-2(38)	2002	ADD. 46	73

CONSTRUCTION SEQUENCE

1. REMOVE EXISTING A.C. PAVEMENT BY COLD-PLANING AND VERIFY EXISTING CONCRETE BRIDGE DECK GRADES. CONTRACTOR SHALL SUBMIT EXISTING GRADES TO THE ENGINEER SO THAT FINAL FINISH GRADES MAY BE VERIFIED.
2. CONSTRUCT DRILLED SHAFTS.
3. CONSTRUCT CURTAIN WALLS AND BACKFILL TO BOTTOM OF ABUTMENT FOOTINGS.
4. CONSTRUCT ABUTMENT FOOTINGS.
   A. CONSTRUCTION OF ABUTMENT FOOTINGS SHALL BE AS INDICATED IN THE STRUCTURAL NOTES-8.
5. CONSTRUCT WING WALL FOOTINGS.
6. CONSTRUCT ABUTMENT WALLS, WING WALLS, AND SERVICE STAIRS CONCURRENTLY WITH THE PLACEMENT OF CONCRETE BACKFILL.
   A. AT NO TIME SHALL ABUTMENT AND WING WALLS BE MORE THAN 6'-0" ABOVE THE CONCRETE BACKFILL.
   B. THREADED ROD TIE BACKS IN WING WALLS SHALL BE INSTALLED PRIOR TO PLACEMENT OF CONCRETE BACKFILL.
   C. DRAINAGE BLANKETS SHALL BE PROVIDED BETWEEN THE LOW-DENSITY CONCRETE BACKFILL AND THE BENCHED CUT-SLOPE.
   D. LOW-DENSITY CONCRETE BACKFILL SHALL BE POURED AT A MAXIMUM RATE OF 3'-0" PER DAY.
   E. TOP 2'-0" OF CLASS A CONCRETE BACKFILL SHALL BE POURED 120 DAYS AFTER LAST POUR OF LOW-DENSITY CONCRETE BACKFILL.
7. CONSTRUCT BUILT-UP ARCH BEAMS.
   A. PLACEMENT OF REINFORCING TIES IN EXISTING ARCH BEAMS SHALL BE AS INDICATED IN STRUCTURAL NOTES-9.
   B. CONSTRUCTION WORK ON ARCH BEAMS SHALL BE IN THE FOLLOWING CONCRETE POUR SEQUENCE:

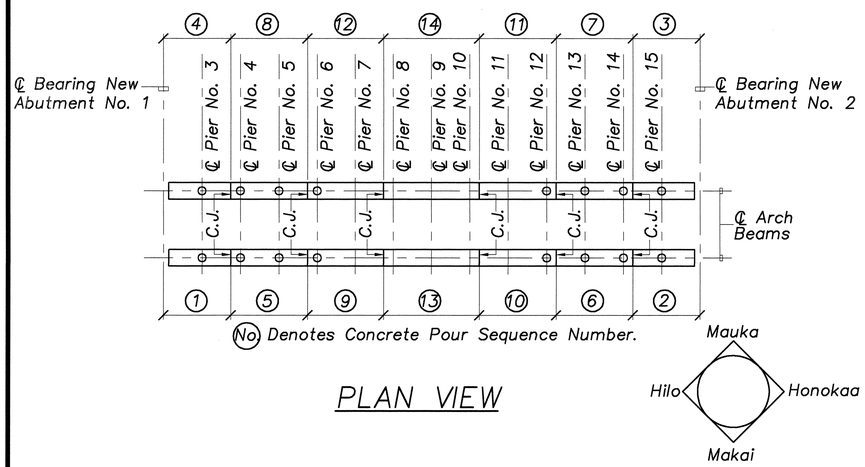

PLAN VIEW

   C. CONCRETE POURS SHALL BE TO CONSTRUCTION JOINT (C.J.) AS SHOWN ON SHEET S-17.
   D. CONSECUTIVE CONCRETE POUR SEQUENCES MAY BE COMBINED. HOWEVER, PREVIOUSLY PLACED CONCRETE SHALL BE ALLOWED TO CURE FOR A MINIMUM OF 24 HOURS PRIOR TO COMING INTO CONTACT WITH NEW FRESH CONCRETE.
8. CONSTRUCT BUILT-UP COLUMNS.
9. CONSTRUCT EXTENDED BEAMS.
   A. CONSTRUCTION OF BEAMS SHALL BE TO CONSTRUCTION JOINT (C.J.) AS SHOWN ON SHEET S-21.
10. CONSTRUCT NEW DECK SLAB ON "MAKAI SIDE."
   A. DEMOLITION OF EXISTING SIDEWALK AND RAILINGS SHALL BE AS SHOWN ON THE "EXISTING BRIDGE DEMOLITION PLANS" ON SHEET S-5 AND S-6. REFER TO STRUCTURAL NOTES-10 FOR CONSTRUCTION REQUIREMENTS PRIOR TO DEMOLITION.
   B. CONSTRUCTION WORK ON NEW WIDENED PORTION OF SLAB SHALL BE IN THE FOLLOWING SEQUENCE:

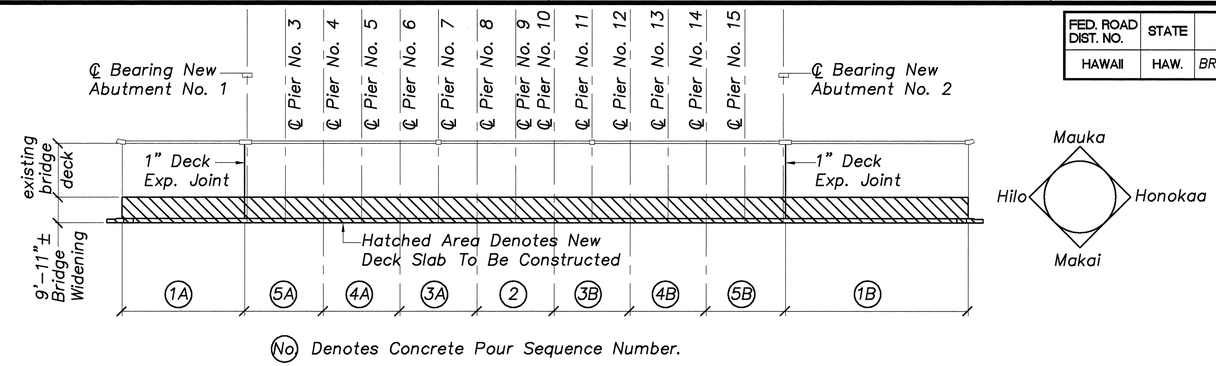

(No) Denotes Concrete Pour Sequence Number.

PLAN VIEW

   C. MINIMUM TIME INTERVAL BETWEEN CONCRETE POUR SEQUENCES SHALL BE 24 HOURS.
11. CONSTRUCT CONCRETE PARAPET, METAL RAIL, AND END POSTS ON "MAKAI SIDE."
12. CONSTRUCT NEW DECK SLAB ON "MAUKA SIDE."
   A. DEMOLITION OF EXISTING RAILINGS SHALL BE AS SHOWN ON THE "EXISTING BRIDGE DEMOLITION PLANS" ON SHEET S-5 AND S-6. REFER TO STRUCTURAL NOTES-10 FOR CONSTRUCTION REQUIREMENTS PRIOR TO DEMOLITION.
   B. CONSTRUCTION WORK ON NEW WIDENED PORTION OF SLAB SHALL BE IN THE FOLLOWING SEQUENCE:

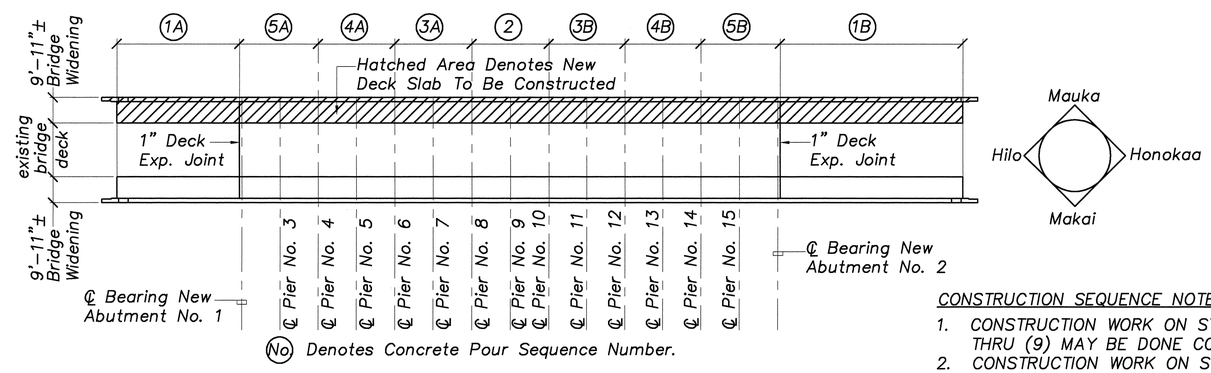

PLAN VIEW

   C. MINIMUM TIME INTERVAL BETWEEN CONCRETE POUR SEQUENCES SHALL BE 24 HOURS.
13. CONSTRUCT CONCRETE PARAPET, METAL RAIL, AND END POSTS ON "MAUKA SIDE."
14. CONSTRUCT NEW CONCRETE TOPPING.
   A. PRIOR TO PLACEMENT OF NEW CONCRETE TOPPING, APPLY EPOXY BONDING ADHESIVE TO EXISTING SURFACE.
   B. NEW CONCRETE TOPPING SHALL BE POURED IN THE FOLLOWING SEQUENCE:

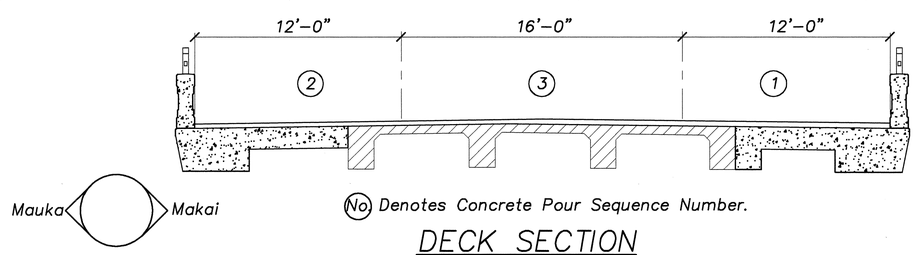

(No) Denotes Concrete Pour Sequence Number.

DECK SECTION

15. INSTALL NEW DECK EXPANSION JOINTS AT NEW ABUTMENT NO. 1 AND NO. 2. REFER TO SHEET S-27 FOR DETAILS.

CONSTRUCTION SEQUENCE NOTES:

1. CONSTRUCTION WORK ON STEP (6) AND STEPS (7) THRU (9) MAY BE DONE CONCURRENTLY.
2. CONSTRUCTION WORK ON STEP (10) SHALL NOT BEGIN UNTIL STEPS (1) THRU (9) HAVE BEEN COMPLETED.
3. NEW DECK SLAB AND CONCRETE TOPPING SHALL NOT BE OPEN TO TRAFFIC UNTIL CONCRETE HAS ATTAINED ITS DESIGN STRENGTH, BUT NOT LESS THAN 7 DAYS.
4. IN STEPS (10B) AND (12B), CONCRETE POUR SEQUENCE "A" AND "B" MAY BE DONE SEPARATELY, OR TOGETHER. HOWEVER, BOTH "A" AND "B" MUST BE COMPLETED BEFORE PROCEEDING TO THE NEXT POUR SEQUENCE NUMBER.

DATE	REVISION
4/15/02	REVISED BRIDGE WIDENING DIMENSION ON "PLAN VIEW" AT STAGES 10 AND 12.

GEORGE K. NISHIKUBA LICENSED PROFESSIONAL ENGINEER No. 1388-S HAWAII, U.S.A.

THIS WORK WAS PREPARED BY ME OR UNDER MY SUPERVISION

04/30/04
Expiration Date of Professional License

STATE OF HAWAII
DEPARTMENT OF TRANSPORTATION
HIGHWAYS DIVISION

CONSTRUCTION SEQUENCE

HAWAII BELT ROAD
KUPAPAULUA BRIDGE WIDENING
HAMAKUA DISTRICT
Federal Aid Project No. BR-019-2(38)

SCALE: AS NOTED DATE: AUG., 2001

SHEET No. S-3 OF 30 SHEETS

ADD. 46

ORIGINAL PLAN | NOTE BOOK | No. | SURVEY PLOTTED BY | DRAWN BY | TRACED BY | DESIGNED BY | QUANTITIES BY | CHECKED BY | DATE

FED. ROAD DIST. NO.	STATE	FED. AID PROJ. NO.	FISCAL YEAR	SHEET NO.	TOTAL SHEETS
HAWAII	HAW.	BR-019-2(38)	2002	47	73

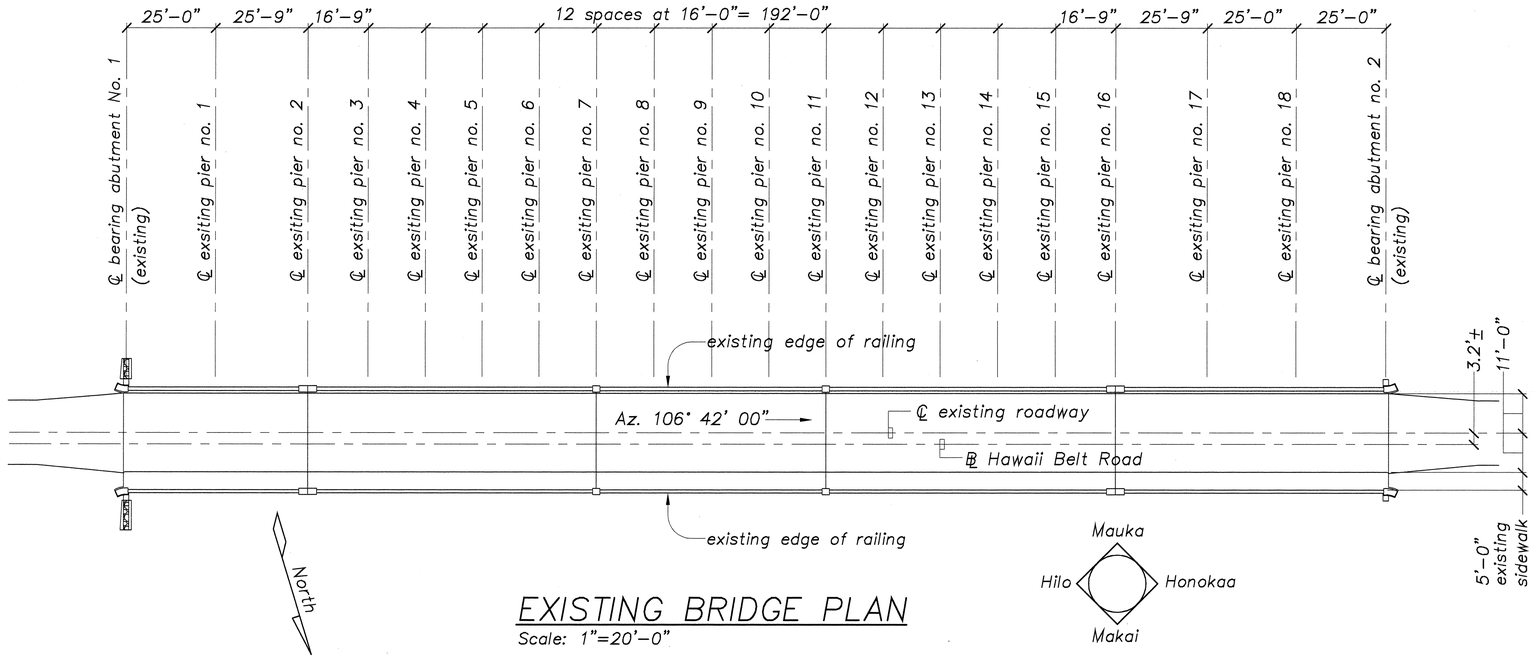

EXISTING BRIDGE PLAN

Scale: 1"=20'-0"

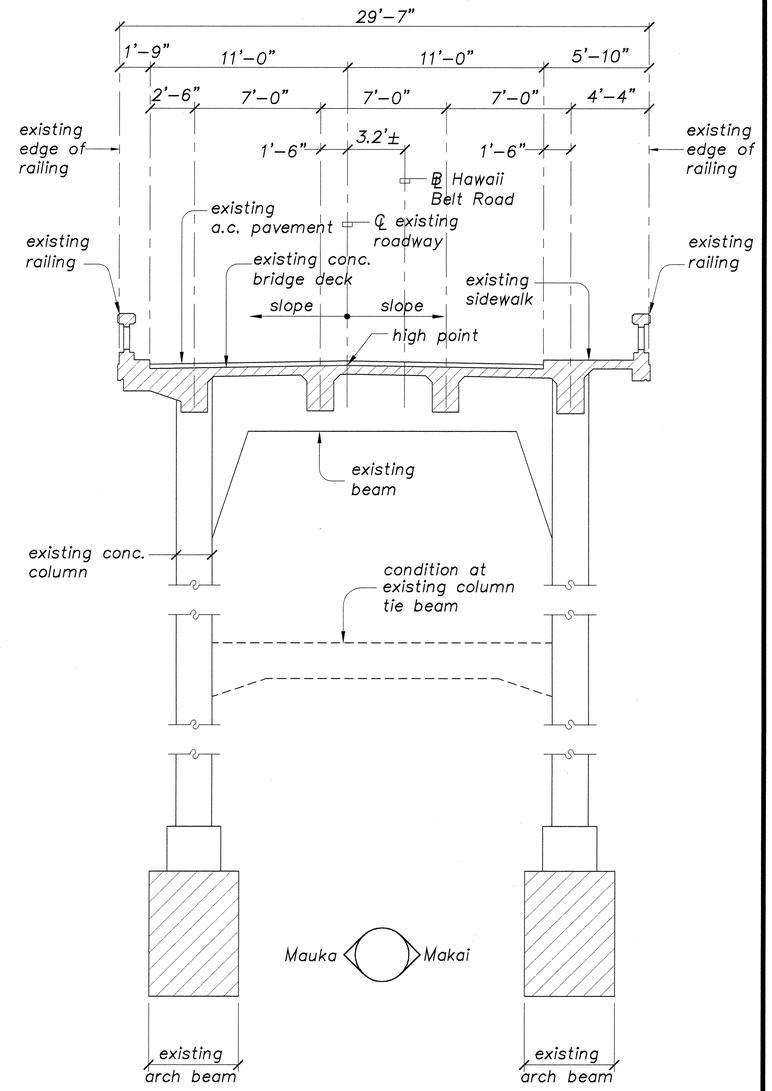

TYPICAL SECTION THRU ARCH

Scale: 1/4"=1'-0"

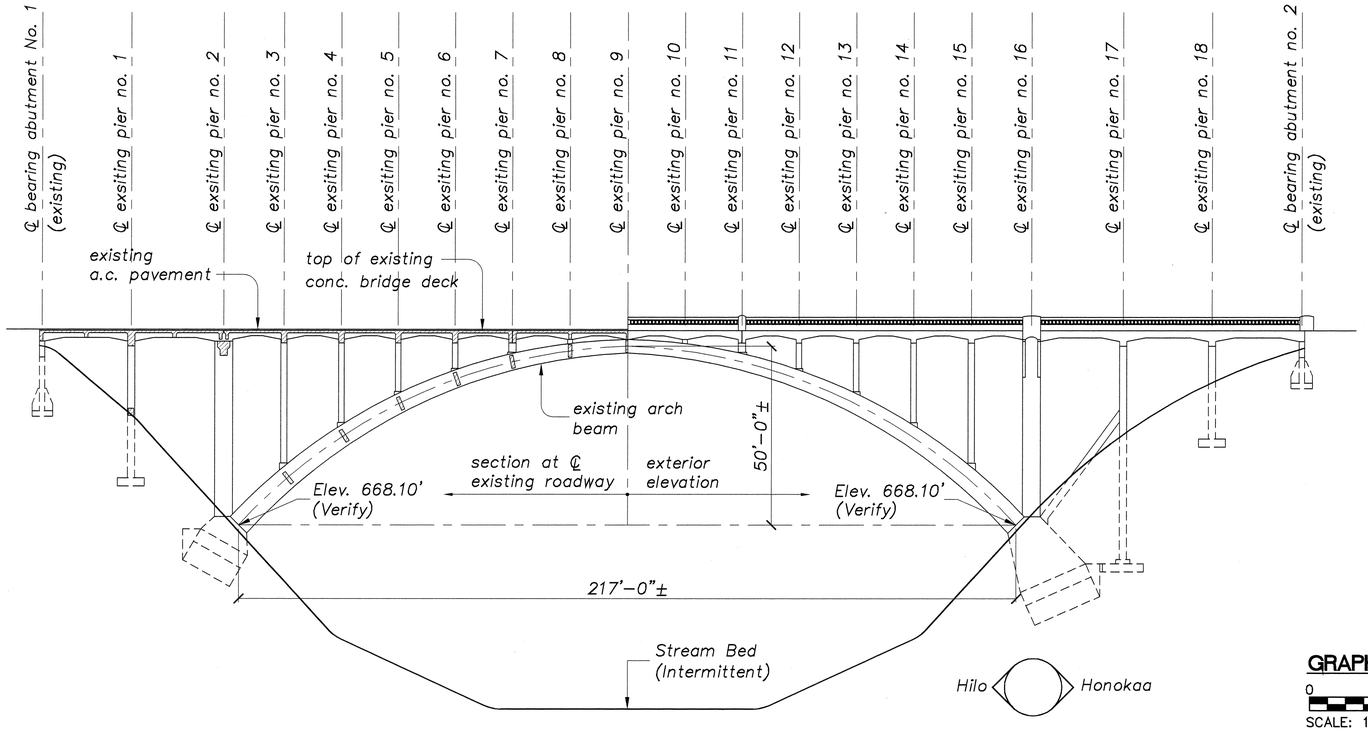

EXISTING BRIDGE HALF SECTION / ELEVATION

Scale: 1"=20'-0"

GRAPHIC SCALES

0 20' 40' 60'
SCALE: 1" = 20'-0"

0 4' 8' 12'
SCALE: 1/4" = 1'-0"

ORIGINAL PLAN	SURVEY PLOTTED BY:	DATE
	DRAWN BY:	
NOTE BOOK	TRACED BY:	
	DESIGNED BY:	
No.	QUANTITIES BY:	
	CHECKED BY:	

GEORGE K. NISHIMURA LICENSED PROFESSIONAL ENGINEER No. 1388-S HAWAII, U.S.A.

THIS WORK WAS PREPARED BY ME OR UNDER MY SUPERVISION.

STATE OF HAWAII
DEPARTMENT OF TRANSPORTATION
HIGHWAYS DIVISION

EXISTING BRIDGE PLAN, EXISTING BRIDGE HALF SECTION/ELEVATION, TYPICAL SECTION THRU ARCH

HAWAII BELT ROAD
KUPAPAULUA BRIDGE WIDENING
HAMAKUA DISTRICT
Federal Aid Project No. BR-019-2(38)

SCALE: AS NOTED DATE: OCT., 2001

SHEET No. S-4 OF 30 SHEETS

FED. ROAD DIST. NO.	STATE	FED. AID PROJ. NO.	FISCAL YEAR	SHEET NO.	TOTAL SHEETS
HAWAII	HAW.	BR-019-2(38)	2002	48	73

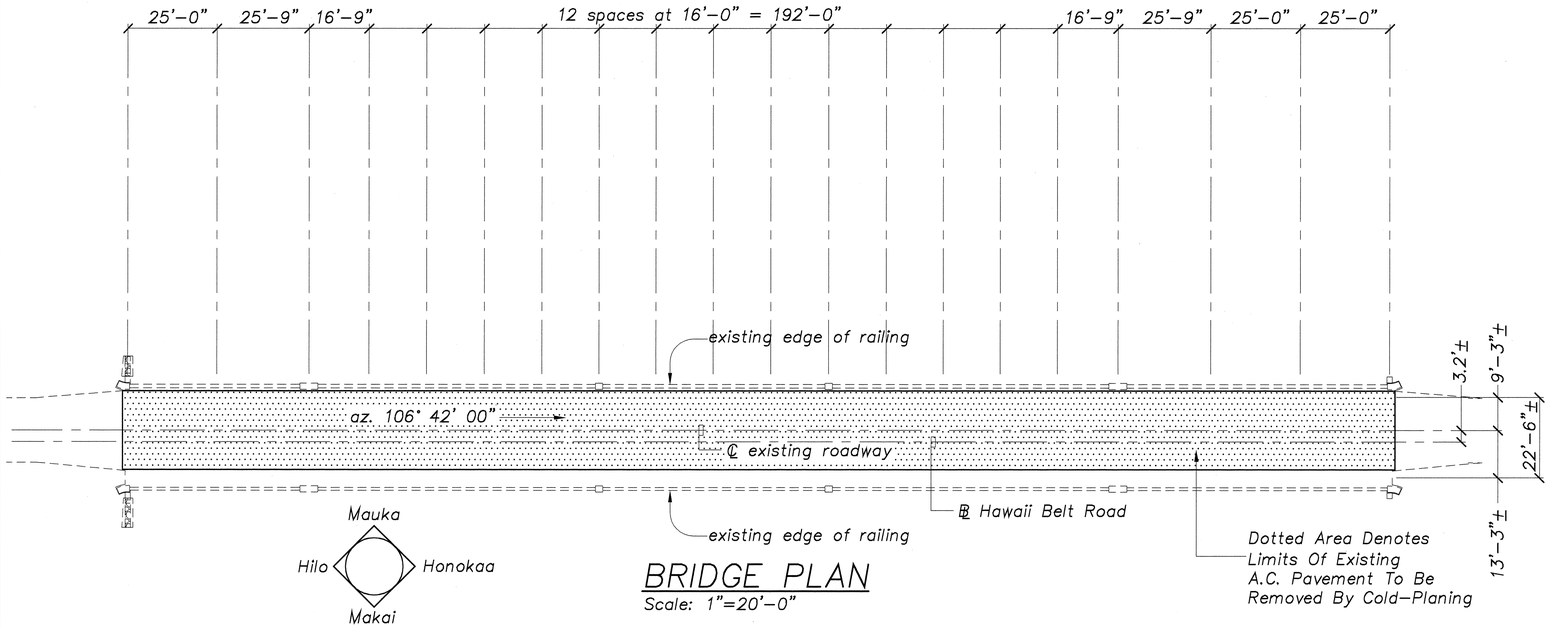

BRIDGE PLAN

Scale: 1"=20'-0"

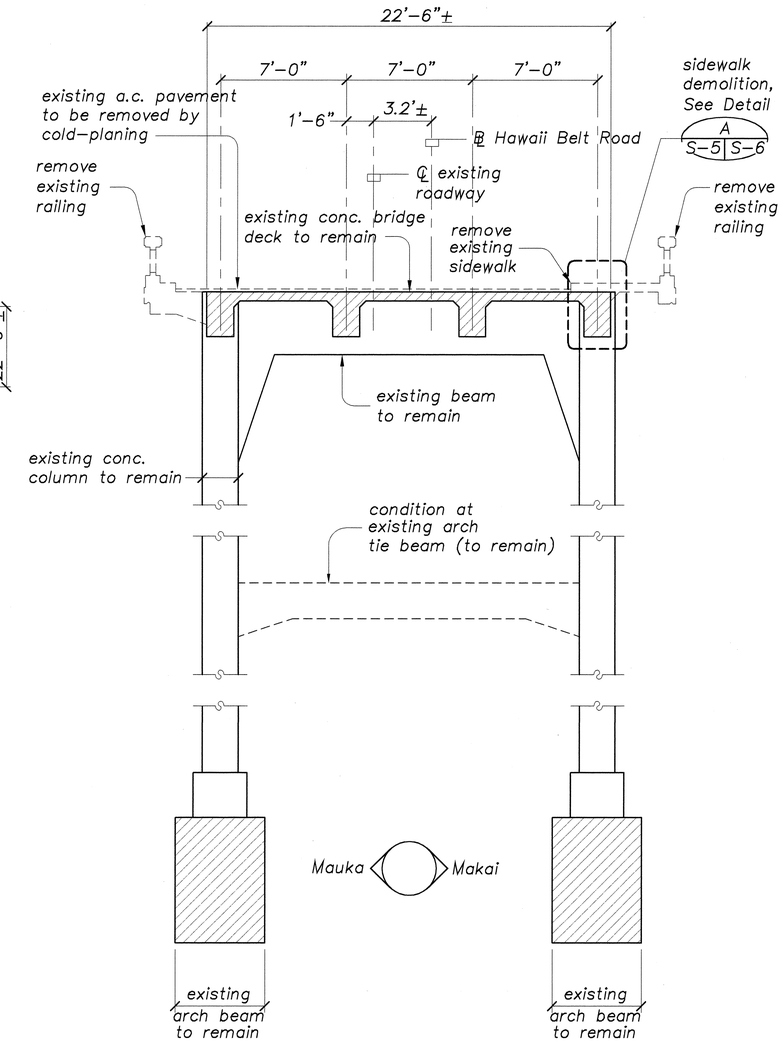

TYPICAL SECTION

Scale: 1/4"=1'-0"

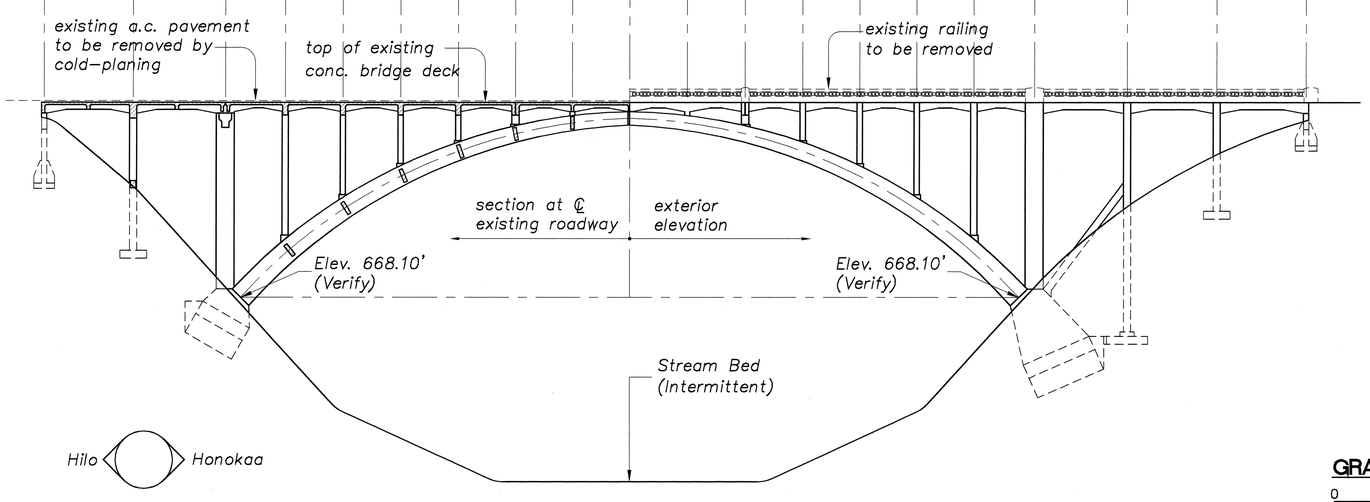

BRIDGE HALF SECTION / ELEVATION

Scale: 1"=20'-0"

GRAPHIC SCALES

0 20' 40' 60'
SCALE: 1" = 20'-0"

0 4' 8' 12'
SCALE: 1/4" = 1'-0"

GEORGE K. NISHIMURA
LICENSED PROFESSIONAL ENGINEER
No. 1388-S
HAWAII, U.S.A.

THIS WORK WAS PREPARED BY ME OR UNDER MY SUPERVISION.

STATE OF HAWAII
DEPARTMENT OF TRANSPORTATION
HIGHWAYS DIVISION

EXISTING BRIDGE DEMOLITION PLANS

HAWAII BELT ROAD
KUPAPAULUA BRIDGE WIDENING
HAMAKUA DISTRICT
Federal Aid Project No. BR-019-2(38)

SCALE: AS NOTED DATE: OCT., 2001

SHEET No. S-5 OF 30 SHEETS

ORIGINAL PLAN		
NOTE BOOK		
No.		

SURVEY PLOTTED BY
DRAWN BY
TRACED BY
DESIGNED BY
QUANTITIES BY
CHECKED BY
DATE

FED. ROAD DIST. NO.	STATE	FED. AID PROJ. NO.	FISCAL YEAR	SHEET NO.	TOTAL SHEETS
HAWAII	HAW.	BR-019-2(38)	2002	49	73

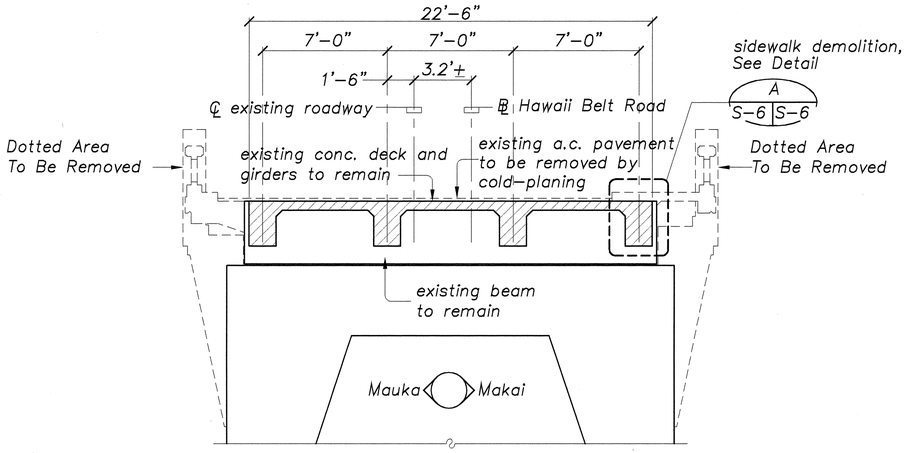

EXISTING PIER NO. 2 AND EXISTING PIER NO. 16

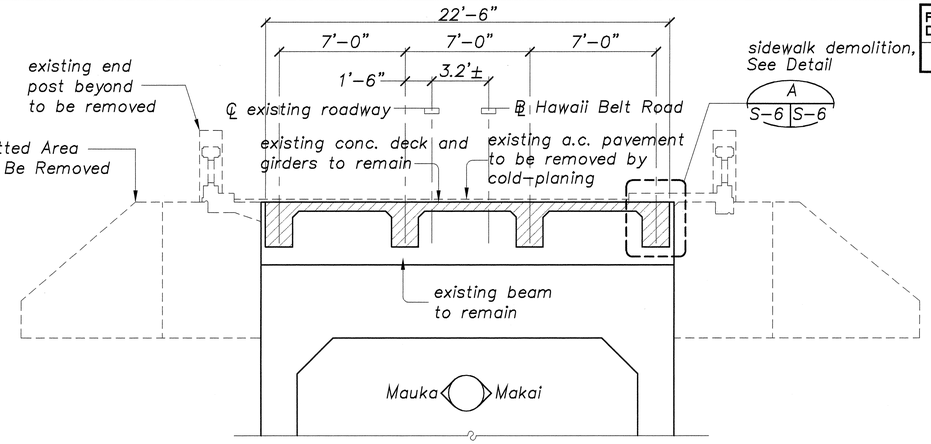

EXISTING ABUTMENT NO. 1

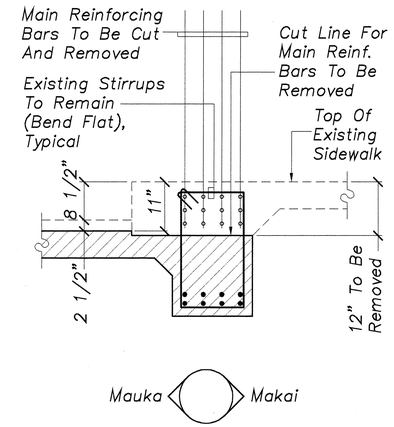

B
S-6 S-6

SECTION

Scale: 3/4"=1'-0"

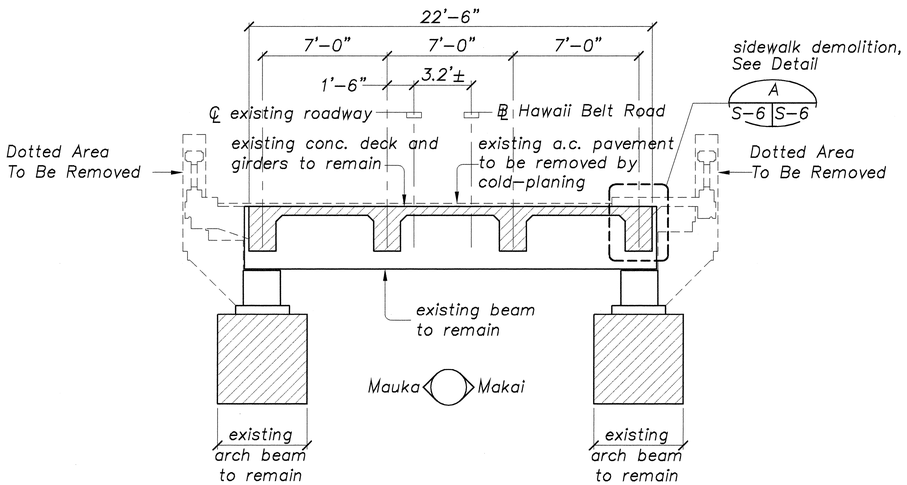

EXISTING PIER NO. 7 AND EXISTING PIER NO. 11

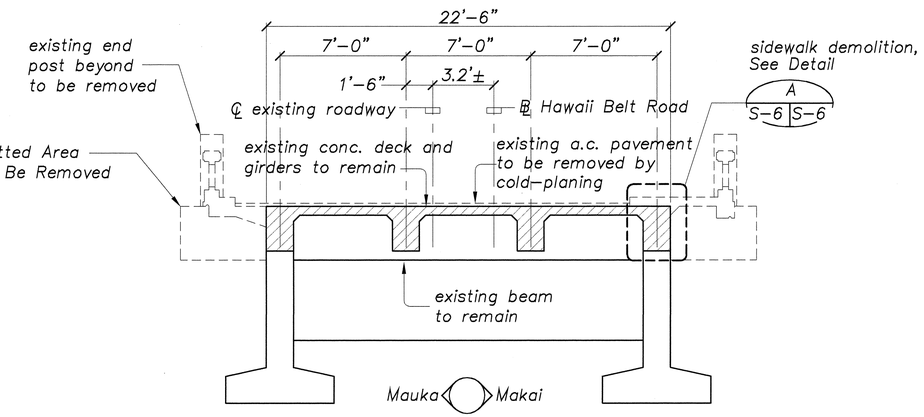

EXISTING ABUTMENT NO. 2

DEMOLITION CROSS SECTIONS

Scale: 1/4"=1'-0"

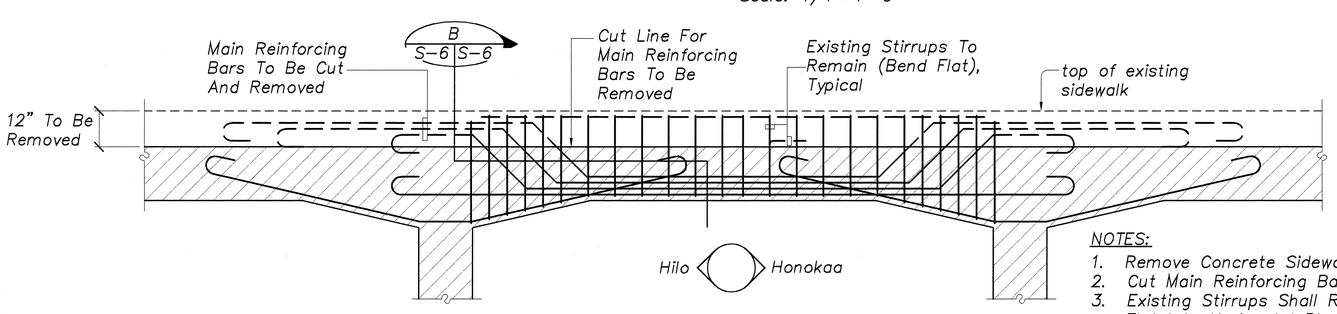

A
S-5, S-6 S-6

SIDEWALK DEMOLITION DETAIL

Scale: 1/2"=1'-0"

NOTES:

1. Remove Concrete Sidewalk To Cut Line As Shown.
2. Cut Main Reinforcing Bars At Cut Line.
3. Existing Stirrups Shall Remain And Shall Be Bent Flat Into Horizontal Plane.
4. Refer To "Structural Notes 10" For Additional Notes.
5. Reinforcing Overlapping From Adjoining Spans Not Shown.

GRAPHIC SCALES

0 4' 8' 12'
SCALE: 1/4" = 1'-0"

0 2' 4' 6'
SCALE: 1/2" = 1'-0"

0 1' 2' 3' 4'
SCALE: 3/4" = 1'-0"

GEORGE K. NISHIMURA
LICENSED PROFESSIONAL ENGINEER
No. 1388-S
HAWAII, U.S.A.

THIS WORK WAS PREPARED BY ME OR UNDER MY SUPERVISION.

STATE OF HAWAII
DEPARTMENT OF TRANSPORTATION
HIGHWAYS DIVISION

DEMOLITION CROSS SECTIONS, SIDEWALK DEMOLITION

HAWAII BELT ROAD
KUPAPAULUA BRIDGE WIDENING
HAMAKUA DISTRICT
Federal Aid Project No. BR-019-2(38)

SCALE: AS NOTED DATE: OCT., 2001

SHEET No. S-6 OF 30 SHEETS

ORIGINAL PLAN
NOTE BOOK No.
SURVEY PLOTTED BY
DRAWN BY
TRACED BY
DESIGNED BY
QUANTITIES BY
CHECKED BY
DATE

FED. ROAD DIST. NO.	STATE	FED. AID PROJ. NO.	FISCAL YEAR	SHEET NO.	TOTAL SHEETS
HAWAII	HAW.	BR-019-2(38)	2002	50A	79

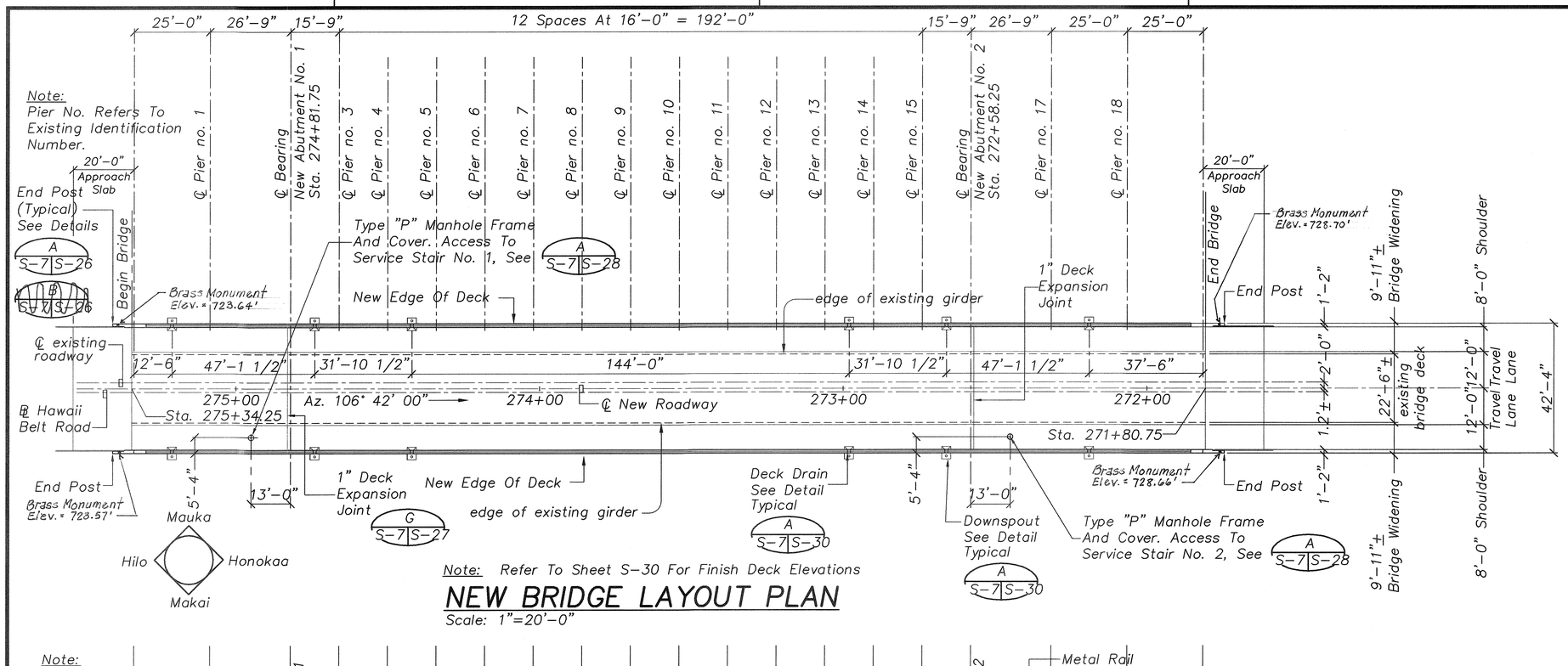

Note: Refer To Sheet S-30 For Finish Deck Elevations

NEW BRIDGE LAYOUT PLAN

Scale: 1"=20'-0"

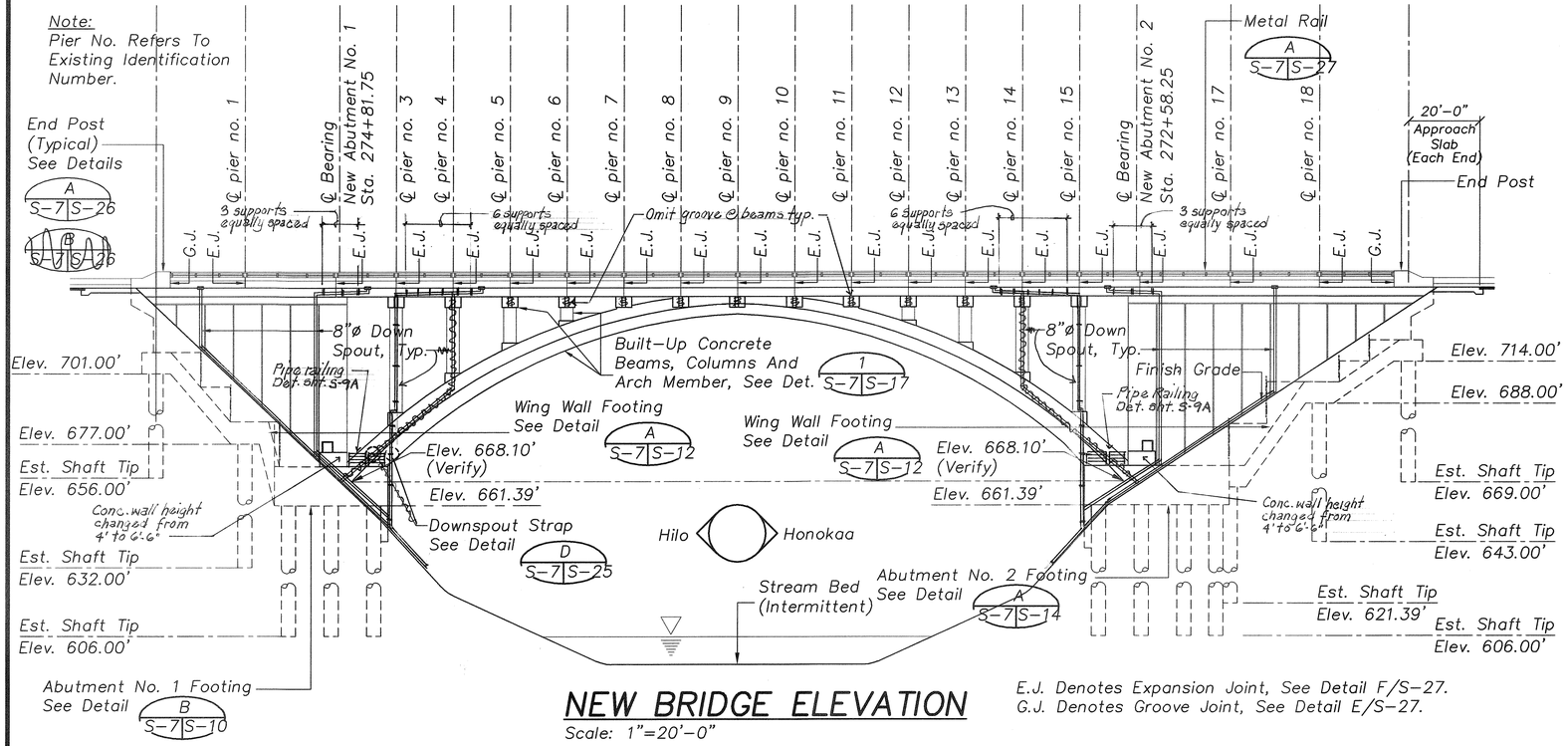

NEW BRIDGE ELEVATION

Scale: 1"=20'-0"

E.J. Denotes Expansion Joint, See Detail F/S-27.
G.J. Denotes Groove Joint, See Detail E/S-27.

100 Year Peak Flow = 5682 CFS
500 Year Peak Flow = 9659 CFS

100 Year Flood Elevation = 612.35'
500 Year Flood Elevation = 614.77'

GRAPHIC SCALES
0 20' 40' 60'
SCALE: 1" = 20'-0"

DATE	REVISION

STATE OF HAWAII
DEPARTMENT OF TRANSPORTATION
HIGHWAYS DIVISION

NEW BRIDGE LAYOUT PLAN, NEW BRIDGE ELEVATION
HAWAII BELT ROAD
KUPAPAULUA BRIDGE WIDENING
HAMAKUA DISTICT
Federal Aid Project No. BR-019-2(38)

Scale: As Noted Date: June 23, 2003

MYRON G. OKUBO LICENSED PROFESSIONAL ENGINEER No. 4320-S HAWAII, U.S.A.

THIS WORK WAS PREPARED BY ME OR UNDER MY SUPERVISION

Myron Okubo

SHEET No. S-7 OF 36 SHEETS

ORIGINAL PLAN	SURVEY PLOTTED BY	DATE
	DRAWN BY	
NOTEBOOK	TRACED BY	
	DESIGNED BY	
No.	QUANTITIES BY	
	CHECKED BY	

"AS-BUILT"

FED. ROAD DIST. NO.	STATE	FED. AID PROJ. NO.	FISCAL YEAR	SHEET NO.	TOTAL SHEETS
HAWAII	HAW.	BR-019-2(38)	2002	50A S-1	79

Note:
Pier No. Refers To Existing Identification Number.

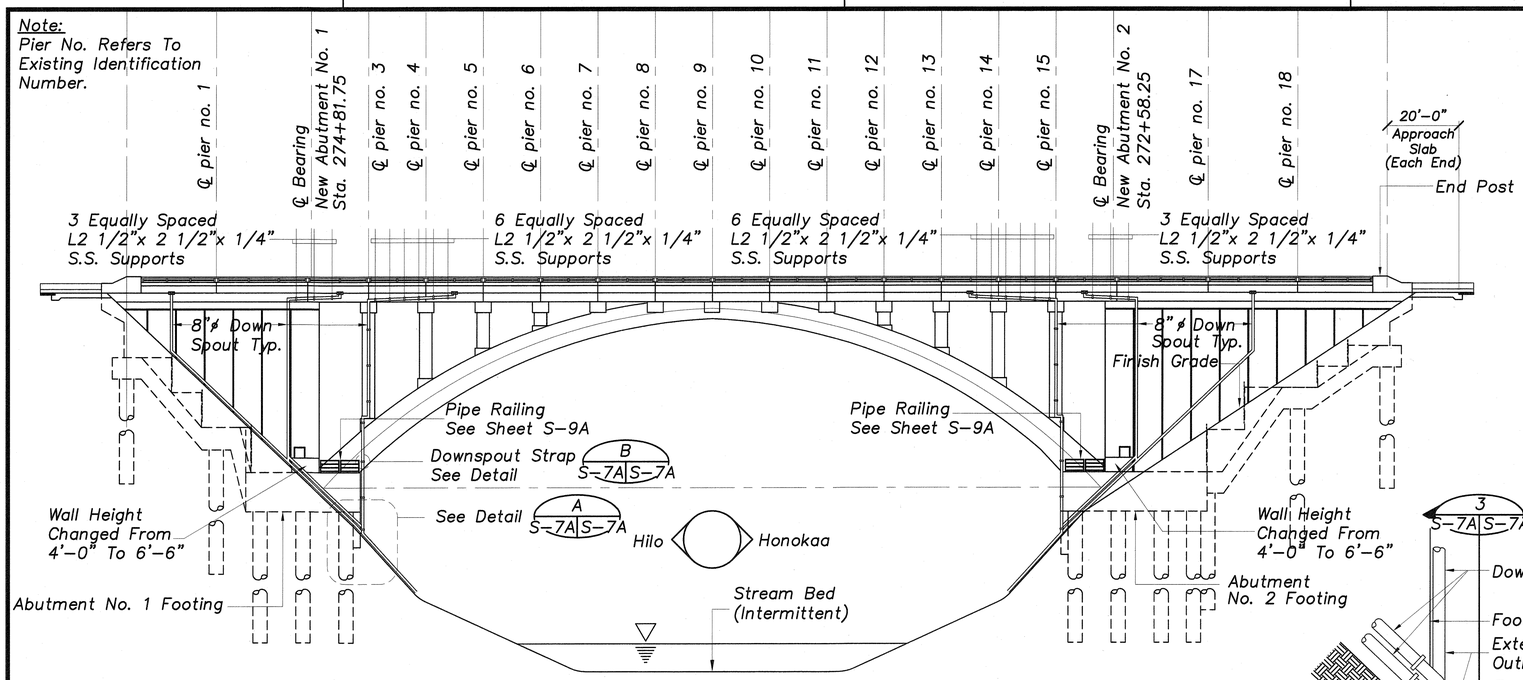

BRIDGE ELEVATION W/ DOWNSPOUTS

Scale: 1"=20'-0"

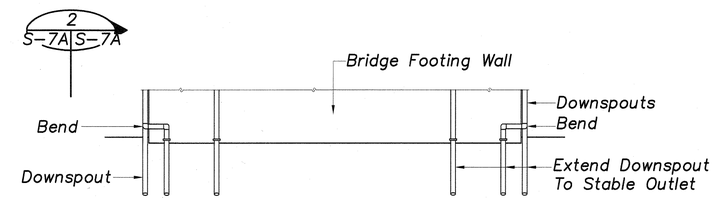

DOWNSPOUT ELEVATION

A S-7A S-7A Scale: 1"=10'-0"

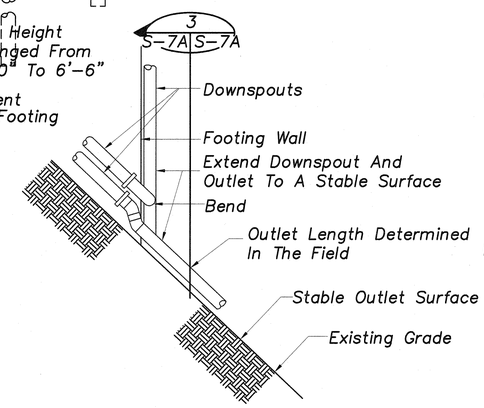

DETAIL

2 S-7A S-7A Scale: 1/4"=1'-0"

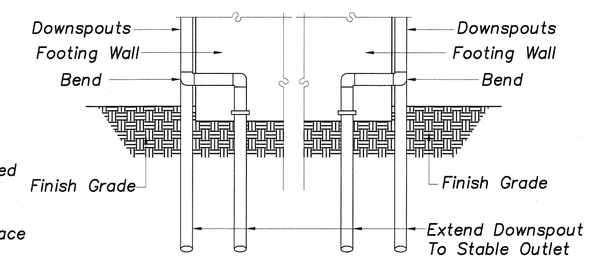

SECTION

3 S-7A S-7A Scale: 1/4"=1'-0"

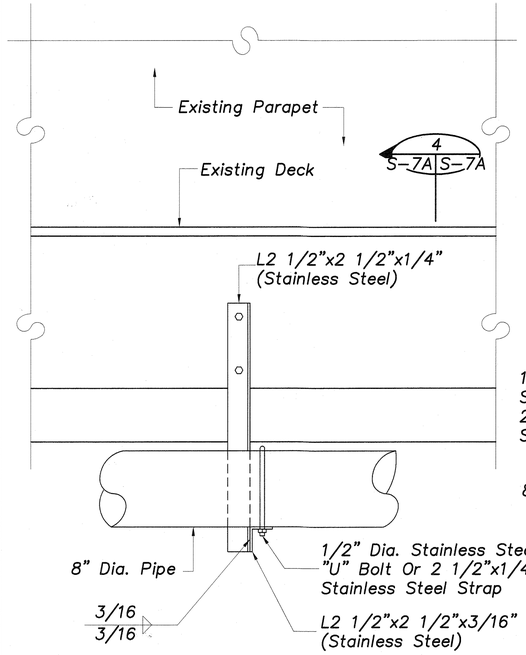

PIPE SUPPORT ELEVATION

C S-7A S-7A Scale: 1 1/2"=1'-0"

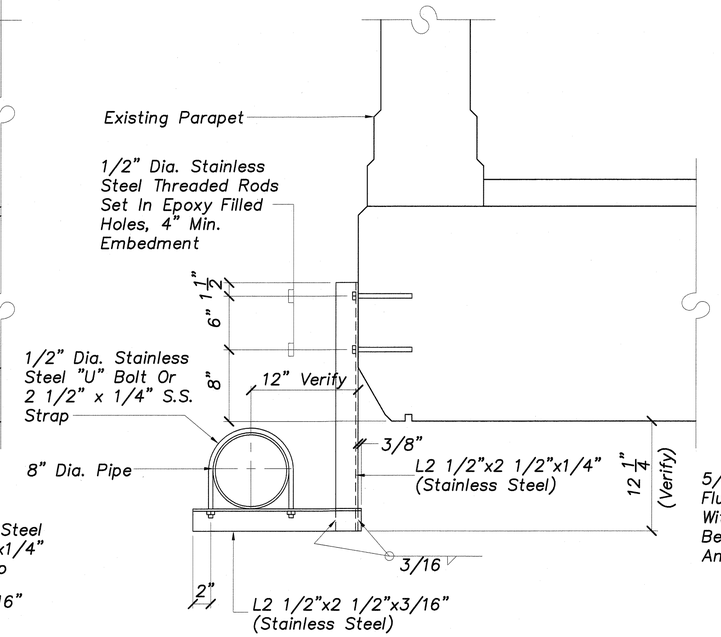

SECTION

4 S-7A S-7A Scale: 1 1/2"=1'-0"

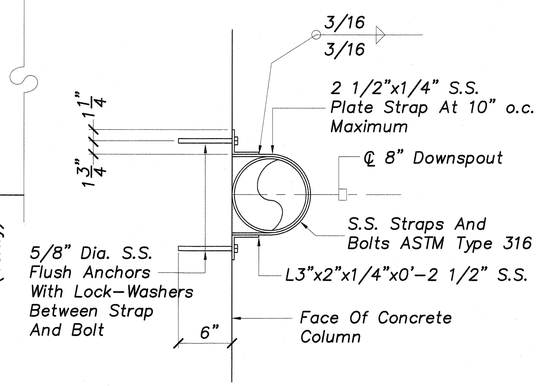

PLAN

STRAP AT DOWNSPOUT

B S-7A S-7A Scale: 1-1/2"=1'-0"

Note:
This Tracing Prepared During "As-Built" Posting.

GRAPHIC SCALES

0 20' 40' 60'
SCALE: 1" = 20'-0"

0 10' 20' 30'
SCALE: 1" = 10'-0"

0 4 8 12
SCALE: 1/4" = 1'-0"

0 1 2
SCALE: 1-1/2" = 1'-0"

DATE	REVISION

STATE OF HAWAII
DEPARTMENT OF TRANSPORTATION
HIGHWAYS DIVISION

DOWNSPOUT LAYOUT AND DETAILS

HAWAII BELT ROAD
KUPAPAULUA BRIDGE WIDENING
HAMAKUA DISTICT
Federal Aid Project No. BR-019-2(38)

Scale: As Noted Date: June 23, 2003

SHEET No. S-7A OF 36 SHEETS

ORIGINAL PLAN | SURVEY PLOTTED BY | DRAWN BY | TRACED BY | DESIGNED BY | QUANTITIES BY | CHECKED BY | DATE | NOTEBOOK | No.

"AS-BUILT"

FED. ROAD DIST. NO.	STATE	FED. AID PROJ. NO.	FISCAL YEAR	SHEET NO.	TOTAL SHEETS
HAWAII	HAW.	BR-019-2(38)	2002	51A	79

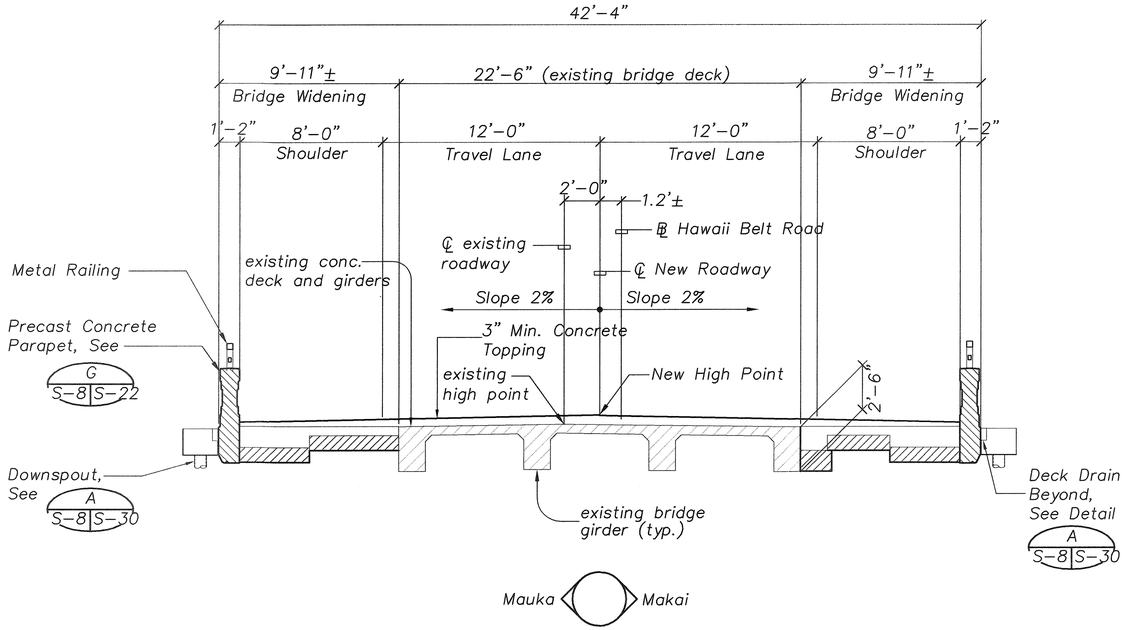

TYPICAL NEW DECK SECTION

Scale: 1/4"=1'-0"

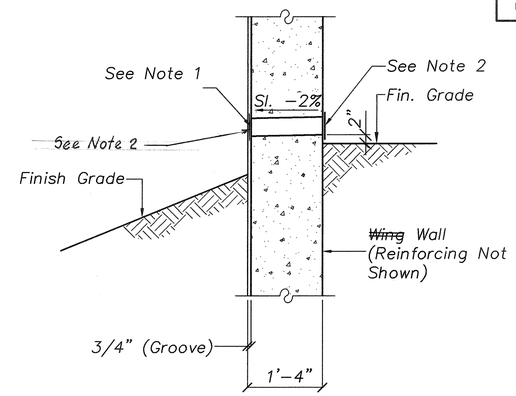

Notes:

1. Provide 4" Diameter PVC Pipe Drains at 8'-0" o.c.. Maximum 2" above Top of Abutment Footings in Abutment Walls. Adjust Reinforcing Bars, as Required, To Clear Drains.
2. 6" Square ~~Galvanized Steel Wire 1/4" Mesh Hardware Cloth (Minimum Wire Diameter 0.025")~~ #2 Non-domestic 304 stainless steel mesh. Anchor Firmly To ~~Back face~~ both face of ~~Wing~~ wall.

WEEPHOLE DETAIL

S-8, S-9, S-11, S-14 — A S-8

Scale: 3/4"=1'-0"

Note:
Pier No. Refers To Existing Identification Number.

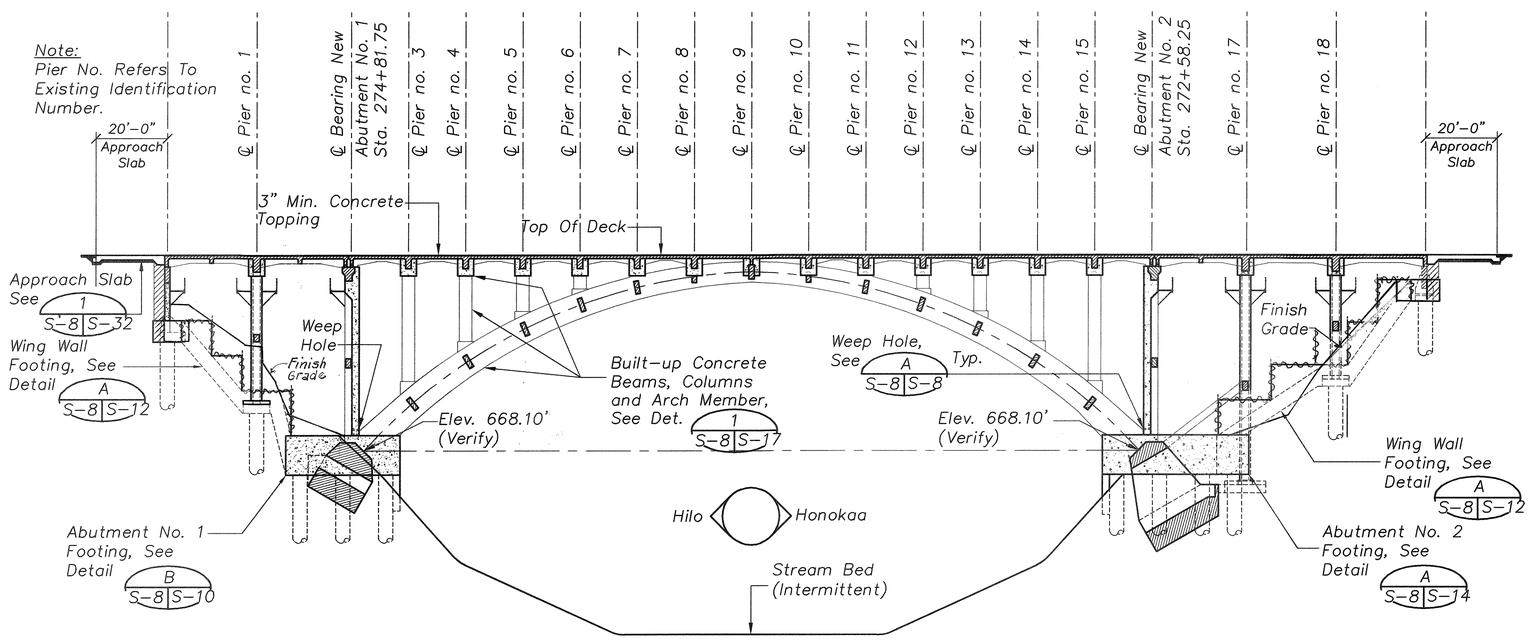

NEW BRIDGE SECTION AT ℄ NEW ROADWAY

Scale: 1"=20'-0"

GRAPHIC SCALES

0 4' 8' 12'
SCALE: 1/4" = 1'-0"

0 1' 2' 3' 4'
SCALE: 3/4" = 1'-0"

0 20' 40' 60'
SCALE: 1" = 20'-0"

DATE	REVISION

STATE OF HAWAII
DEPARTMENT OF TRANSPORTATION
HIGHWAYS DIVISION

NEW BRIDGE LONGITUDINAL SECTION, TYPICAL NEW DECK SECTION
HAWAII BELT ROAD
KUPAPAULUA BRIDGE WIDENING
HAMAKUA DISTICT
Federal Aid Project No. BR-019-2(38)

Scale: As Noted — Date: June 23, 2003

MYRON G. OKUBO LICENSED PROFESSIONAL ENGINEER No. 4320-S HAWAII, U.S.A.

THIS WORK WAS PREPARED BY ME OR UNDER MY SUPERVISION

Myron Okubo

SHEET No. S-8 OF 36 SHEETS

ORIGINAL PLAN | SURVEY PLOTTED BY | DRAWN BY | TRACED BY | DESIGNED BY | QUANTITIES BY | CHECKED BY | DATE
NOTEBOOK | No.

Path: L:\WOA\6670-01 Kupapaulua Bridge\Downsp Filename: S8 Plot date: Sep 25, 2006-07:50:18pm CAD User: skidani. Xref Filename: | Border | AUTODATE |

"AS-BUILT"

FED. ROAD DIST. NO.	STATE	FED. AID PROJ. NO.	FISCAL YEAR	SHEET NO.	TOTAL SHEETS
HAWAII	HAW.	BR-019-2(38)	2002	52A	79

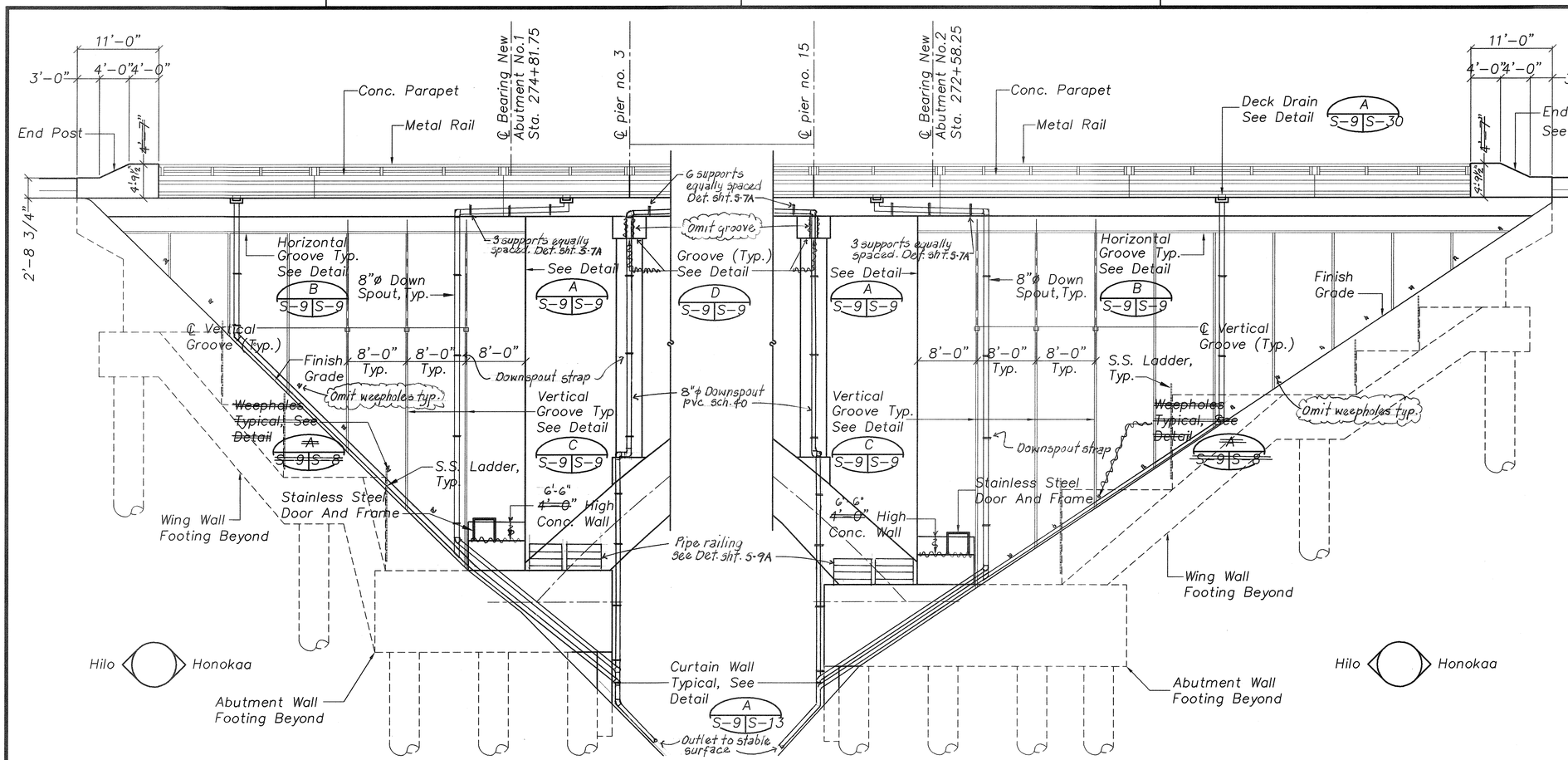

ABUTMENT NO. 1 / WING WALL MAKAI ELEVATION

Scale: 1/8"=1'-0" (Mauka Elevation Similar)

ABUTMENT NO. 2 / WING WALL MAKAI ELEVATION

Scale: 1/8"=1'-0" (Mauka Elevation Similar)

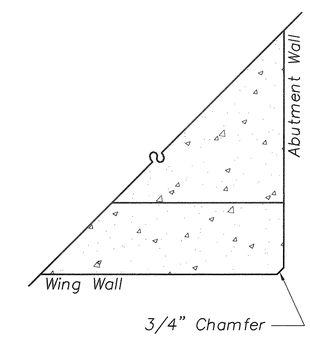

WALL CORNER DET.

S-9, A S-24 S-9 Scale: 1-1/2"=1'-0"

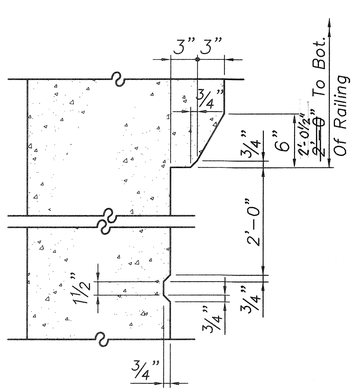

HORIZONTAL GROOVE DET.

S-9, S-25, B S-26 S-9 Scale: 1-1/2"=1'-0"

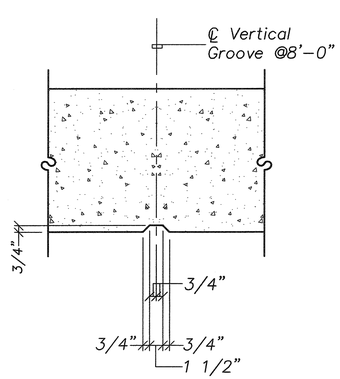

VERTICAL GROOVE DET.

S-9, C S-24 S-9 Scale: 1-1/2"=1'-0"

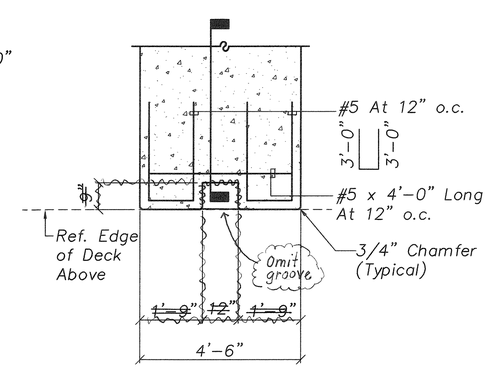

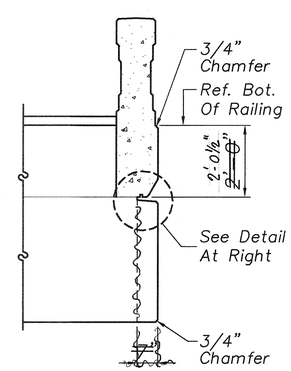

SECTION

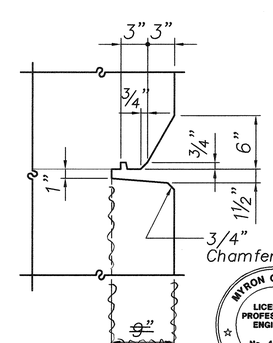

DETAIL

GROOVE DETAIL AT BEAM

S-9, D S-21 S-9 Scale: 1/2"=1'-0"

GRAPHIC SCALES

0 8' 16' 24'
SCALE: 1/8" = 1'-0"

0 2' 4' 6'
SCALE: 1/2" = 1'-0"

0 1' 2'
SCALE: 1-1/2" = 1'-0"

MYRON G. OKUBO LICENSED PROFESSIONAL ENGINEER No. 4320-S HAWAII, U.S.A.

THIS WORK WAS PREPARED BY ME OR UNDER MY SUPERVISION

Myron Okubo

DATE	REVISION

STATE OF HAWAII
DEPARTMENT OF TRANSPORTATION
HIGHWAYS DIVISION

ABUTMENT/WING WALL AND DETAILS
HAWAII BELT ROAD
KUPAPAULUA BRIDGE WIDENING
HAMAKUA DISTICT
Federal Aid Project No. BR-019-2(38)

Scale: As Noted Date: June 23, 2003

SHEET No. S-9 OF 36 SHEETS

ORIGINAL PLAN	SURVEY PLOTTED BY	DATE
	DRAWN BY	
NOTEBOOK	TRACED BY	
	DESIGNED BY	
No.	QUANTITIES BY	
	CHECKED BY	

Path: L:\WGA\6670-01 Kupapaulua Bridge\Downsp Filename: S9 Plot date: Sep 25, 2006-07:50:56pm CAD User: skidani, Xref Filename: | Border | AUTODATE |

FED. ROAD DIST. NO.	STATE	FED. AID PROJ. NO.	FISCAL YEAR	SHEET NO.	TOTAL SHEETS
HAWAII	HAW.	BR-019-2(38)	2002	52A S-1	79

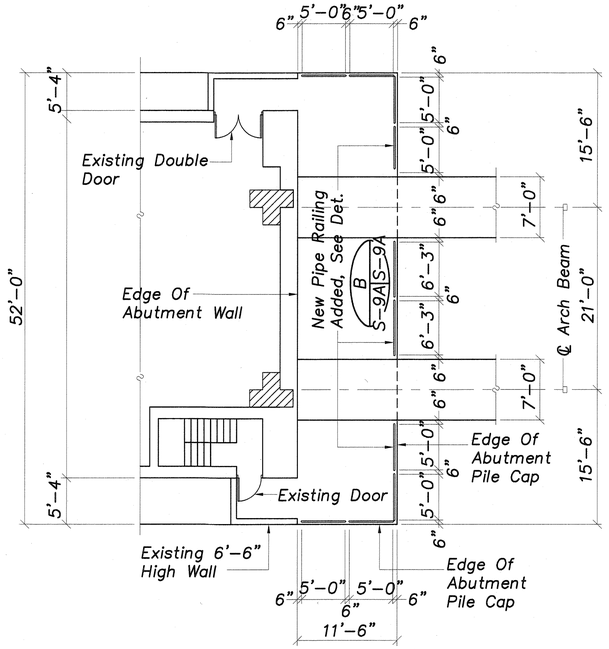

A
S-7 S-9A
S-7A
S-9

NEW RAILING AT ABUTMENT PILE CAP PLAN

Scale: 1/8"=1'-0"

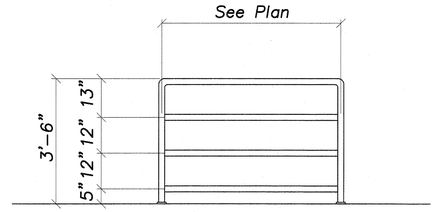

ELEVATION

Scale: 1/2"=1'-0"

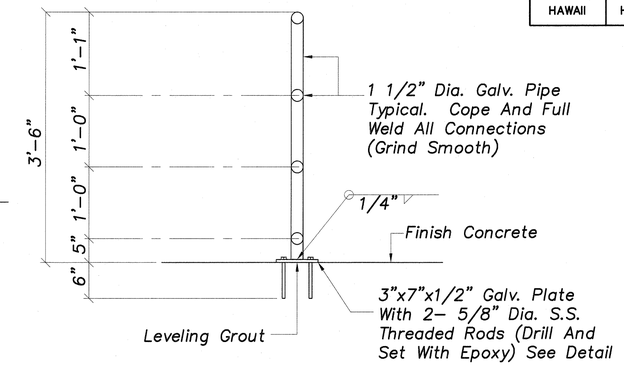

SECTION

Scale: 1"=1'-0"

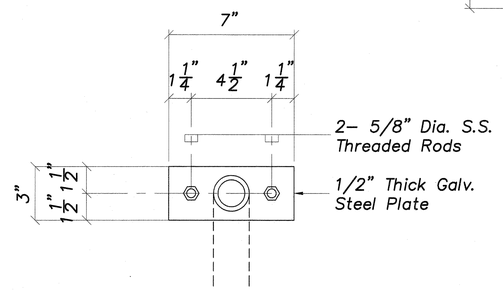

ANCHOR PLATE DETAIL

Scale: 3"=1'-0"

B
S-9 S-9A

NEW RAILING DETAIL

Scale: As Noted

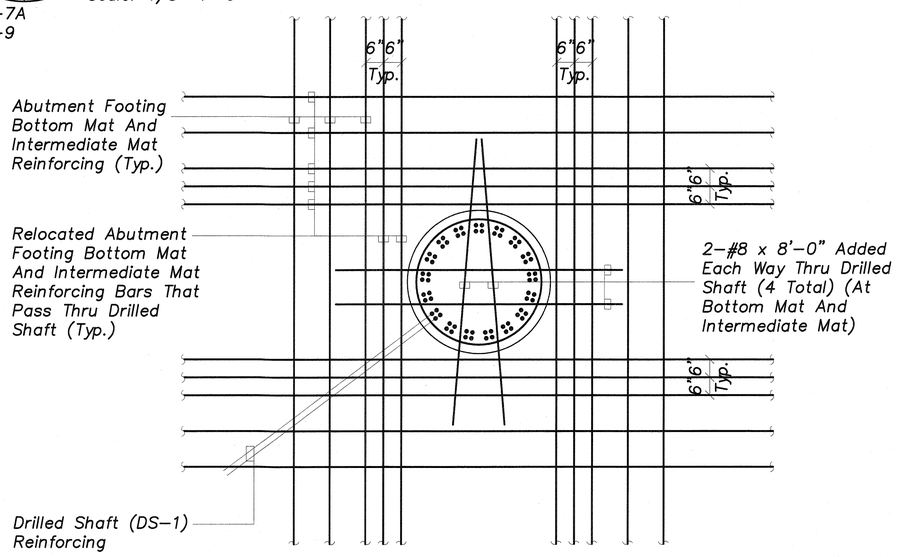

RELOCATED ABUTMENT FOOTING REINFORCING AT DRILLED SHAFT (DS-1)

C
S-10 S-9A
S-11, S-14

Scale: 1/2"=1'-0"

Note:
This Tracing Prepared During "As-Built" Posting.

GRAPHIC SCALES

0 8' 16' 32'
SCALE: 1/8" = 1'-0"

0 2' 4' 8'
SCALE: 1/2" = 1'-0"

0 1' 2' 3'
SCALE: 1" = 1'-0"

0 1'
SCALE: 3" = 1'-0"

DATE	REVISION

STATE OF HAWAII
DEPARTMENT OF TRANSPORTATION
HIGHWAYS DIVISION

NEW RAILING PLAN AND DETAILS, FOOTING REINFORCING AT DS-1
HAWAII BELT ROAD
KUPAPAULUA BRIDGE WIDENING
HAMAKUA DISTICT
Federal Aid Project No. BR-019-2(38)

Scale: As Noted Date: June 23, 2003

SHEET No. S-9A OF 36 SHEETS

ORIGINAL PLAN
SURVEY PLOTTED BY
DRAWN BY
TRACED BY
DESIGNED BY
QUANTITIES BY
CHECKED BY
DATE
NOTEBOOK No.

"AS-BUILT"

FED. ROAD DIST. NO.	STATE	FED. AID PROJ. NO.	FISCAL YEAR	SHEET NO.	TOTAL SHEETS
HAWAII	HAW.	BR-019-2(38)	2002	53A	79

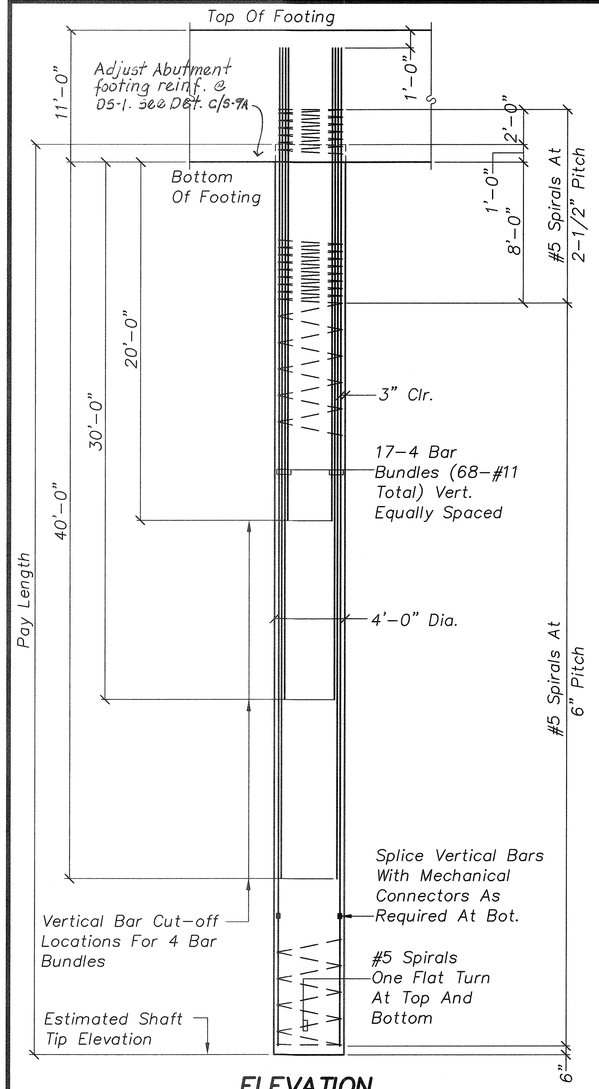

ELEVATION
1/4"=1'-0"

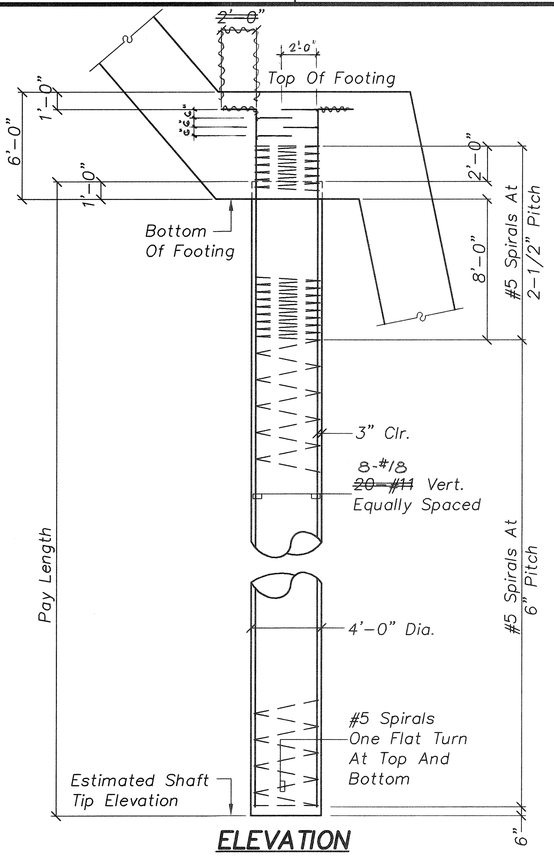

ELEVATION
1/4"=1'-0"

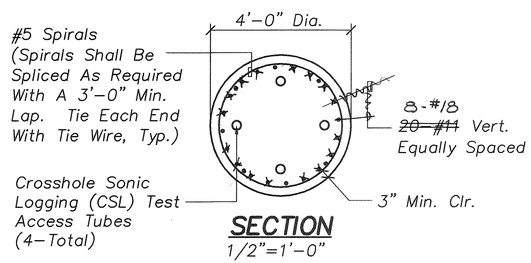

SECTION
1/2"=1'-0"

DRILLED SHAFT (DS-2)

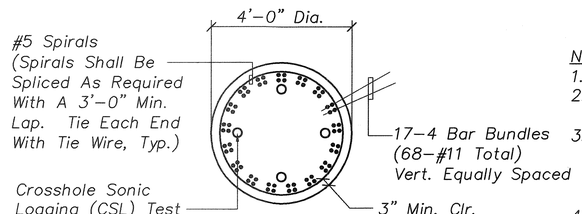

SECTION
1/2"=1'-0"

DRILLED SHAFT (DS-1)

Notes:

1. Drilled shaft concrete shall be 4000 PSI strength at 28 days.
2. Concrete spacers shall be used to maintain the reinforcement cage in position within the shaft.
3. Spirals may be discontinuous at footing reinforcement to allow for placing footing reinforcement. The discontinuous spirals shall be terminated with a 135° hook around vertical reinforcement.
4. If temporary casing for the drilled shafts (type DS-2) are required, mechanical connectors shall be used for the hooked ends of the vertical bars.
5. Refer to section 511-drilled shafts of the special provisions.

DRILLED SHAFT DETAILS

S-10, S-11, S-14, A S-15|S-10 Scale As Noted

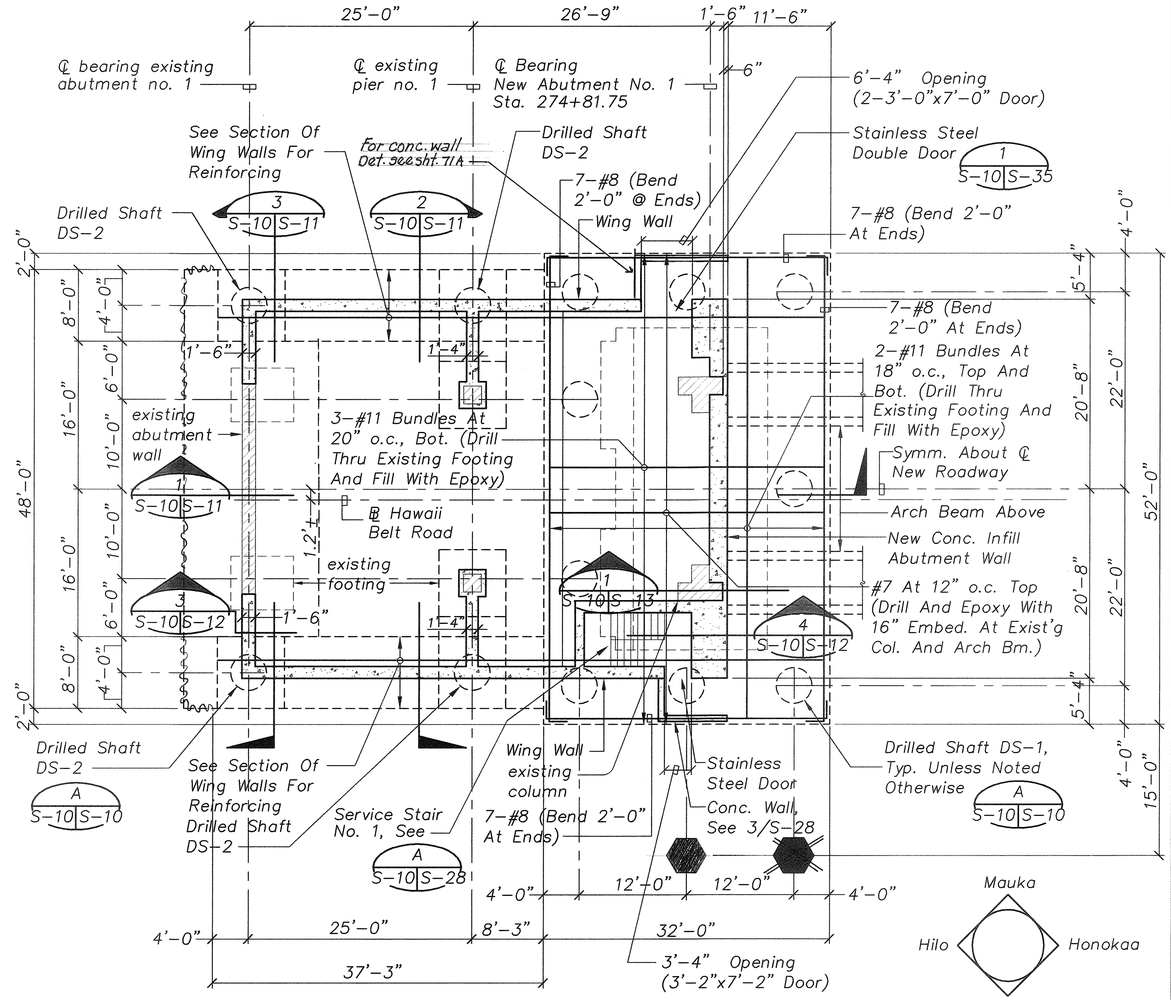

Denotes Recommended Location Of Trial / Load Test Shaft. Actual Location Shall Be Determined In The Field.

NEW ABUTMENT NO. 1 FOUNDATION PLAN

S-7, B S-8|S-10 Scale: 1/8"=1'-0"

GRAPHIC SCALES

0 8' 16' 24'
SCALE: 1/8" = 1'-0"

0 4' 8' 12'
SCALE: 1/4" = 1'-0"

0 2' 4' 8'
SCALE: 1/2" = 1'-0"

MYRON G. OKUBO LICENSED PROFESSIONAL ENGINEER No. 4320-S HAWAII, U.S.A.

THIS WORK WAS PREPARED BY ME OR UNDER MY SUPERVISION

Myron Okubo

DATE	REVISION

STATE OF HAWAII
DEPARTMENT OF TRANSPORTATION
HIGHWAYS DIVISION

NEW ABUTMENT NO. 1 FOUNDATION PLAN, DRILLED SHAFT DETAILS
HAWAII BELT ROAD
KUPAPAULUA BRIDGE WIDENING
HAMAKUA DISTICT
Federal Aid Project No. BR-019-2(38)

Scale: As Noted Date: June 23, 2003

SHEET No. S-10 OF 36 SHEETS

ORIGINAL PLAN | NOTEBOOK No. | SURVEY PLOTTED BY | DRAWN BY | TRACED BY | DESIGNED BY | QUANTITIES BY | CHECKED BY | DATE

"AS-BUILT"

FED. ROAD DIST. NO.	STATE	FED. AID PROJ. NO.	FISCAL YEAR	SHEET NO.	TOTAL SHEETS
HAWAII	HAW.	BR-019-2(38)	2002	54A	79

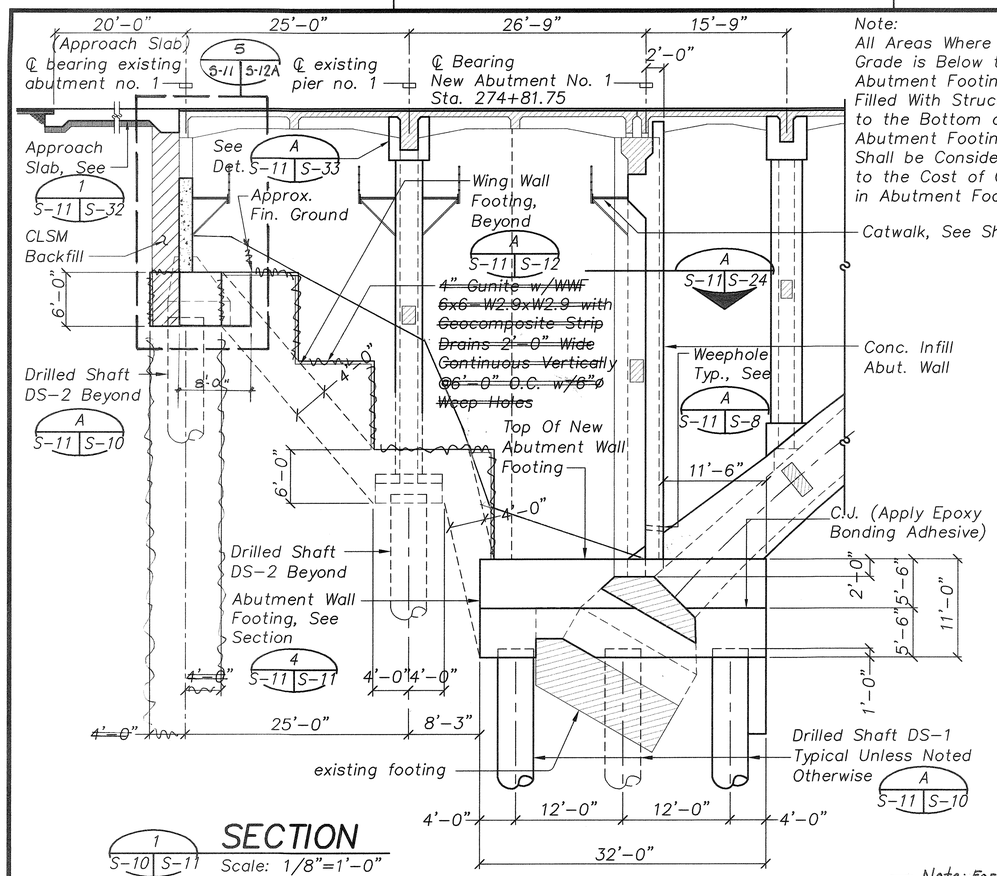

Note:
All Areas Where the Existing Grade is Below the New Abutment Footing Shall be Filled With Structural Backfill to the Bottom of the New Abutment Footing. The Cost Shall be Considered Incidental to the Cost of Concrete in Abutment Footings.

SECTION

1 S-10 S-11 Scale: 1/8"=1'-0"

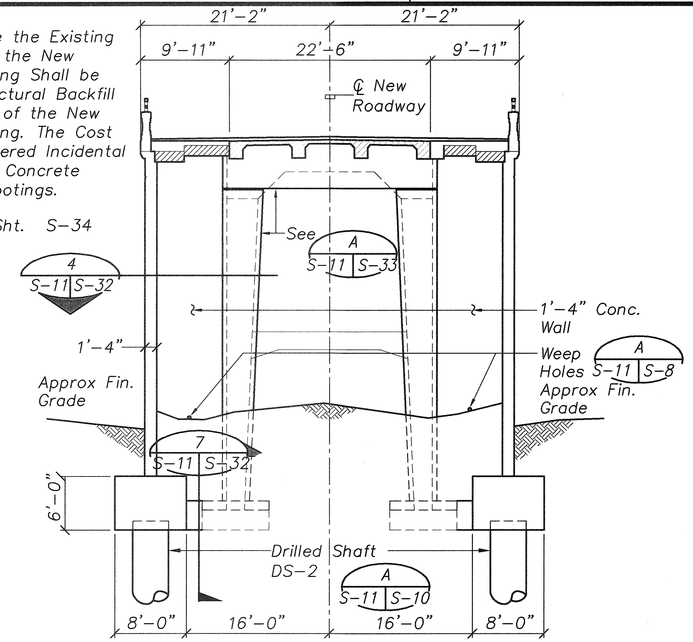

AT EXISTING PIER NO. 1

SECTION

2 S-10, S-14 S-11 Scale: 1/8"=1'-0"

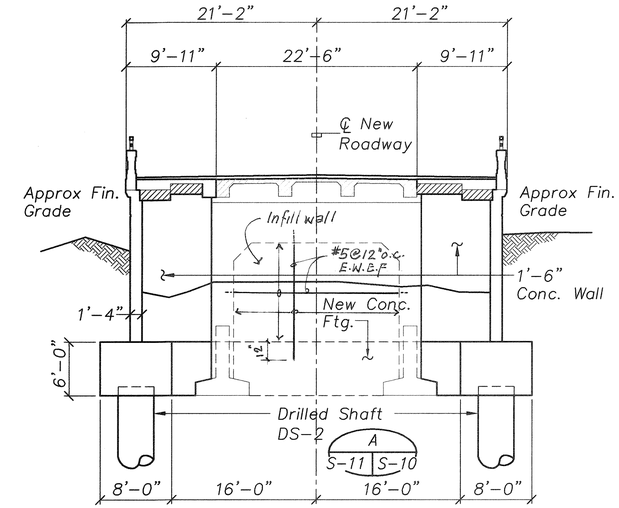

AT EXISTING ABUTMENT NO. 1

SECTION

3 S-10 S-11 Scale: 1/8"=1'-0"

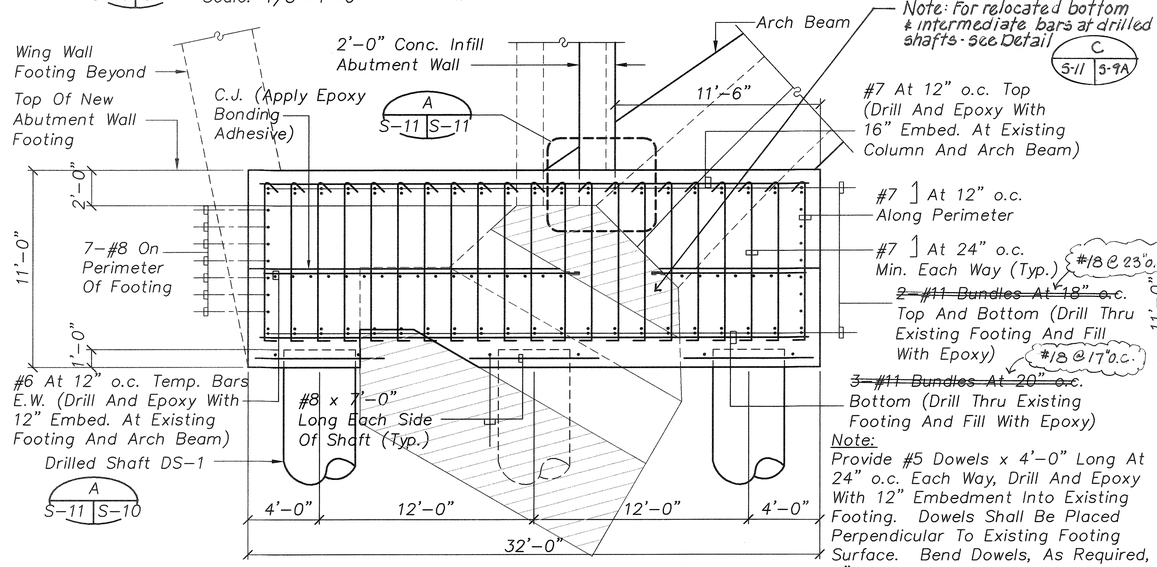

Note:
Provide #5 Dowels x 4'-0" Long At 24" o.c. Each Way, Drill And Epoxy With 12" Embedment Into Existing Footing. Dowels Shall Be Placed Perpendicular To Existing Footing Surface. Bend Dowels, As Required, 6" From New Footing Face. Omit Dowels In Areas Where Arch Beam Drill And Epoxy Hook Ties Are Provided.

ABUTMENT WALL NO. 1 FOOTING SECTION

4 S-11 S-11 Scale: 1/4"=1'-0"

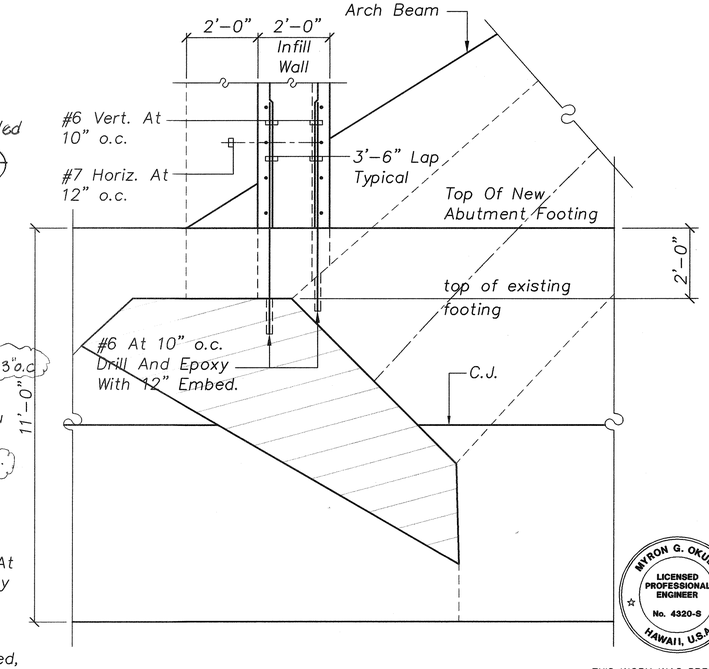

DETAIL

A S-11, S-15 S-11 Scale: 1/2"=1'-0"

GRAPHIC SCALES

0 8' 16' 24'
SCALE: 1/8" = 1'-0"
0 4' 8' 12'
SCALE: 1/4" = 1'-0"
0 2' 4' 6'
SCALE: 1/2" = 1'-0"

MYRON G. OKUBO LICENSED PROFESSIONAL ENGINEER No. 4320-S HAWAII, U.S.A.

THIS WORK WAS PREPARED BY ME OR UNDER MY SUPERVISION

Myron Okubo

DATE	REVISION

STATE OF HAWAII
DEPARTMENT OF TRANSPORTATION
HIGHWAYS DIVISION

FOUNDATION SECTIONS AND DETAILS

HAWAII BELT ROAD
KUPAPAULUA BRIDGE WIDENING
HAMAKUA DISTICT
Federal Aid Project No. BR-019-2(38)

Scale: As Noted Date: June 23, 2003

SHEET No. S-11 OF 36 SHEETS

ORIGINAL PLAN	SURVEY PLOTTED BY	DATE
	DRAWN BY	
	TRACED BY	
NOTEBOOK	DESIGNED BY	
	QUANTITIES BY	
No.	CHECKED BY	

Path: L:\WOA\6670-01 Kupapaulua Bridge\Struct\NEW-1 Filename: S11 Plot date: Sep 25, 2006-07:52:01pm CAD User: skidani. Xref Filename: | Border | AUTODATE |

"AS-BUILT"

FED. ROAD DIST. NO.	STATE	FED. AID PROJ. NO.	FISCAL YEAR	SHEET NO.	TOTAL SHEETS
HAWAII	HAW.	BR-019-2(38)	2002	55A	79

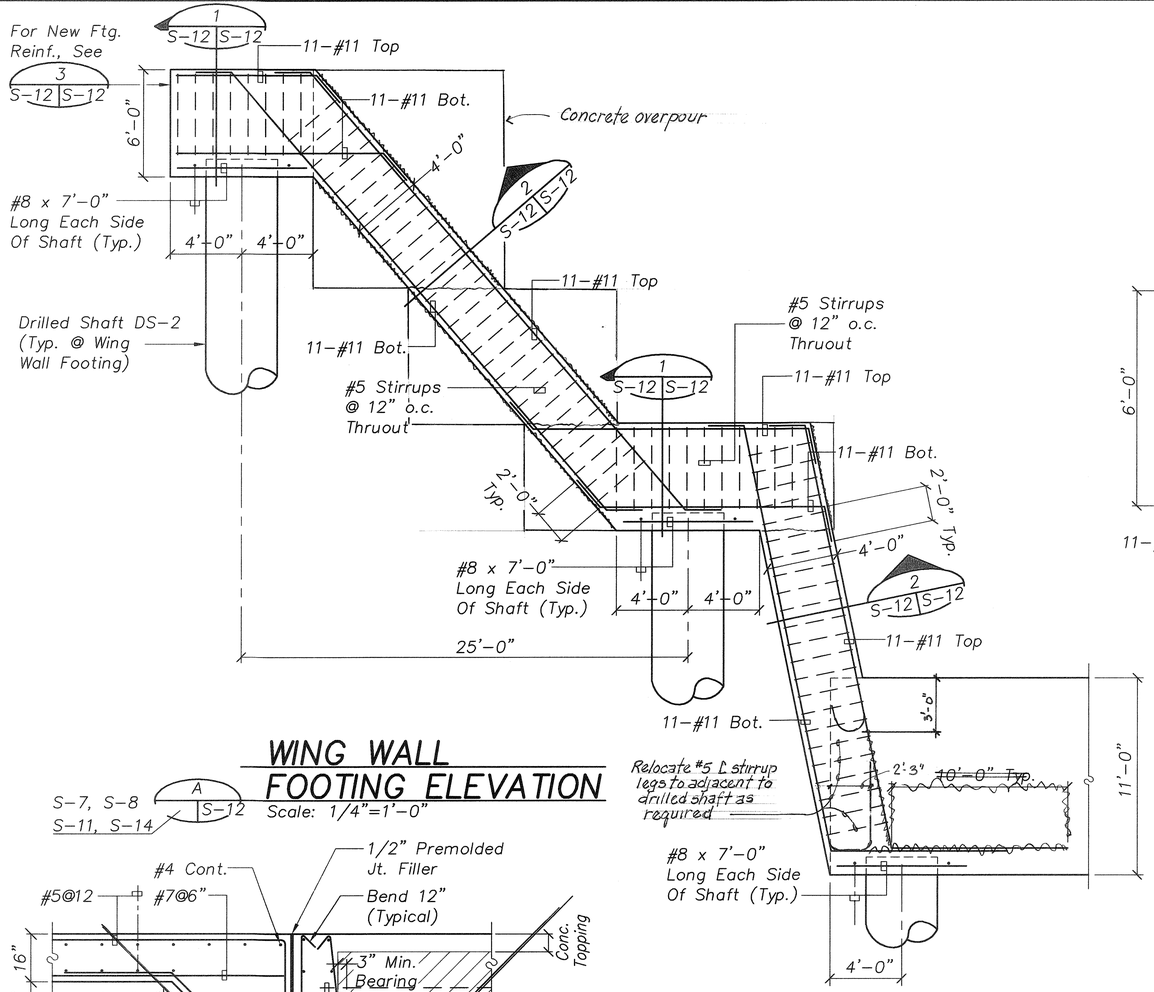

WING WALL FOOTING ELEVATION

A S-12 — S-7, S-8, S-11, S-14 — Scale: 1/4"=1'-0"

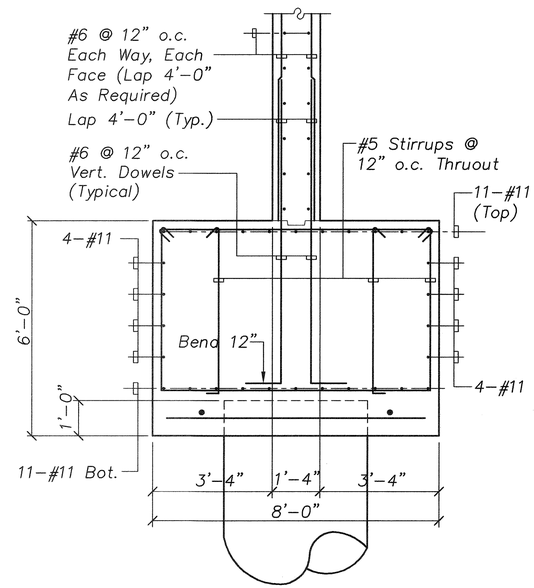

SECTION

1 S-12 S-12 — Scale: 1/2"=1'-0"

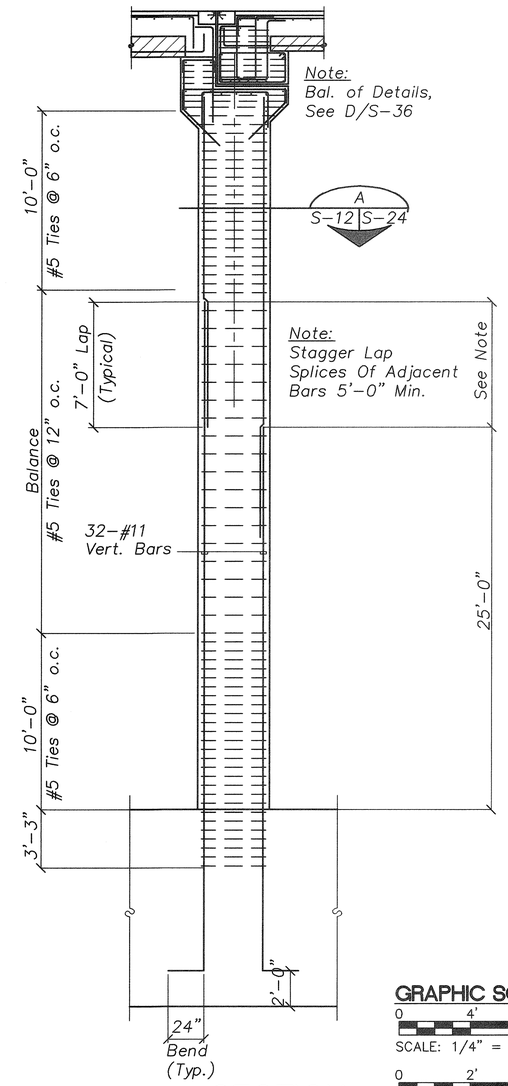

SECTION

4 S-14 S-12 — Scale: 1/4"=1'-0"

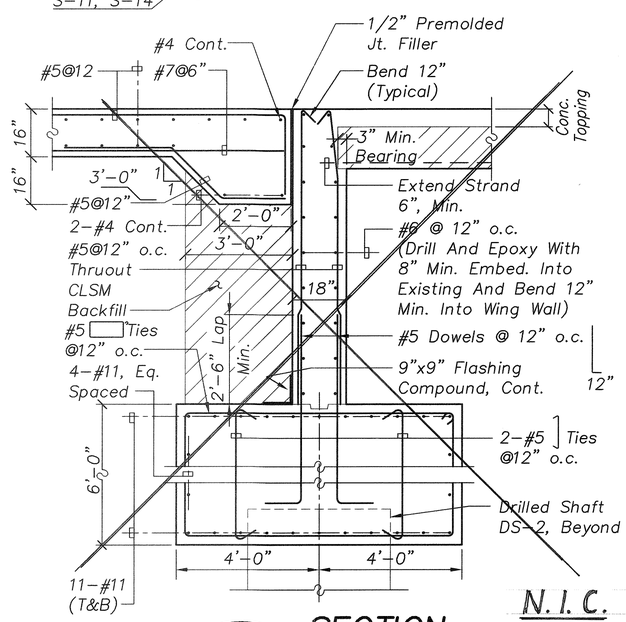

N.I.C.

SECTION

3 S-10, S-14 S-12 — Scale: 1/2"=1'-0"

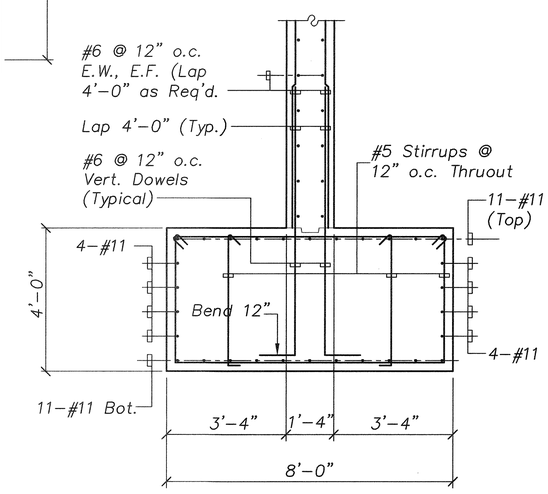

SECTION

2 S-12 S-12 — Scale: 1/2"=1'-0"

GRAPHIC SCALES

0 4' 8' 12' — SCALE: 1/4" = 1'-0"

0 2' 4' 6' — SCALE: 1/2" = 1'-0"

ORIGINAL PLAN	SURVEY PLOTTED BY	DATE
	DRAWN BY	
NOTEBOOK	TRACED BY	
	DESIGNED BY	
	QUANTITIES BY	
No.	CHECKED BY	

MYRON G. OKUBO LICENSED PROFESSIONAL ENGINEER No. 4320-S HAWAII, U.S.A.

THIS WORK WAS PREPARED BY ME OR UNDER MY SUPERVISION

Myron Okubo

DATE	REVISION

STATE OF HAWAII
DEPARTMENT OF TRANSPORTATION
HIGHWAYS DIVISION

FOUNDATION SECTIONS AND DETAILS

HAWAII BELT ROAD
KUPAPAULUA BRIDGE WIDENING
HAMAKUA DISTICT
Federal Aid Project No. BR-019-2(38)

Scale: As Noted — Date: June 23, 2003

SHEET No. S-12 OF 36 SHEETS

"AS-BUILT"

55A

FED. ROAD DIST. NO.	STATE	FED. AID PROJ. NO.	FISCAL YEAR	SHEET NO.	TOTAL SHEETS
HAWAII	HAW.	BR-019-2(38)	2002	55A S-1	79

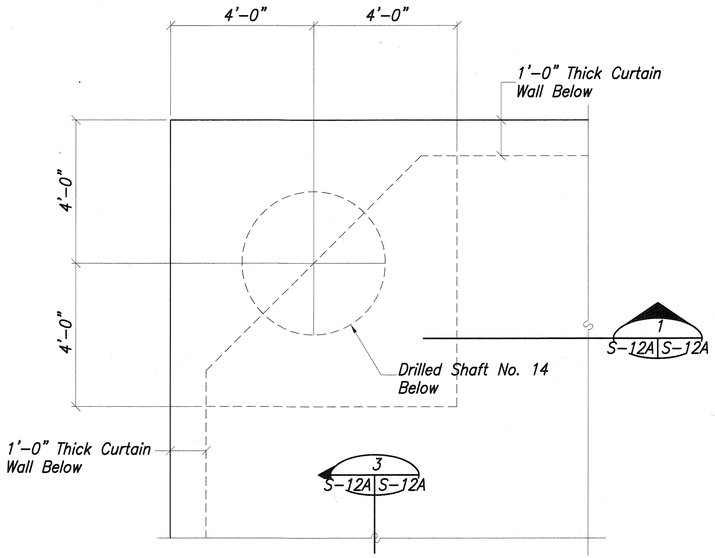

REVISED FOOTING AT ABUTMENT NO. 2 DRILLED SHAFT NO. 14

Scale: 1/2"=1'-0"

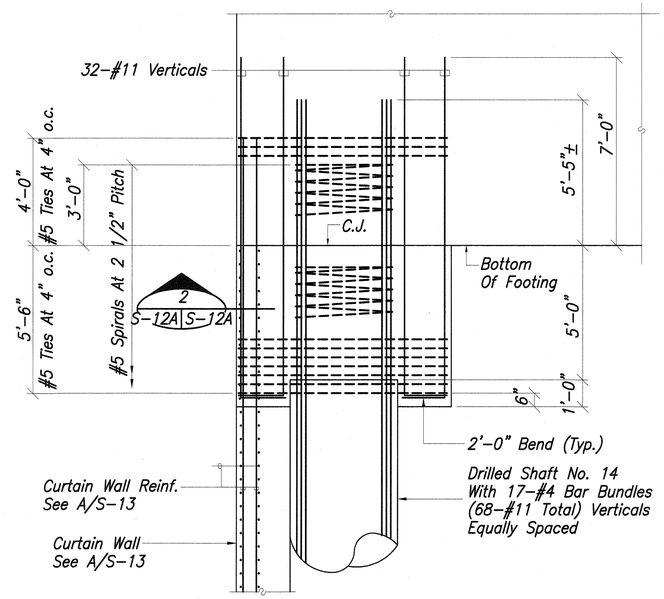

SECTION

1 S-12A, S-14 S-12A Scale: 3/8"=1'-0"

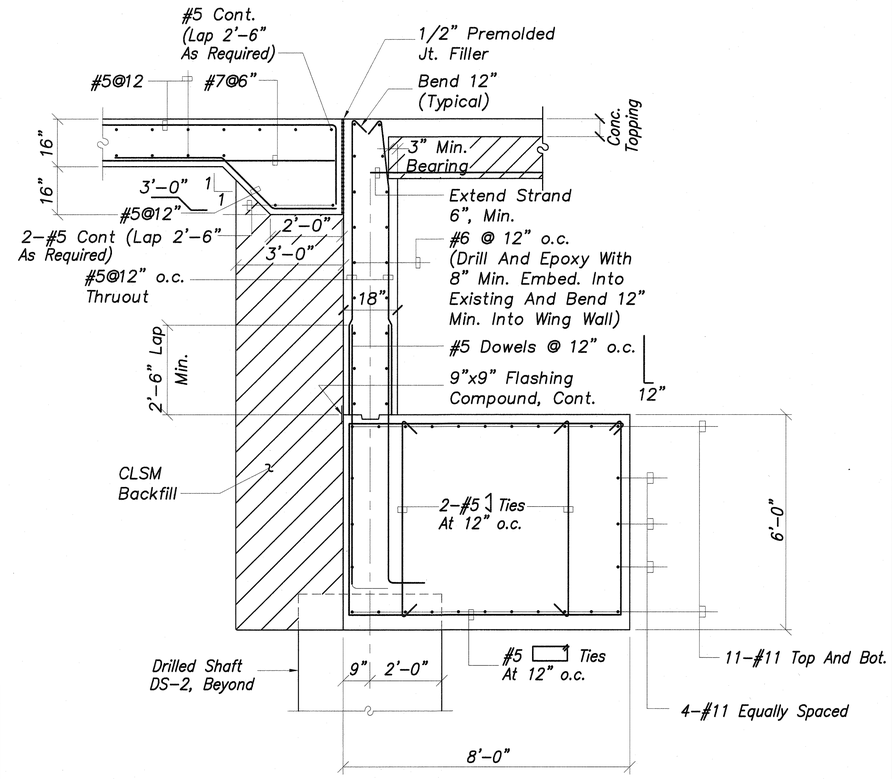

SECTION

5 S-11, S-14 S-12A Scale: 1/2"=1'-0"

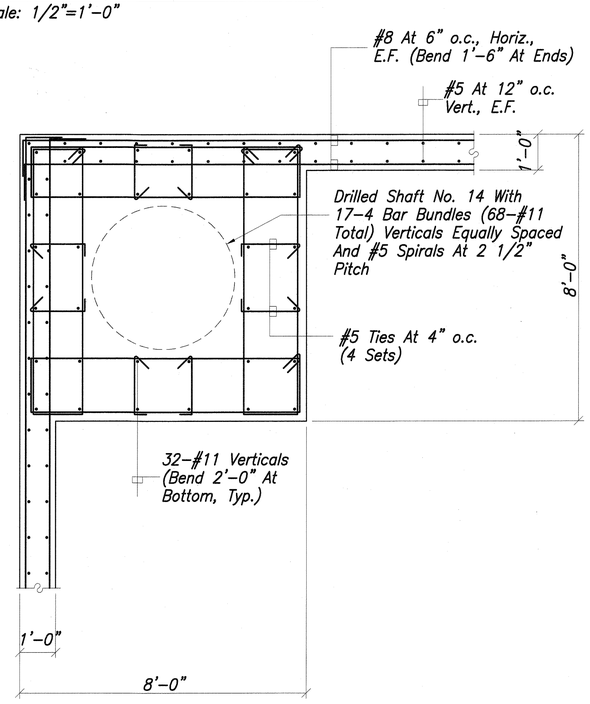

SECTION

2 S-12A S-12A Scale: 1/2"=1'-0"

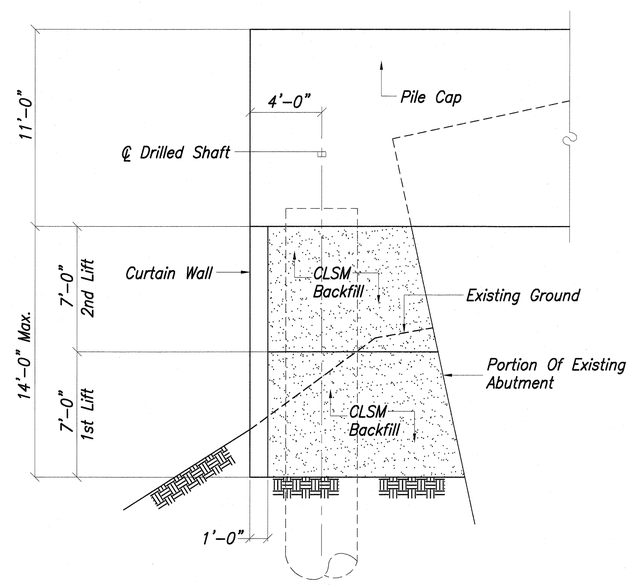

ABUTMENT NO. 2 CURTAIN WALL BACKFILL

3 S-12A, S-14 S-12A Scale: 1/4"=1'-0"

Note:
This Tracing Prepared During "As-Built" Posting.

GRAPHIC SCALES

0 2' 4' 6' 8'
SCALE: 1/4" = 1'-0"

0 4' 8' 12'
SCALE: 1/4" = 1'-0"

0 2' 4' 6'
SCALE: 1/2" = 1'-0"

DATE	REVISION

STATE OF HAWAII
DEPARTMENT OF TRANSPORTATION
HIGHWAYS DIVISION

FOUNDATION SECTIONS AND DETAILS

HAWAII BELT ROAD
KUPAPAULUA BRIDGE WIDENING
HAMAKUA DISTICT
Federal Aid Project No. BR-019-2(38)

Scale: As Noted Date: June 23, 2003

SHEET No. S-12A OF 36 SHEETS

ORIGINAL PLAN | SURVEY PLOTTED BY | DRAWN BY | TRACED BY | DESIGNED BY | QUANTITIES BY | CHECKED BY | DATE
NOTEBOOK No.

"AS-BUILT"

55A S-1

FED. ROAD DIST. NO.	STATE	FED. AID PROJ. NO.	FISCAL YEAR	SHEET NO.	TOTAL SHEETS
HAWAII	HAW.	BR-019-2(38)	2001	56	73

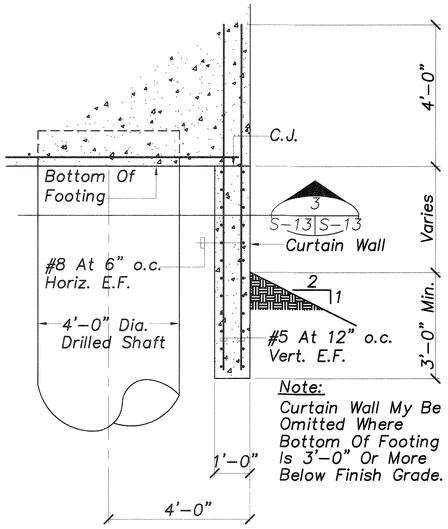

Note:
Curtain Wall My Be Omitted Where Bottom Of Footing Is 3'-0" Or More Below Finish Grade.

A S-9 S-13 CURTAIN WALL DETAIL
Scale: 1/2"=1'-0"

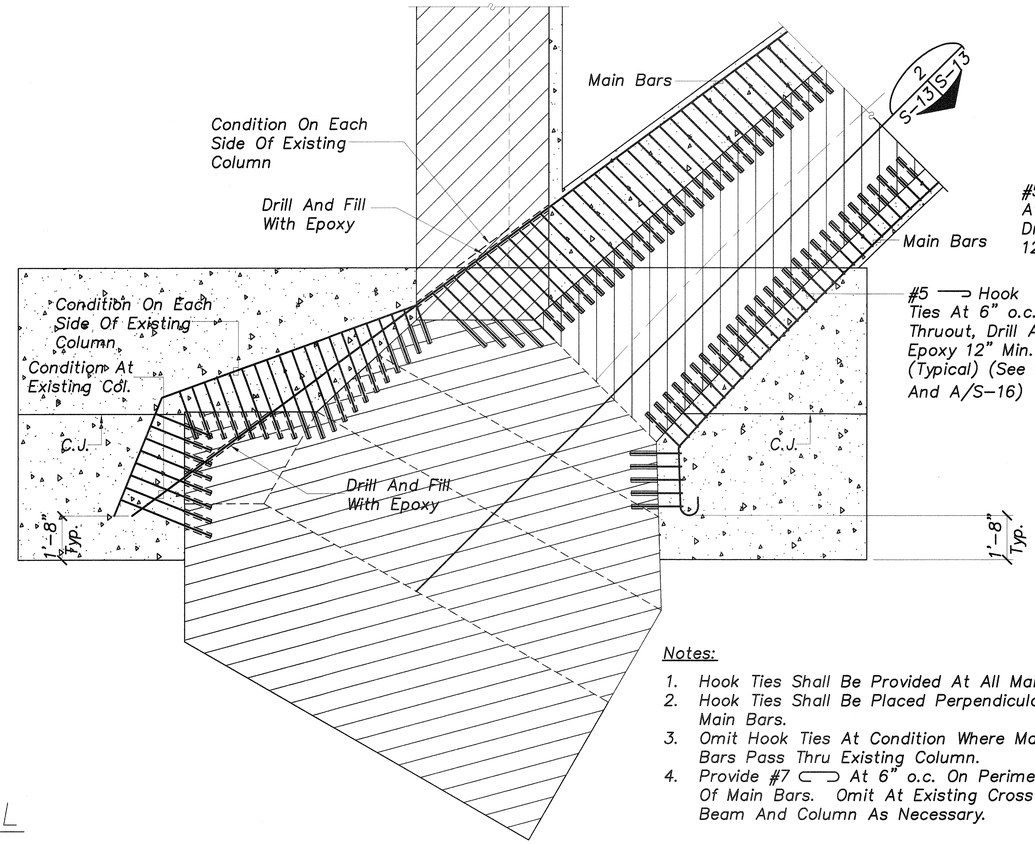

Notes:

1. Hook Ties Shall Be Provided At All Main Bars.
2. Hook Ties Shall Be Placed Perpendicular To Main Bars.
3. Omit Hook Ties At Condition Where Main Bars Pass Thru Existing Column.
4. Provide #7 ⊂⊃ At 6" o.c. On Perimeter Of Main Bars. Omit At Existing Cross Beam And Column As Necessary.

1 S-10 S-13 SECTION THRU EXISTING FOOTING
Scale: 3/8"=1'-0"

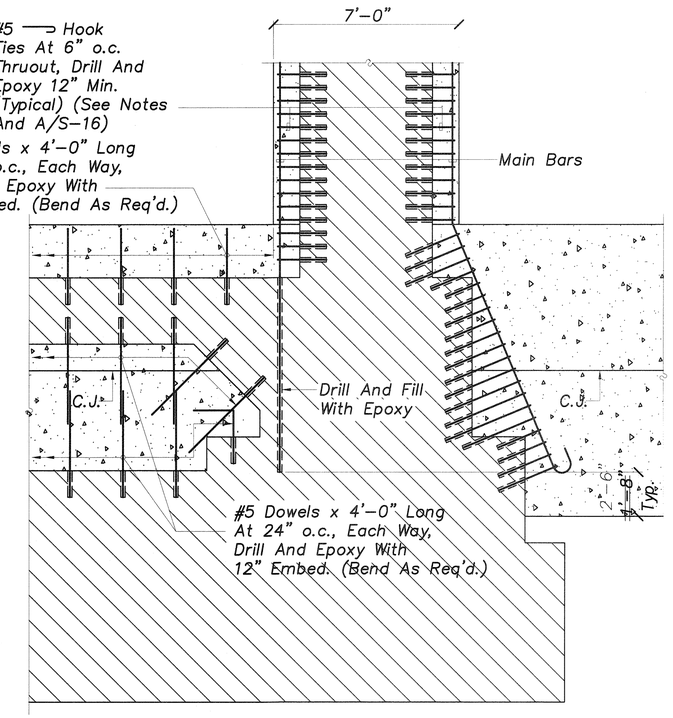

2 S-13 S-13 SECTION THRU EXISTING FOOTING
Scale: 3/8"=1'-0"

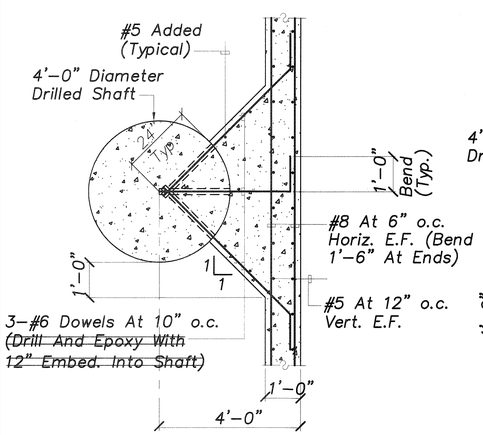

SECTION

A S-9 S-13 CURTAIN WALL DETAIL
Scale: 1/2"=1'-0"

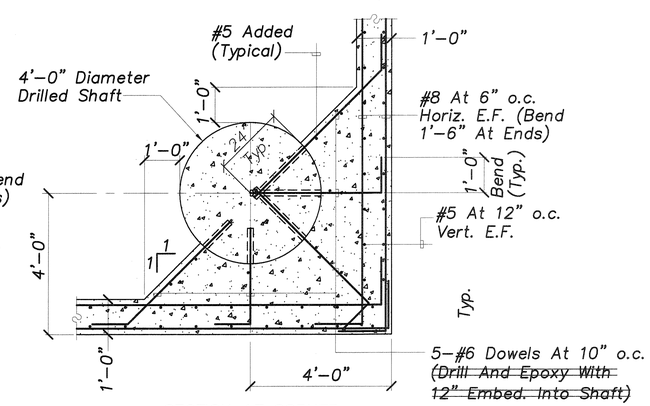

SECTION AT CORNER

3 S-13 S-13 SECTION
Scale: 1/2"=1'-0"

LEGEND FOR AS-BUILT POSTINGS	
~~	Squiggly line for as-built deletion
~~100.00~~	Double line for as-built deletion
Roadway	Text for as-built posting

GRAPHIC SCALES

0 2' 4' 6'
SCALE: 1/2" = 1'-0"

0 2' 4' 6' 8'
SCALE: 3/8" = 1'-0"

GEORGE K. NISHIMURA LICENSED PROFESSIONAL ENGINEER No. 1988-3 HAWAII, U.S.A.

THIS WORK WAS PREPARED BY ME OR UNDER MY SUPERVISION

04/30/08
Expiration Date of Professional License

STATE OF HAWAII
DEPARTMENT OF TRANSPORTATION
HIGHWAYS DIVISION

FOUNDATION SECTIONS AND DETAILS

HAWAII BELT ROAD
KUPAPAULUA BRIDGE WIDENING
HAMAKUA DISTRICT
Federal Aid Project No. BR-019-2(38)

SCALE: AS NOTED DATE: OCT., 2001

SHEET No. S-13 OF 30 SHEETS

ORIGINAL PLAN	SURVEY PLOTTED BY	DATE
	DRAWN BY	
	TRACED BY	
	DESIGNED BY	
NOTE BOOK	CHECKED BY	
No.	CHECKED BY	

"AS-BUILT"

FED. ROAD DIST. NO.	STATE	FED. AID PROJ. NO.	FISCAL YEAR	SHEET NO.	TOTAL SHEETS
HAWAII	HAW.	BR-019-2(38)	2002	57A	79

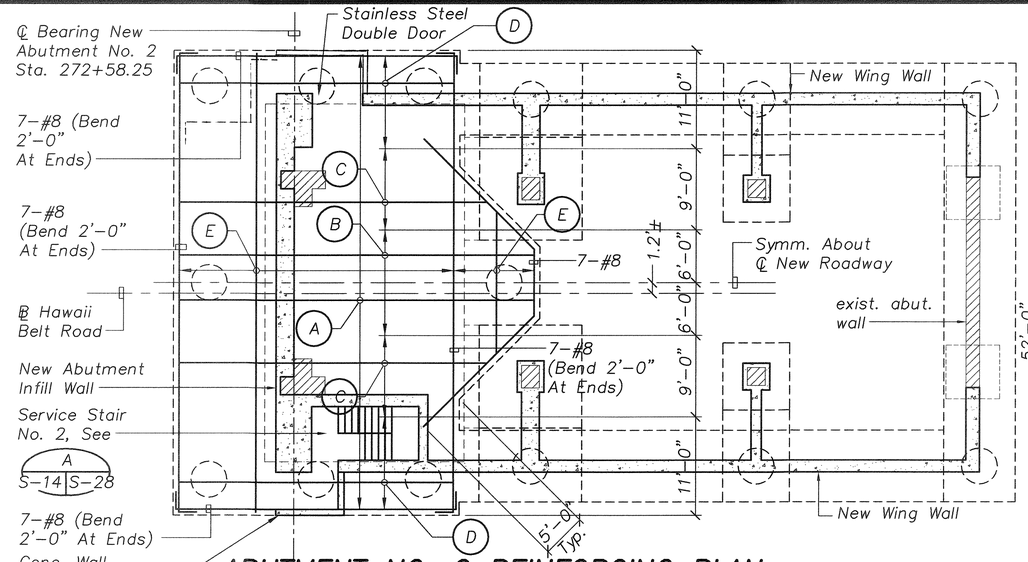

ABUTMENT NO. 2 REINFORCING PLAN

Scale: 1/8"=1'-0"

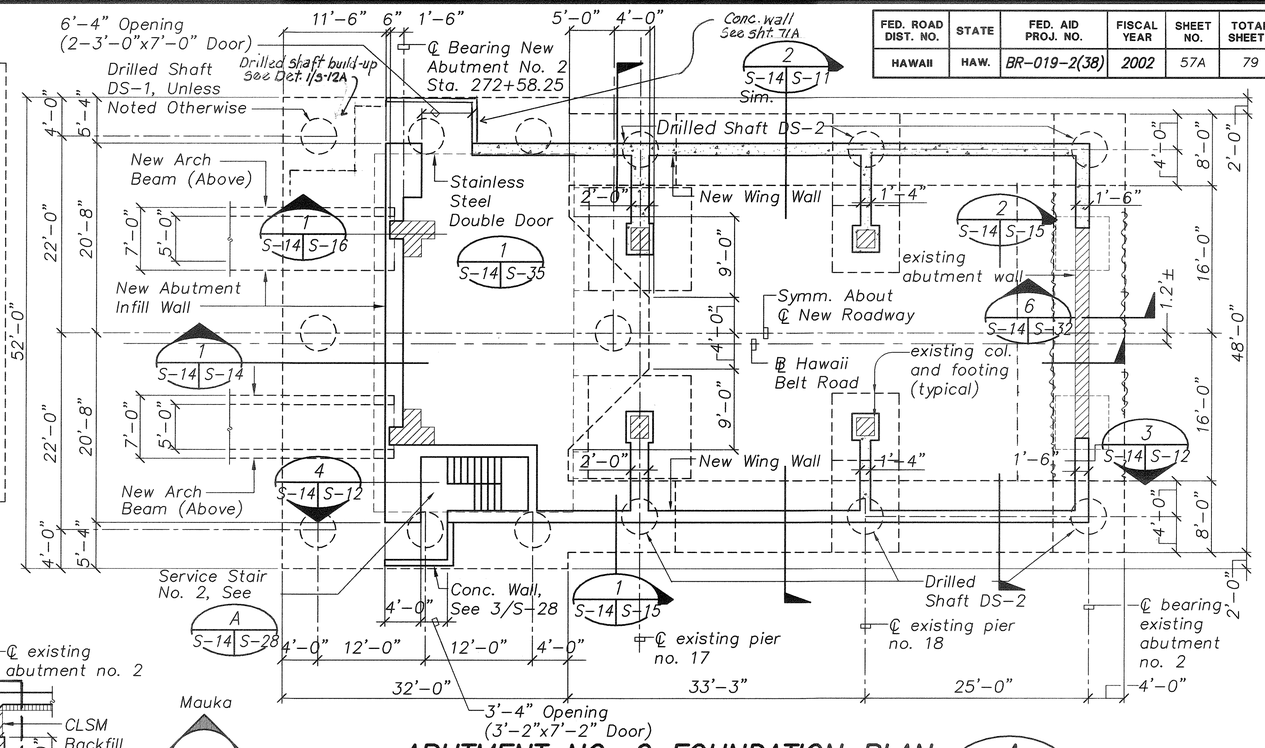

ABUTMENT NO. 2 FOUNDATION PLAN (A S-7, S-8 S-14)

Scale: 1/8"=1'-0"

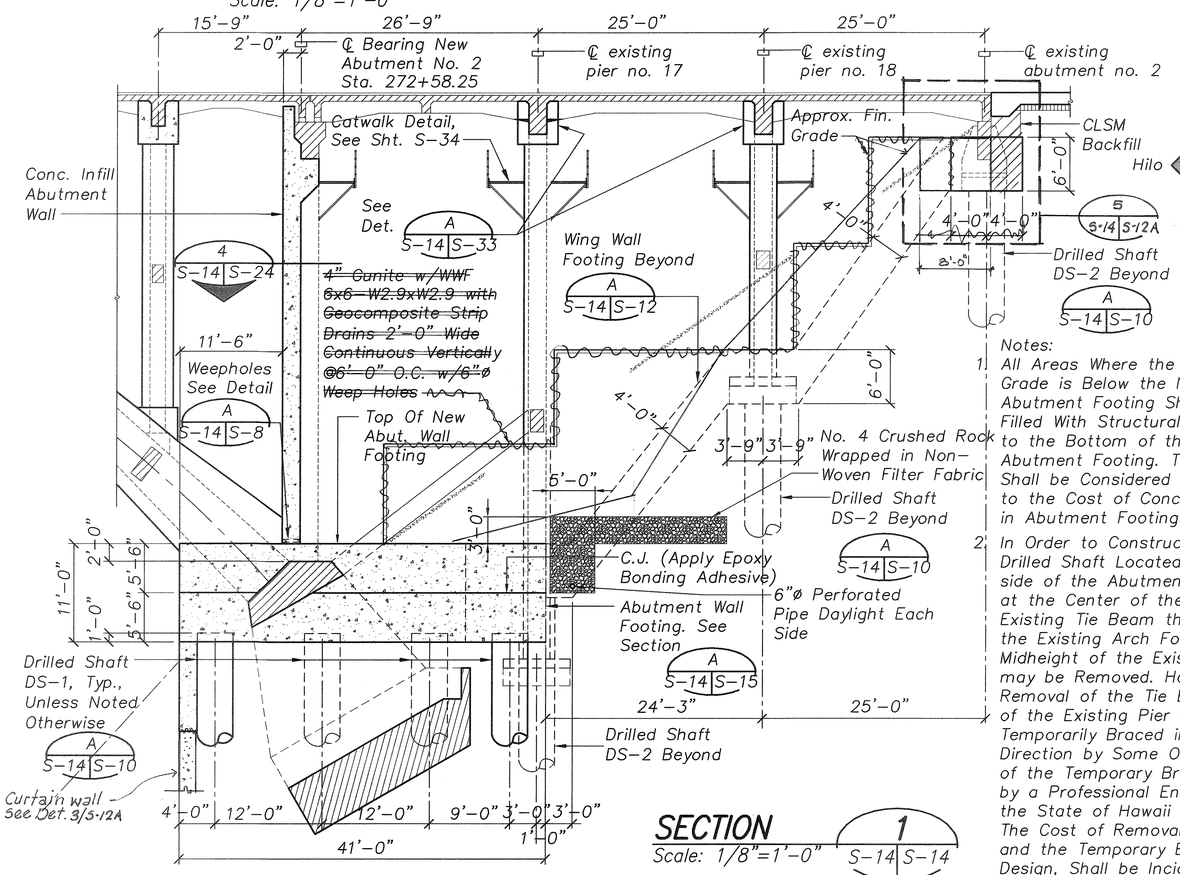

SECTION (1 S-14 S-14)

Scale: 1/8"=1'-0"

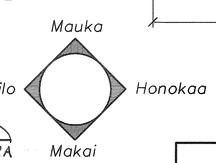

Notes:

1. All Areas Where the Existing Grade is Below the New Abutment Footing Shall be Filled With Structural Backfill to the Bottom of the New Abutment Footing. The Cost Shall be Considered Incidental to the Cost of Concrete in Abutment Footings.
2. In Order to Construct the Center Drilled Shaft Located on the Back-side of the Abutment No. 2 Footing at the Center of the Roadway, the Existing Tie Beam that Extends From the Existing Arch Footing to the Midheight of the Existing Pier No. 17 may be Removed. However, Prior to Removal of the Tie Beam, the Midheight of the Existing Pier No. 17 Shall be Temporarily Braced in the Longitudinal Direction by Some Other Means. Design of the Temporary Brace Shall be Prepared by a Professional Engineer Licensed in the State of Hawaii for Acceptance. The Cost of Removal of the Tie Beam and the Temporary Brace, Including Design, Shall be Incidental to the Cost for Drilled Shaft.

REINFORCING SCHEDULE

Mark	Reinforcement	Remarks
A	#7 At 12" o.c. Top	Drill And Epoxy With 16" Embedment At Existing Column And Arch Beam
B	~~3-#11 Bundles at 9" o.c. Bottom~~ #18 @ 7½" o.c. Bottom	
C	~~2-#11 Bundles At 18" o.c. Bottom~~ #18 @ 23" o.c. Bottom	Drill Thru Existing Footing And Fill With Epoxy
D	#11 At 9" o.c. Bottom	
E	~~2-#11 Bundles At 18" o.c.~~ #18 @ 23" o.c. Top And Bottom	Drill Thru Existing Footing As Required And Fill With Epoxy
F	#11 At 9" o.c. Top And Bottom	

GRAPHIC SCALES

0 8' 16' 24'
SCALE: 1/8" = 1'-0"

0 1' 2'
SCALE: 1-1/2" = 1'-0"

MYRON G. OKUBO LICENSED PROFESSIONAL ENGINEER No. 4320-S HAWAII, U.S.A.

THIS WORK WAS PREPARED BY ME OR UNDER MY SUPERVISION

Myron Okubo

DATE	REVISION

STATE OF HAWAII
DEPARTMENT OF TRANSPORTATION
HIGHWAYS DIVISION

ABUTMENT NO. 2 FOUNDATION PLAN, FOUNDATION SECTION
HAWAII BELT ROAD
KUPAPAULUA BRIDGE WIDENING
HAMAKUA DISTICT
Federal Aid Project No. BR-019-2(38)

Scale: As Noted Date: June 23, 2003

SHEET No. S-14 OF 36 SHEETS

ORIGINAL PLAN	SURVEY PLOTTED BY	DATE
	DRAWN BY	
NOTEBOOK	TRACED BY	
	DESIGNED BY	
	QUANTITIES BY	
No.	CHECKED BY	

Path: L:\W0A\6670-01 Kupapaulua Bridge\Struct\NEW-1 Filename: S14 Plot date: Sep 25, 2008-07:52:48pm CAD User: skidani Xref Filename: | Border: | AUTODATE |

"AS-BUILT"

FED. ROAD DIST. NO.	STATE	FED. AID PROJ. NO.	FISCAL YEAR	SHEET NO.	TOTAL SHEETS
HAWAII	HAW.	BR-019-2(38)	2002	58A	79

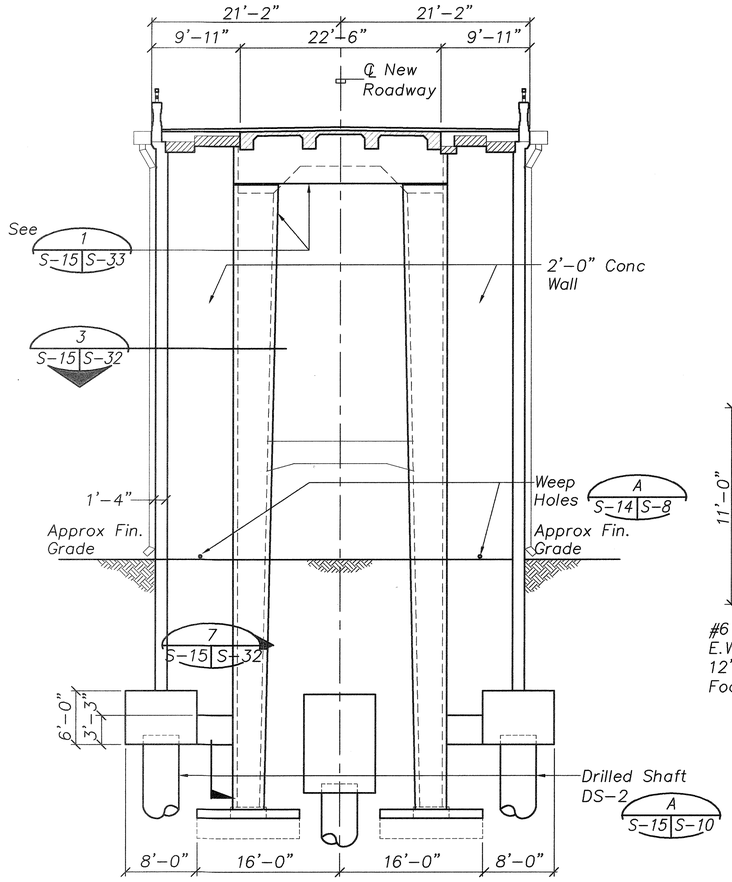

1 S-14 S-15 **SECTION** Scale: 1/8"=1'-0"

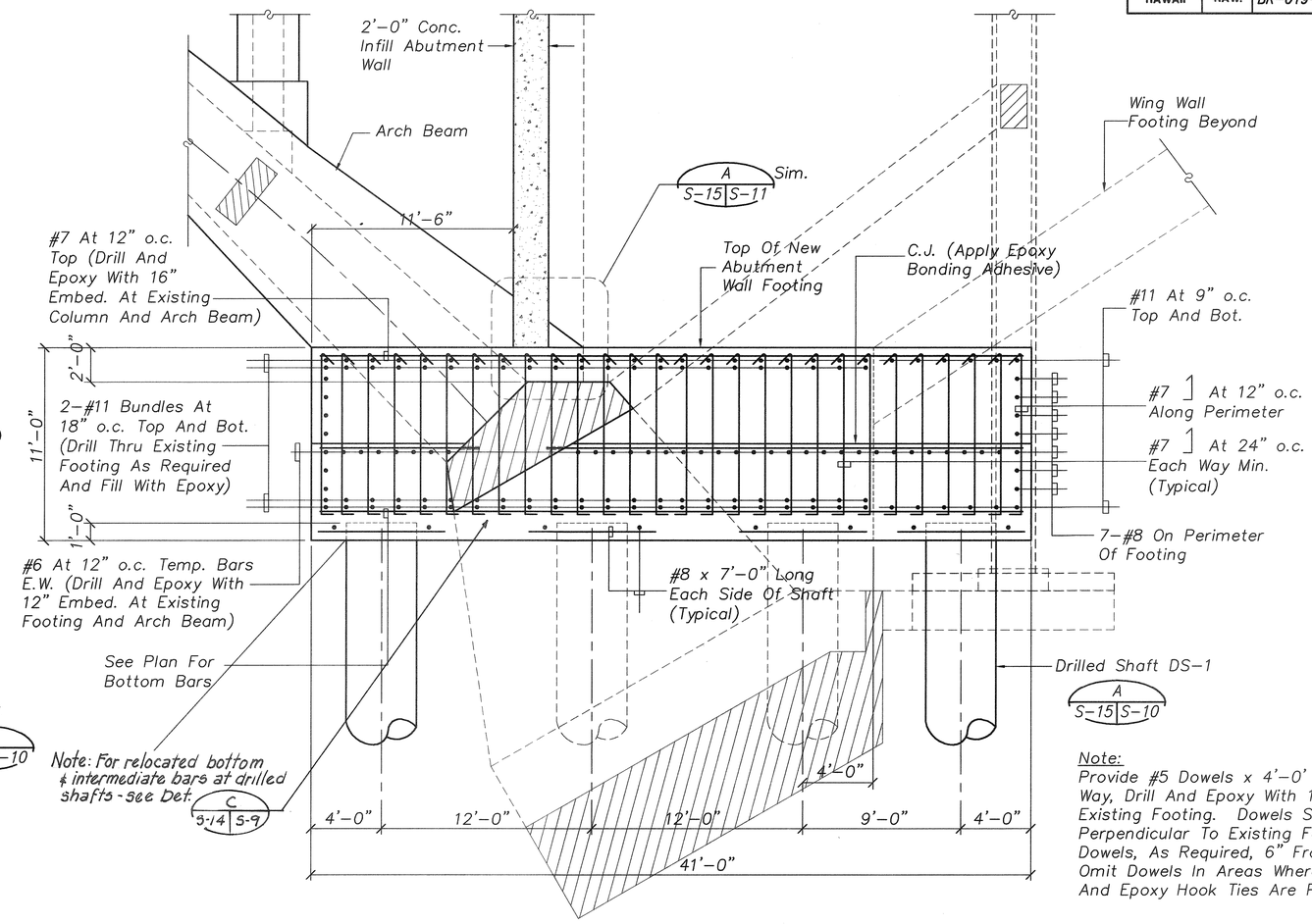

Note:
Provide #5 Dowels x 4'-0' Long At 24" o.c. Each Way, Drill And Epoxy With 12" Embedment Into Existing Footing. Dowels Shall Be Placed Perpendicular To Existing Footing Surface. Bend Dowels, As Required, 6" From New Footing Face. Omit Dowels In Areas Where Arch Beam Drill And Epoxy Hook Ties Are Provided.

3 S-14 S-15 **ABUTMENT NO. 2 WALL FOOTING SECTION** Scale: 1/4"=1'-0"

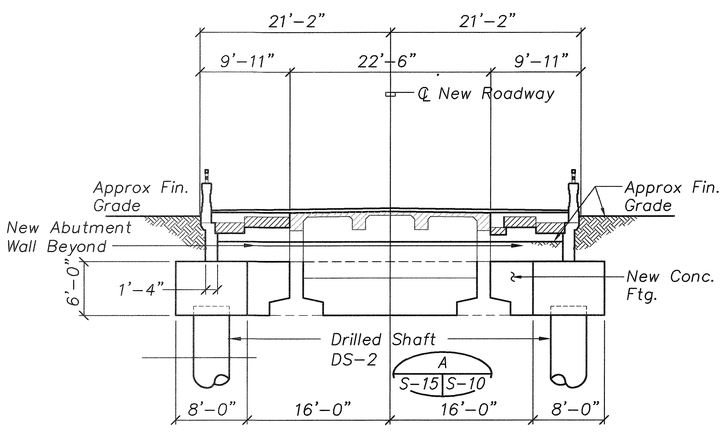

2 S-14 S-15 **SECTION** Scale: 1/8"=1'-0"

GRAPHIC SCALES

0 8' 16' 24'
SCALE: 1/8" = 1'-0"

0 4' 8' 12'
SCALE: 1/4" = 1'-0"

MYRON G. OKUBO LICENSED PROFESSIONAL ENGINEER No. 4320-S HAWAII, U.S.A.

THIS WORK WAS PREPARED BY ME OR UNDER MY SUPERVISION

Myron Okubo

DATE	REVISION

STATE OF HAWAII
DEPARTMENT OF TRANSPORTATION
HIGHWAYS DIVISION

FOUNDATION SECTIONS AND DETAILS

HAWAII BELT ROAD
KUPAPAULUA BRIDGE WIDENING
HAMAKUA DISTICT
Federal Aid Project No. BR-019-2(38)

Scale: As Noted Date: June 23, 2003

SHEET No. S-15 OF 36 SHEETS

ORIGINAL PLAN	SURVEY PLOTTED BY	DATE
	DRAWN BY	
NOTEBOOK	TRACED BY	
	DESIGNED BY	
	QUANTITIES BY	
No.	CHECKED BY	

Path: L:\WOA\6670-01 Kupapaulua Bridge\Downsp Filename: S15 Plot date: Sep 25, 2006-07:53:19pm CAD User: skidoni, Xref Filename: | Border | AUTODATE |

"AS-BUILT"

FED. ROAD DIST. NO.	STATE	FED. AID PROJ. NO.	FISCAL YEAR	SHEET NO.	TOTAL SHEETS
HAWAII	HAW.	BR-019-2(38)	2002	59	73

Notes:
1. Hook Ties Shall Be Provided At All Main Bars.
2. Hook ties Shall Be Placed Perpendicular To Main Bars.
3. Omit Hook Ties At Condition Where Main Bars Pass Thru Existing Columns.
4. Provide #7 ⊂⊃ At 6" o.c. On Perimeter Of Main Bars. Omit At Existing Cross Beam And Column As Necessary.

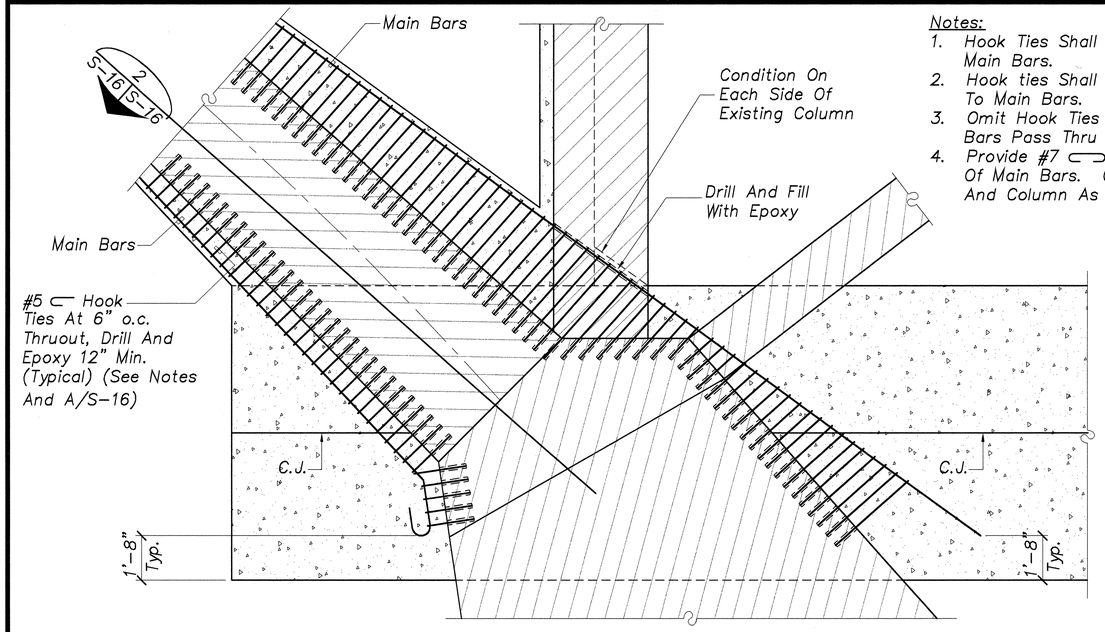

1 S-14 S-16 SECTION THRU EXISTING FOOTING
Scale: 3/8"=1'-0"

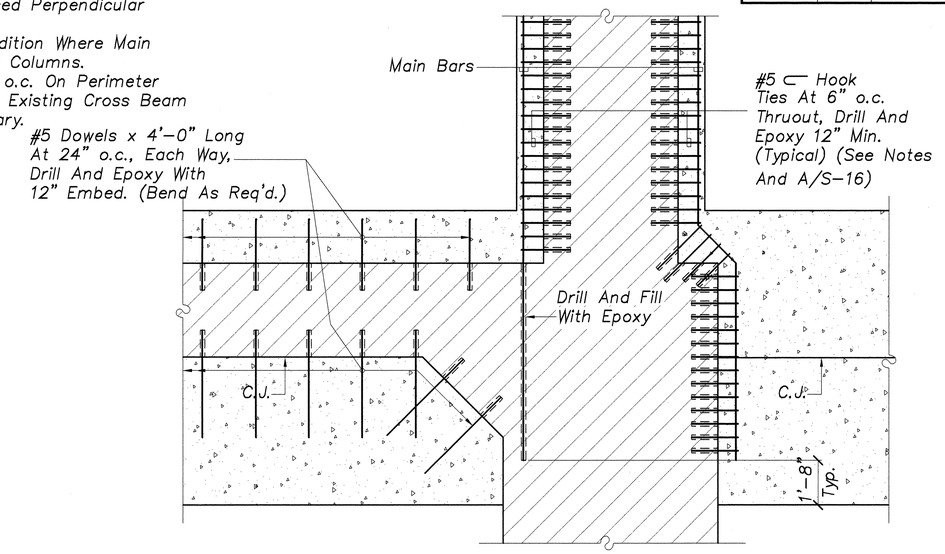

2 S-16 S-16 SECTION THRU EXISTING FOOTING
Scale: 3/8"=1'-0"

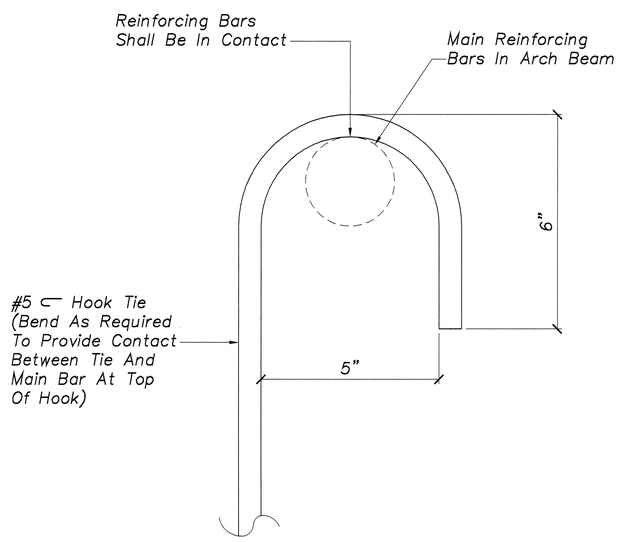

S-2, S-13, S-16, S-18, S-19 A S-16 TYPICAL TIE DETAIL
Not To Scale

ORIGINAL PLAN
NOTE BOOK No.
SURVEY PLOTTED BY
DRAWN BY
TRACED BY
DESIGNED BY
QUANTITIES BY
CHECKED BY
DATE

GRAPHIC SCALES
0 2' 4' 6' 8'
SCALE: 3/8" = 1'-0"

GEORGE K. NISHIMURA LICENSED PROFESSIONAL ENGINEER No. 1385-S HAWAII, U.S.A.

THIS WORK WAS PREPARED BY ME OR UNDER MY SUPERVISION.

STATE OF HAWAII
DEPARTMENT OF TRANSPORTATION
HIGHWAYS DIVISION
FOUNDATION SECTIONS

HAWAII BELT ROAD
KUPAPAULUA BRIDGE WIDENING
HAMAKUA DISTRICT
Federal Aid Project No. BR-019-2(38)

SCALE: AS NOTED DATE: OCT., 2001

SHEET No. S-16 OF 30 SHEETS

FED. ROAD DIST. NO.	STATE	FED. AID PROJ. NO.	FISCAL YEAR	SHEET NO.	TOTAL SHEETS
HAWAII	HAW.	BR-019-2(38)	2002	60	73

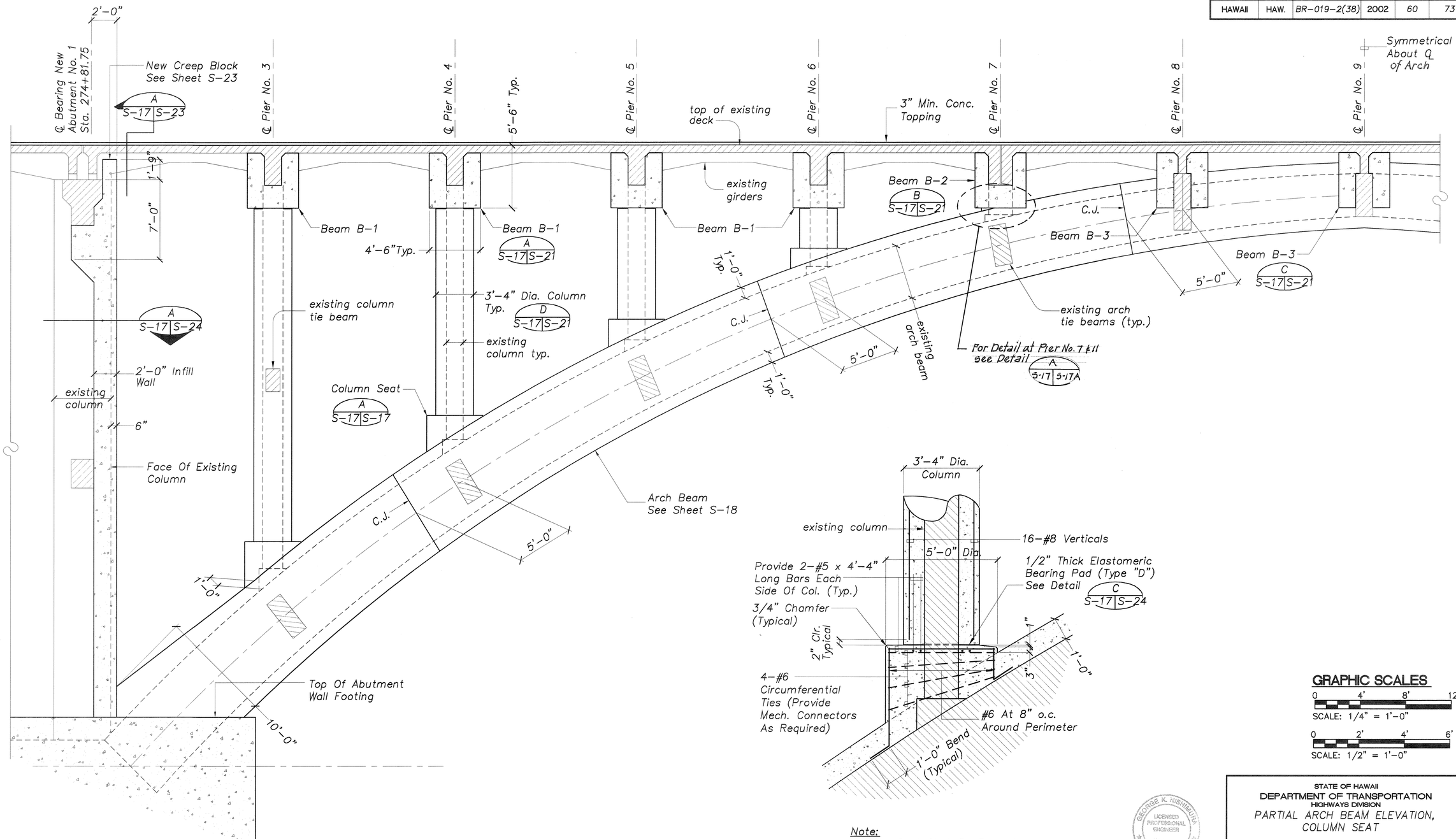

1 S-7, S-8 S-17 PARTIAL SECTION AT CENTERLINE NEW ROADWAY
Scale: 1/4"=1'-0"

Note:
Column Seat Shall Be Poured Monolithically With Arch Beam.

A S-17 S-17 TYPICAL COLUMN SEAT
Scale: 1/2"=1'-0"

GRAPHIC SCALES
0 4' 8' 12'
SCALE: 1/4" = 1'-0"
0 2' 4' 6'
SCALE: 1/2" = 1'-0"

GEORGE K. NISHIMURA LICENSED PROFESSIONAL ENGINEER No. 13668-S HAWAII, U.S.A.

THIS WORK WAS PREPARED BY ME OR UNDER MY SUPERVISION.

STATE OF HAWAII
DEPARTMENT OF TRANSPORTATION
HIGHWAYS DIVISION
PARTIAL ARCH BEAM ELEVATION, COLUMN SEAT

HAWAII BELT ROAD
KUPAPAULUA BRIDGE WIDENING
HAMAKUA DISTRICT
Federal Aid Project No. BR-019-2(38)

SCALE: AS NOTED DATE: OCT., 2001

SHEET No. S-17 OF 30 SHEETS

ORIGINAL PLAN | SURVEY PLOTTED BY | DRAWN BY | TRACED BY | DESIGNED BY | QUANTITIES BY | CHECKED BY | DATE | NOTE BOOK | No.

"AS-BUILT"

FED. ROAD DIST. NO.	STATE	FED. AID PROJ. NO.	FISCAL YEAR	SHEET NO.	TOTAL SHEETS
HAWAII	HAW.	BR-019-2(38)	2001	60 S-1	73

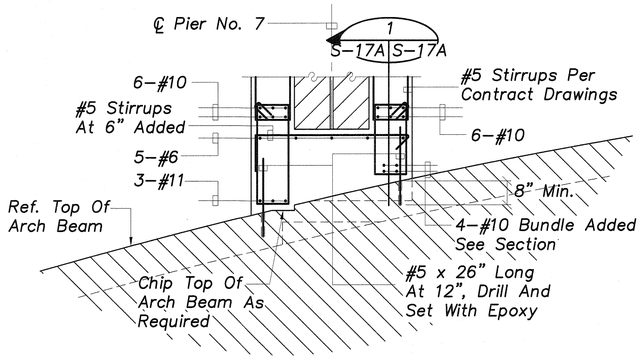

PARTIAL DETAIL AT PIER NO. 7

1 S-17 S-17A S-21 Scale: 1/2"=1'-0"

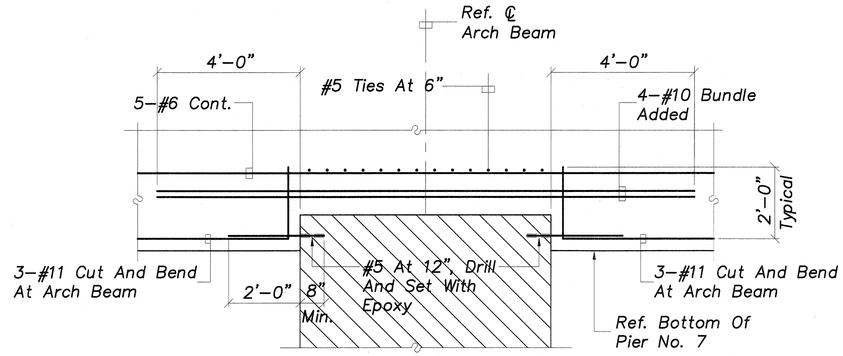

Note:
Stirrups Not Shown, See Contract Drawings For Size And Spacing.

SECTION

1 S-17A S-17A Scale: 1/2"=1'-0"

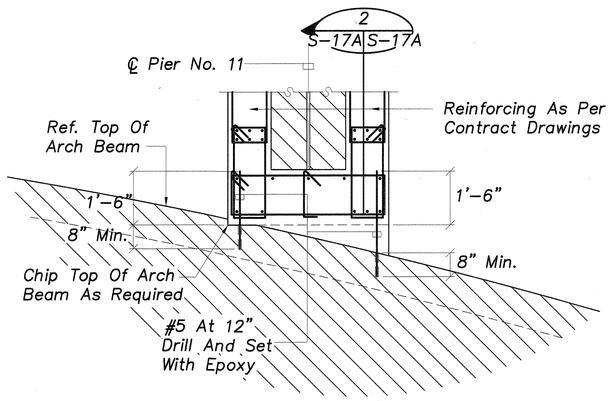

PARTIAL DETAIL AT PIER NO. 11

A S-17 S-17A S-21 Scale: 1/2"=1'-0"

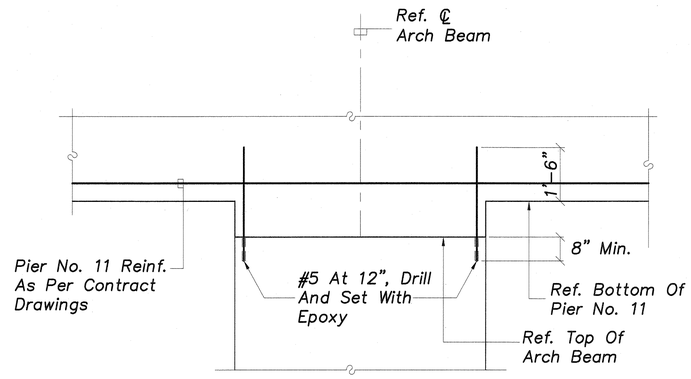

SECTION

2 S-17A S-17A Scale: 1/2"=1'-0"

Note:
This Tracing Prepared During "As-Built" Posting

GRAPHIC SCALES

0 2' 4' 6'

SCALE: 1/2" = 1'-0"

STATE OF HAWAII
DEPARTMENT OF TRANSPORTATION
HIGHWAYS DIVISION

PARTIAL SECTION AT PIER NO. 7 AND NO. 11

HAWAII BELT ROAD
KUPAPAULUA BRIDGE WIDENING
HAMAKUA DISTRICT
Federal Aid Project No. BR-019-2(38)

SCALE: AS NOTED DATE: OCT., 2001

SHEET No. S-17A OF 30 SHEETS

ORIGINAL PLAN | SURVEY PLOTTED BY | SURVEY TRIAL BY | TRACED BY | DESIGNED BY | QUANTITIES BY | CHECKED BY | DATE | NOTE BOOK No.

"AS-BUILT"

FED. ROAD DIST. NO.	STATE	FED. AID PROJ. NO.	FISCAL YEAR	SHEET NO.	TOTAL SHEETS
HAWAII	HAW.	BR-019-2(38)	2002	61	73

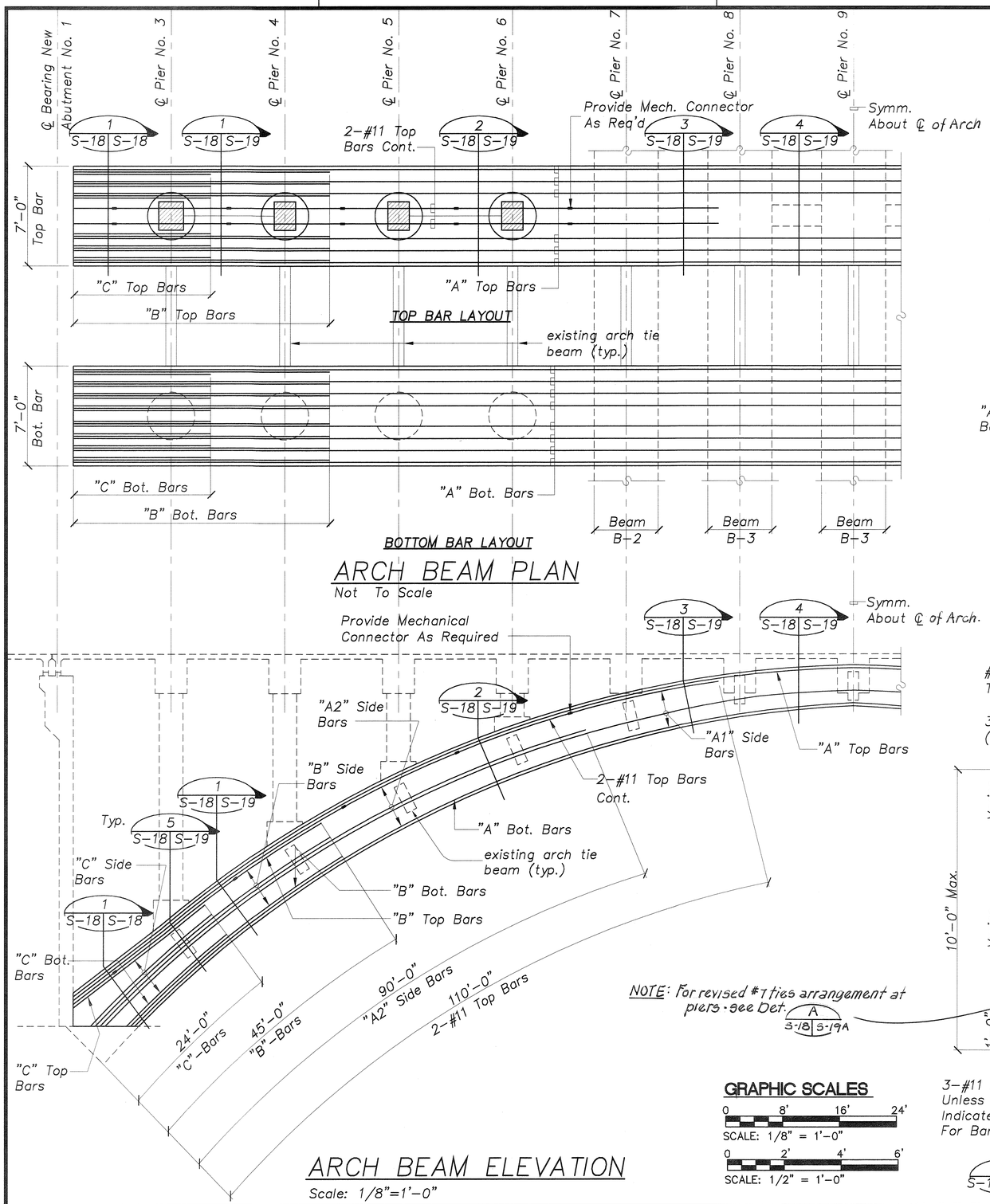

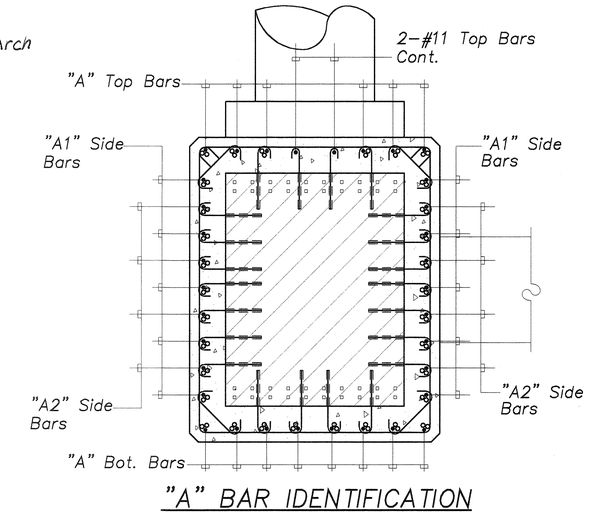

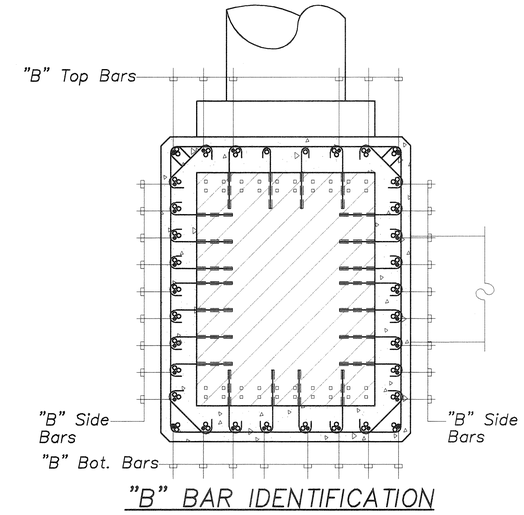

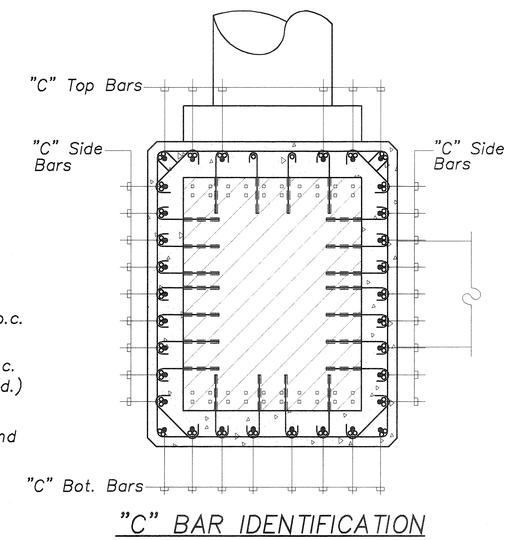

Note:
Refer To "Typical Tie Detail" A/S-16 For Clarification of Tie Placement

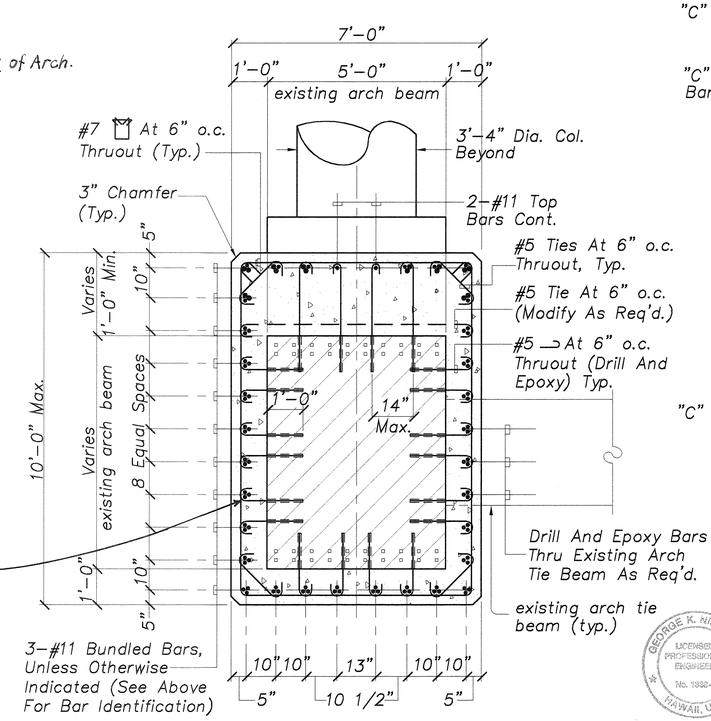

NOTE: For revised #7 ties arrangement at piers - see Det. A (S-18 | S-19A)

GRAPHIC SCALES

0 8' 16' 24'
SCALE: 1/8" = 1'-0"

0 2' 4' 6'
SCALE: 1/2" = 1'-0"

ORIGINAL PLAN	SURVEY PLOTTED BY: DRAWN BY: TRACED BY: DESIGNED BY: QUANTITIES BY: CHECKED BY:	DATE
NOTE BOOK		
No.		

GEORGE K. NISHIMURA LICENSED PROFESSIONAL ENGINEER No. 1932-3 HAWAII, U.S.A.

THIS WORK WAS PREPARED BY ME OR UNDER MY SUPERVISION.

STATE OF HAWAII
DEPARTMENT OF TRANSPORTATION
HIGHWAYS DIVISION

ARCH BEAM PLAN, ARCH BEAM ELEVATION, ARCH BEAM SECTIONS

HAWAII BELT ROAD
KUPAPAULUA BRIDGE WIDENING
HAMAKUA DISTRICT
Federal Aid Project No. BR-019-2(38)

SCALE: AS NOTED DATE: OCT., 2001

SHEET No. S-18 OF 30 SHEETS

"AS-BUILT"

FED. ROAD DIST. NO.	STATE	FED. AID PROJ. NO.	FISCAL YEAR	SHEET NO.	TOTAL SHEETS
HAWAII	HAW.	BR-019-2(38)	2002	62	73

NOTE: For revised #7 ties arrangement at piers - see Det. A (S-19 | S-19A)

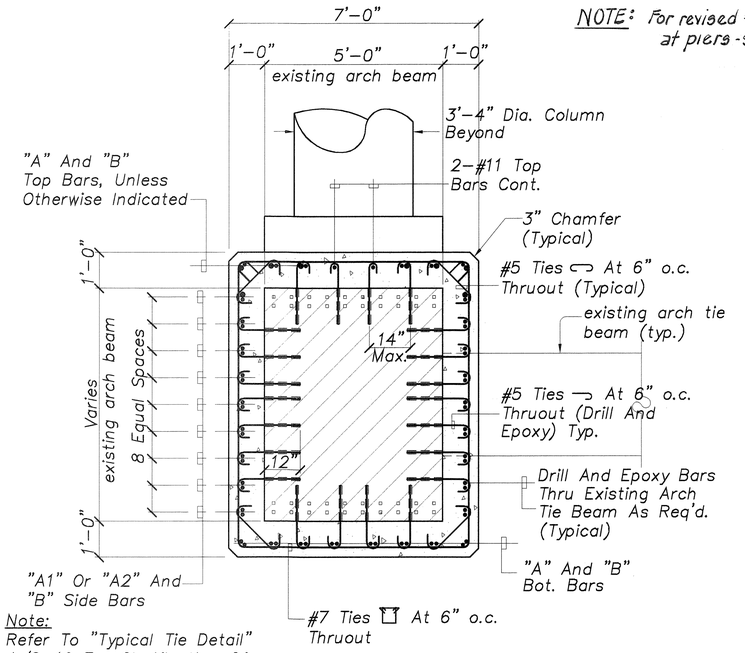

Note:
Refer To "Typical Tie Detail" A/S-16 For Clarification Of Tie Placement

1 ARCH BEAM SECTION
S-18 | S-19 Scale: 1/2"=1'-0"

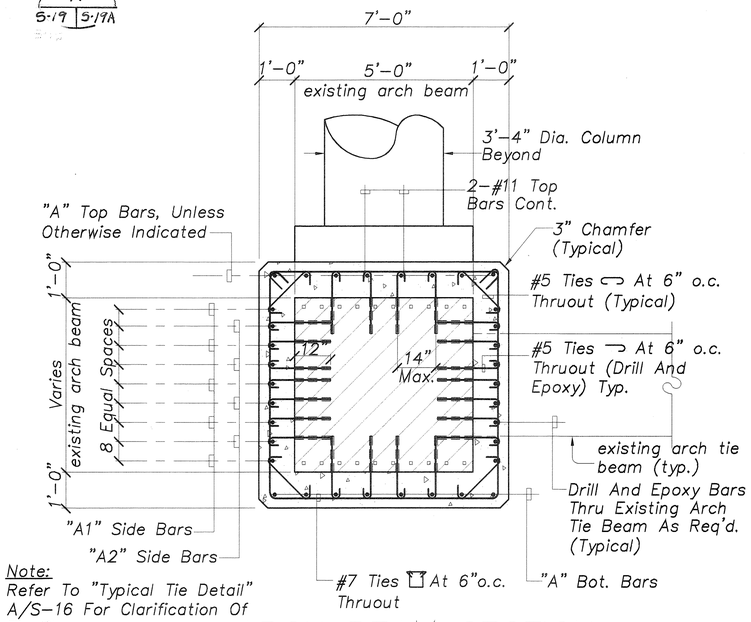

Note:
Refer To "Typical Tie Detail" A/S-16 For Clarification Of Tie Placement

2 ARCH BEAM SECTION
S-18 | S-19 Scale: 1/2"=1'-0"

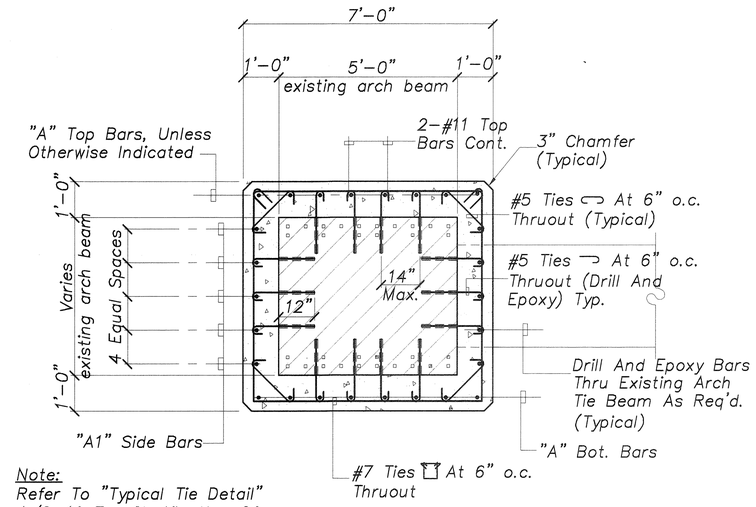

Note:
Refer To "Typical Tie Detail" A/S-16 For Clarification Of Tie Placement

3 ARCH BEAM SECTION
S-18 | S-19 Scale: 1/2"=1'-0"

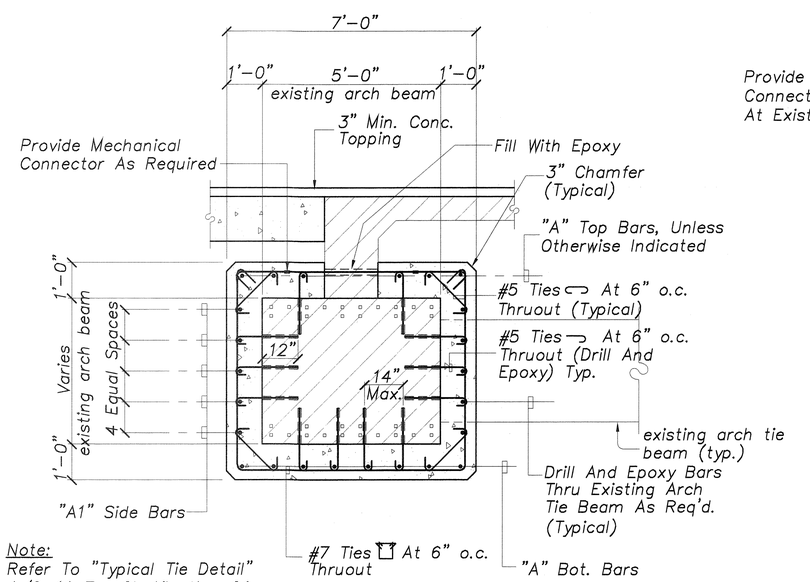

Note:
Refer To "Typical Tie Detail" A/S-16 For Clarification Of Tie Placement

4 ARCH BEAM SECTION
S-18 | S-19 Scale: 1/2"=1'-0"

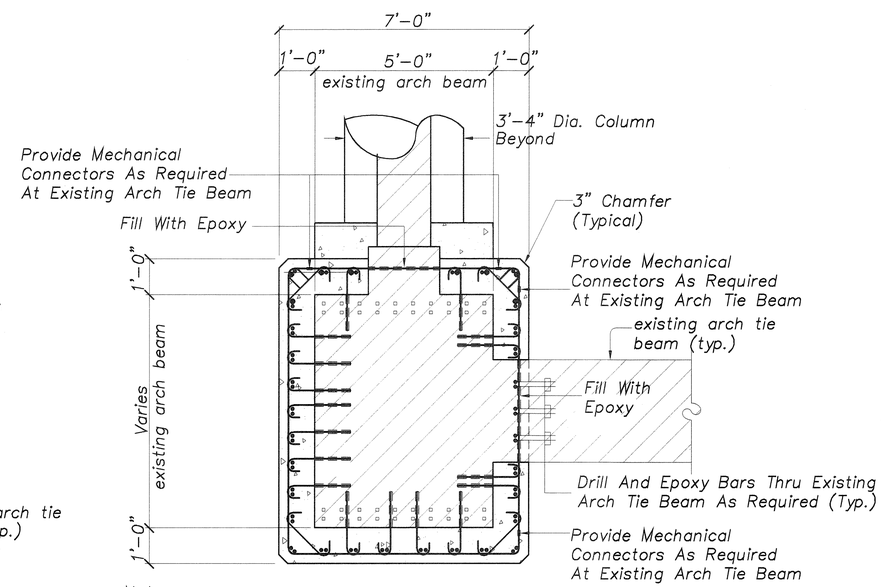

Note:
1. Hook Ties May Be Omitted Where Placement Is Not Possible At Existing Arch Tie Beam.
2. Refer To "Typical Tie Detail" A/S-16 For Clarification Of Tie Placement

5 ARCH BEAM / TIE BEAM SECTION
S-18 | S-19 Scale: 1/2"=1'-0"

GRAPHIC SCALES
0 2' 4' 6'
SCALE: 1/2" = 1'-0"

SURVEY PLOTTED BY	DATE
DRAWN BY	
TRACED BY	
DESIGNED BY	
QUANTITIES BY	
CHECKED BY	
ORIGINAL PLAN	
NOTE BOOK	
No.	

GEORGE K. NISHIMURA LICENSED PROFESSIONAL ENGINEER No. 1888-S HAWAII, U.S.A.

THIS WORK WAS PREPARED BY ME OR UNDER MY SUPERVISION.

STATE OF HAWAII
DEPARTMENT OF TRANSPORTATION
HIGHWAYS DIVISION
ARCH BEAM SECTIONS

HAWAII BELT ROAD
KUPAPAULUA BRIDGE WIDENING
HAMAKUA DISTRICT
Federal Aid Project No. BR-019-2(38)

SCALE: AS NOTED DATE: OCT., 2001

SHEET No. S-19 OF 30 SHEETS

"AS-BUILT"

FED. ROAD DIST. NO.	STATE	FED. AID PROJ. NO.	FISCAL YEAR	SHEET NO.	TOTAL SHEETS
HAWAII	HAW.	BR-019-2(38)	2001	62 S-1	73

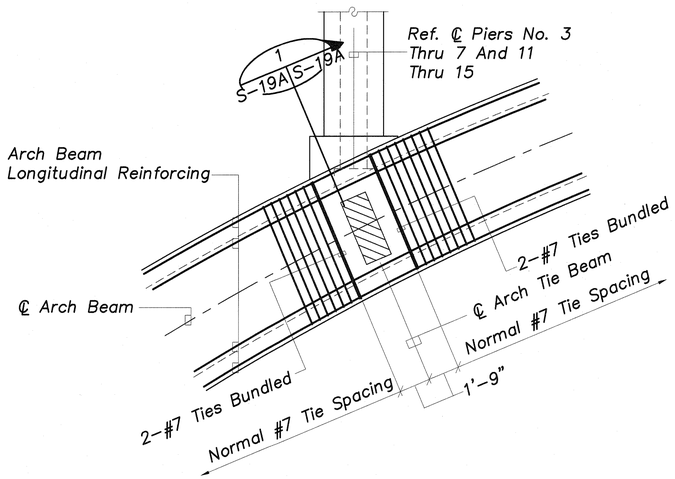

PARTIAL ELEVATION

Scale: 1/4"=1'-0"

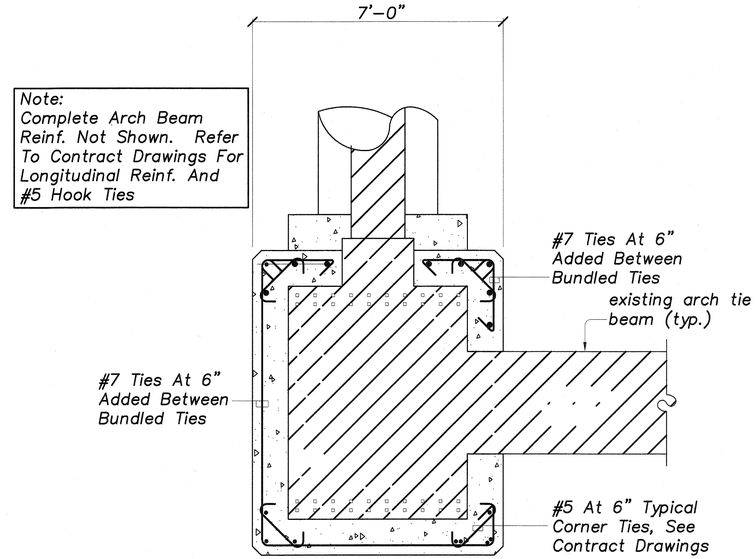

1 SECTION

S-19A S-19A Scale: 1/2"=1'-0"

A REVISE #7 TIES ARRANGEMENT IN ARCH BEAM AT PIERS

S-18 S-19A Scale: As Noted
S-19

Note:
This Tracing Prepared During
"As-Built" Posting

GRAPHIC SCALES

0 4' 8' 12'
SCALE: 1/4" = 1'-0"

0 2' 4' 6'
SCALE: 1/2" = 1'-0"

STATE OF HAWAII
DEPARTMENT OF TRANSPORTATION
HIGHWAYS DIVISION

ARCH BEAM SECTIONS AT PIERS

HAWAII BELT ROAD
KUPAPAULUA BRIDGE WIDENING
HAMAKUA DISTRICT
Federal Aid Project No. BR-019-2(38)

SCALE: AS NOTED DATE: OCT., 2001

SHEET No. S-19A OF 30 SHEETS

ORIGINAL PLAN	SURVEY PLOTTED BY	DATE
	TRACED BY	
NOTE BOOK	DESIGNED BY	
	QUANTITIES BY	
No.	CHECKED BY	

"AS-BUILT"

FED. ROAD DIST. NO.	STATE	FED. AID PROJ. NO.	FISCAL YEAR	SHEET NO.	TOTAL SHEETS
HAWAII	HAW.	BR-019-2(38)	2002	63A	79

Note:
Pier No. Refers To Existing Identification Number.

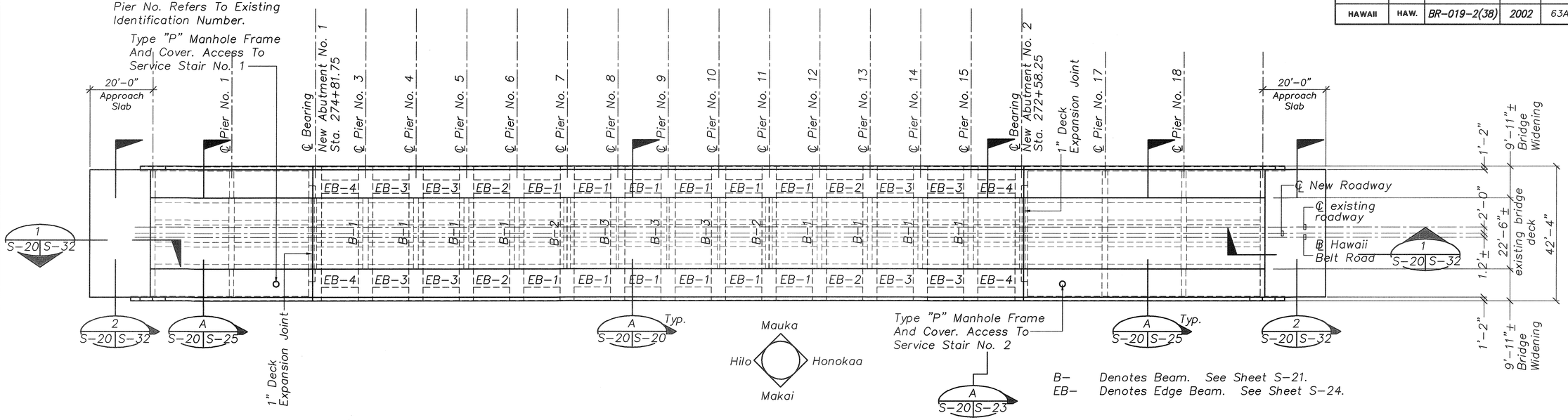

B– Denotes Beam. See Sheet S-21.
EB– Denotes Edge Beam. See Sheet S-24.

BRIDGE DECK FRAMING PLAN

Scale: 1/16"=1'-0"

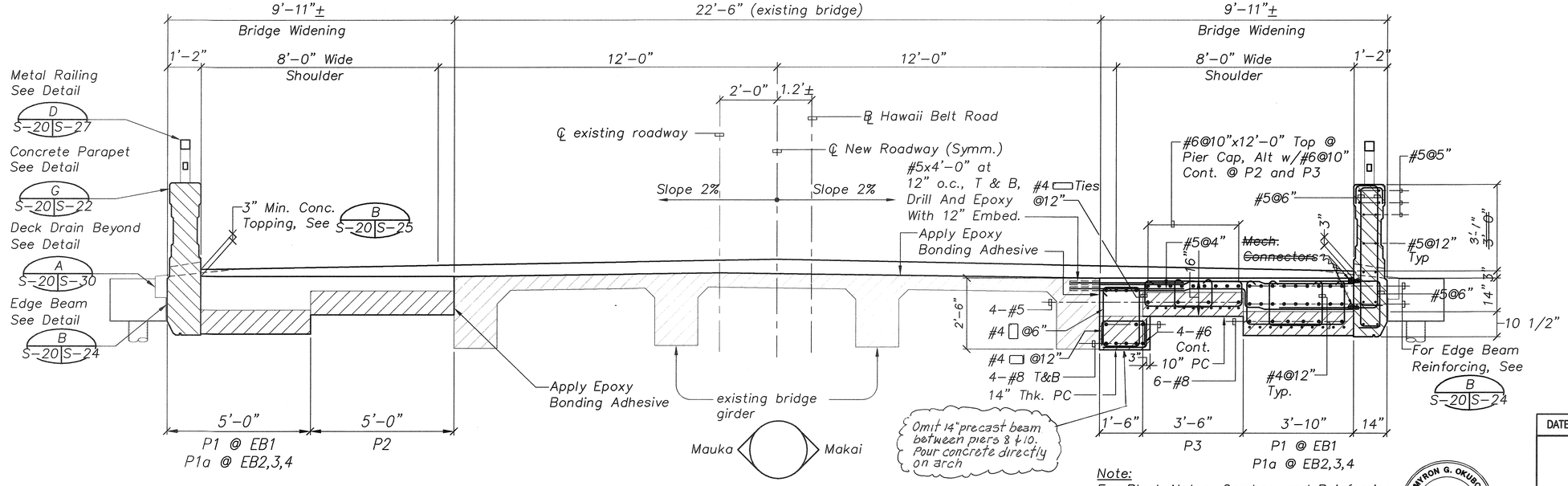

TYPICAL DECK SECTION

A S-20 S-20 Scale: 1/2"=1'-0"

Note:
For Plank Notes, Camber, and Reinforcing, See Sheet S-31.

MYRON G. OKUBO LICENSED PROFESSIONAL ENGINEER No. 4320-S HAWAII, U.S.A.

THIS WORK WAS PREPARED BY ME OR UNDER MY SUPERVISION

Myron Okubo

GRAPHIC SCALES

0 16' 32' 48'
SCALE: 1/16" = 1'-0"

0 2' 4' 6'
SCALE: 1/2" = 1'-0"

DATE	REVISION

STATE OF HAWAII
DEPARTMENT OF TRANSPORTATION
HIGHWAYS DIVISION

BRIDGE DECK FRAMING PLAN, TYPICAL DECK SECTION
HAWAII BELT ROAD
KUPAPAULUA BRIDGE WIDENING
HAMAKUA DISTICT
Federal Aid Project No. BR-019-2(38)

Scale: As Noted Date: June 23, 2003

SHEET No. S-20 OF 36 SHEETS

ORIGINAL PLAN | SURVEY PLOTTED BY | DRAWN BY | TRACED BY | DESIGNED BY | QUANTITIES BY | CHECKED BY | DATE
NOTEBOOK No.

Path: L:\WOA\6670-01 Kupapaulua Bridge\Downsp Filename: S20 Plot date: Sep 25, 2006-07:54:24pm CAD User: skidani. Xref Filename: | Border | AUTODATE |

"AS-BUILT"

FED. ROAD DIST. NO.	STATE	FED. AID PROJ. NO.	FISCAL YEAR	SHEET NO.	TOTAL SHEETS
HAWAII	HAW.	BR-019-2(38)	2002	64A	79

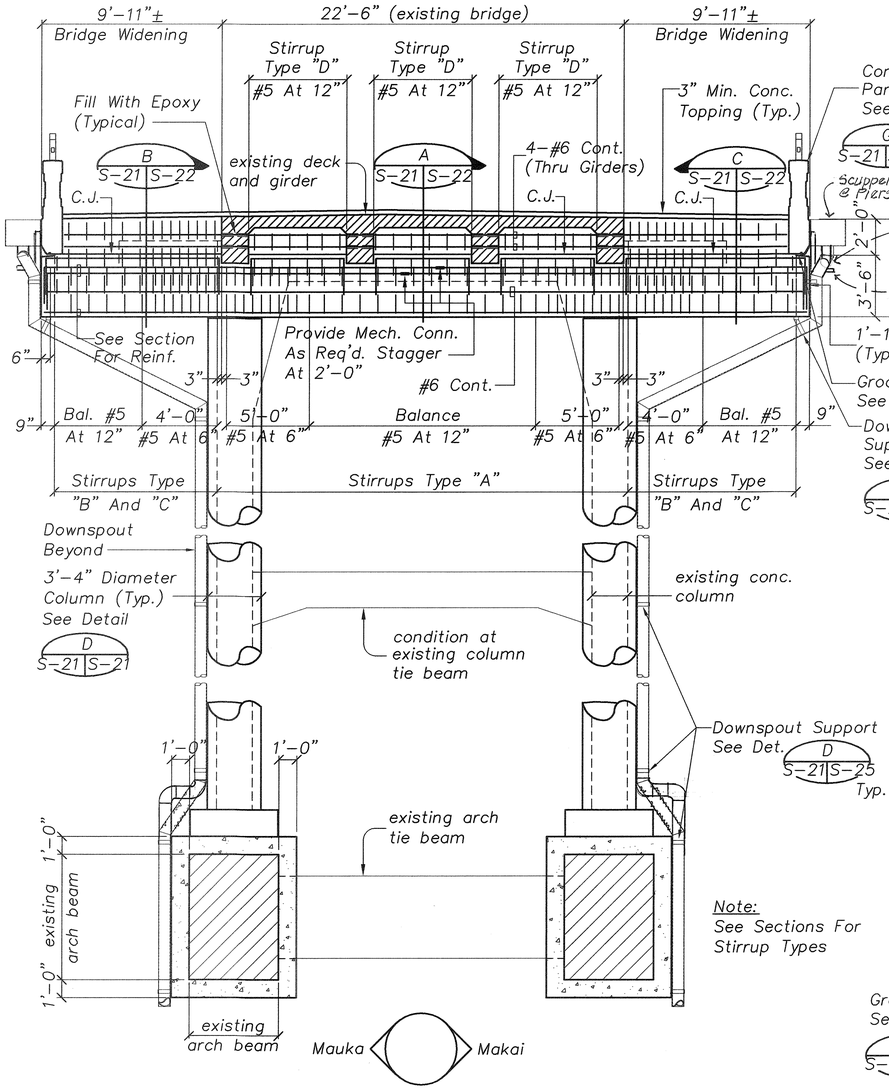

TYPICAL BEAM B-1 ELEVATION

S-17, S-20|S-21 Scale: 1/4"=1'-0" (DOWNSPOUT DETAIL AT PIER 3 & 15)

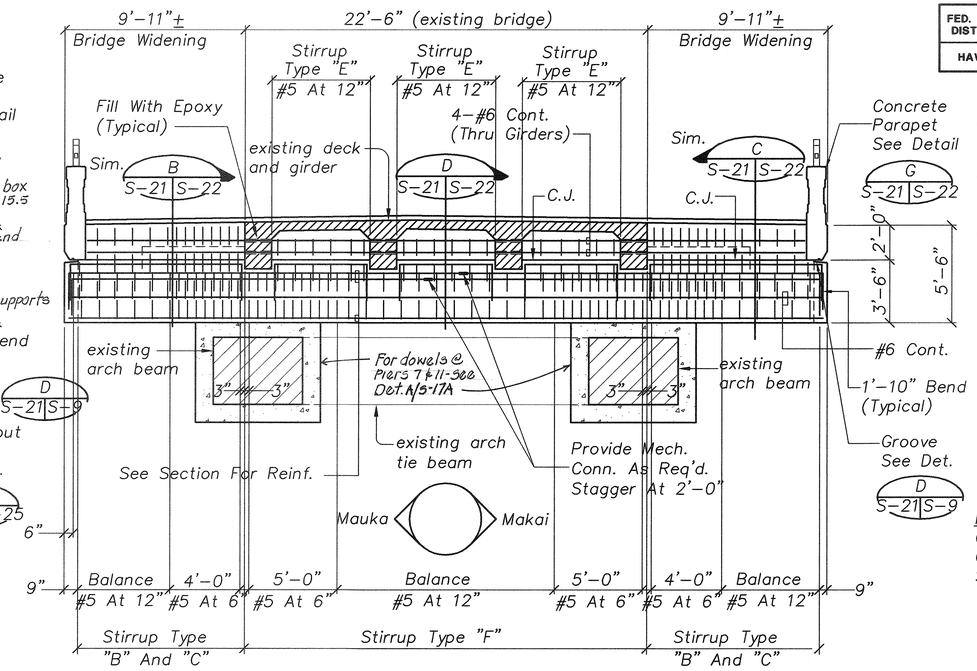

TYPICAL BEAM B-2 ELEVATION

S-17, S-20|S-21 Scale: 1/4"=1'-0"

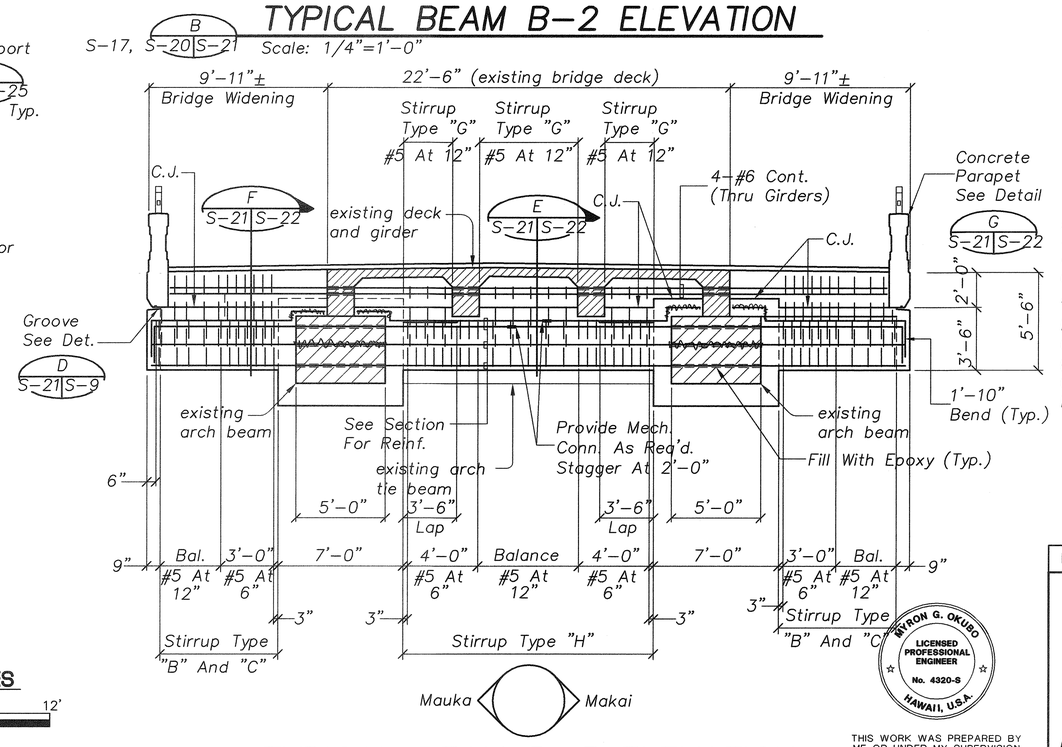

TYPICAL BEAM B-3 ELEVATION

S-17, S-20|S-21 Scale: 1/4"=1'-0"

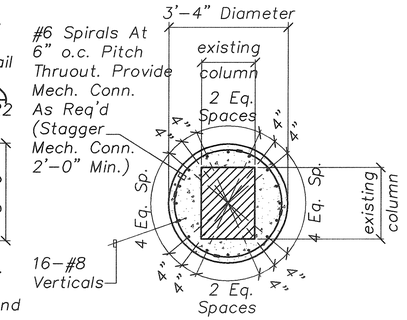

TYPICAL SECTION

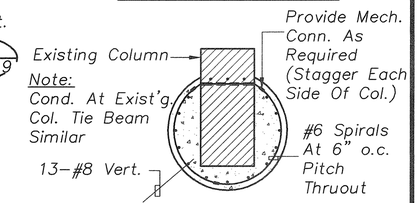

SECTION AT TOP

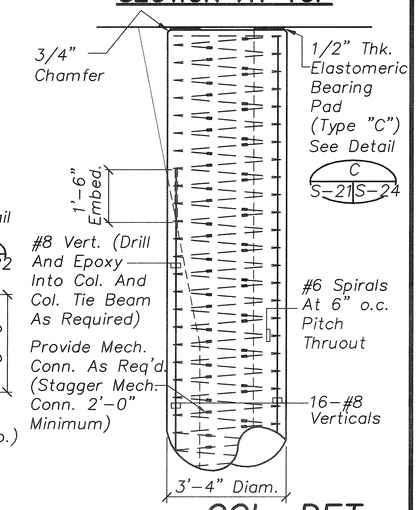

COL. DET.

S-17, S-21|S-21 Scale: 1/2"=1'-0"

GRAPHIC SCALES

0 4' 8' 12'
SCALE: 1/4" = 1'-0"

0 2' 4' 6'
SCALE: 1/2" = 1'-0"

DATE	REVISION

STATE OF HAWAII
DEPARTMENT OF TRANSPORTATION
HIGHWAYS DIVISION

TYPICAL BEAM ELEVATIONS, COLUMN DETAIL
HAWAII BELT ROAD
KUPAPAULUA BRIDGE WIDENING
HAMAKUA DISTICT
Federal Aid Project No. BR-019-2(38)

Scale: As Noted Date: June 23, 2003

MYRON G. OKUBO LICENSED PROFESSIONAL ENGINEER No. 4320-S HAWAII, U.S.A.

THIS WORK WAS PREPARED BY ME OR UNDER MY SUPERVISION

Myron Okubo

SHEET No. S-21 OF 36 SHEETS

ORIGINAL PLAN | SURVEY PLOTTED BY | DRAWN BY | TRACED BY | DESIGNED BY | QUANTITIES BY | CHECKED BY | DATE
NOTEBOOK No.

"AS-BUILT"

FED. ROAD DIST. NO.	STATE	FED. AID PROJ. NO.	FISCAL YEAR	SHEET NO.	TOTAL SHEETS
HAWAII	HAW.	BR-019-2(38)	2002	65A	79

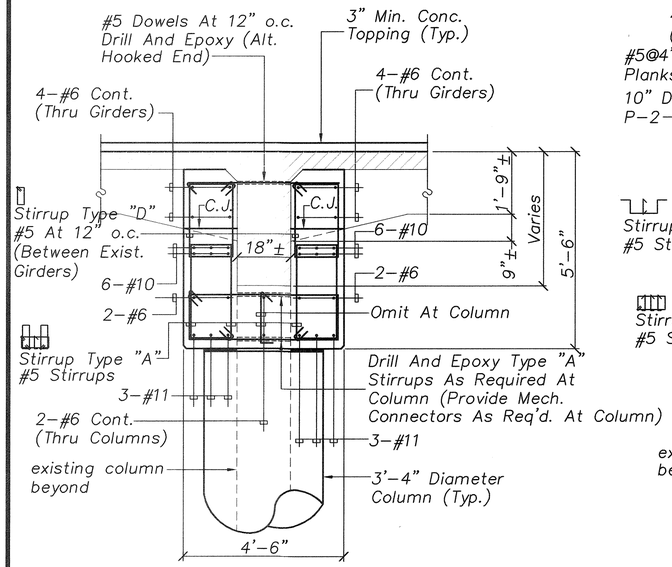

A SECTION
S-21 S-22 Scale: 1/2"=1'-0"

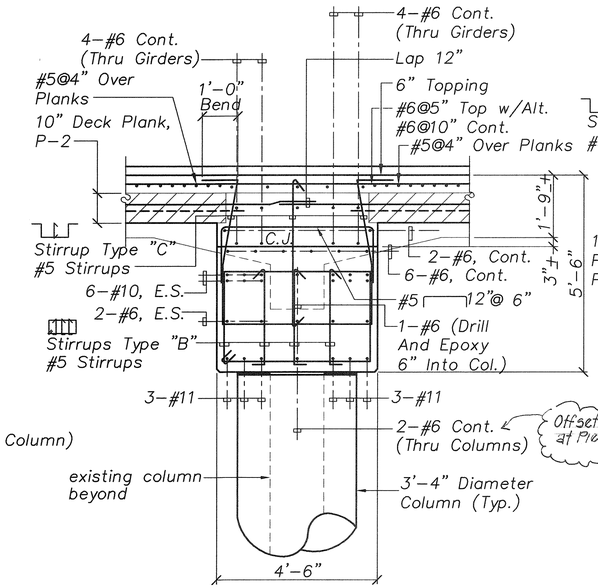

B SECTION
S-21 S-22 Scale: 1/2"=1'-0"

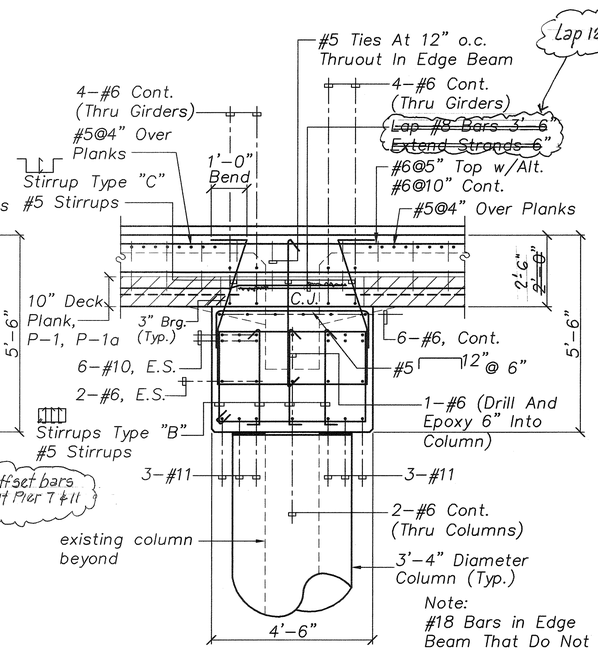

Note:
#18 Bars in Edge Beam That Do Not Continue Shall Be Terminated At CL Pier.

C SECTION
S-21 S-22 Scale: 1/2"=1'-0"

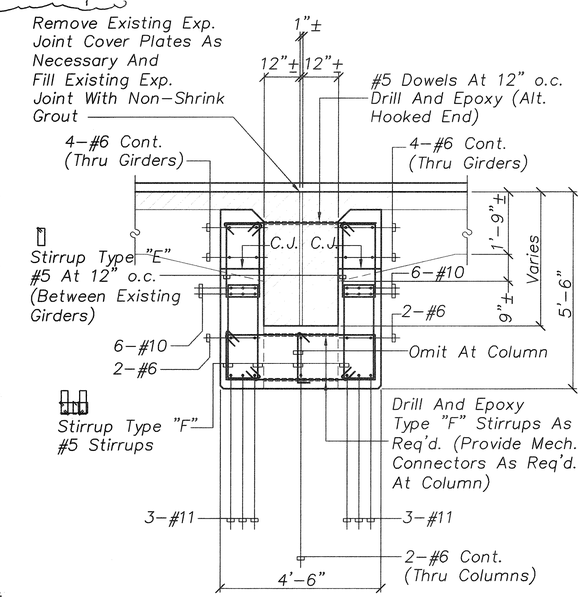

D SECTION
S-21 S-22 Scale: 1/2"=1'-0"

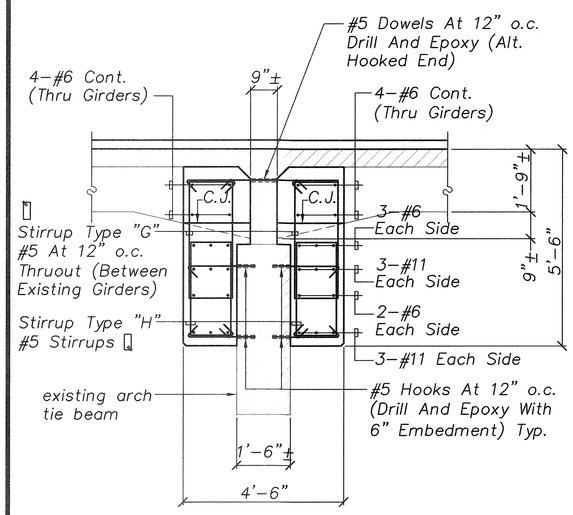

E SECTION
S-21 S-22 Scale: 1/2"=1'-0"

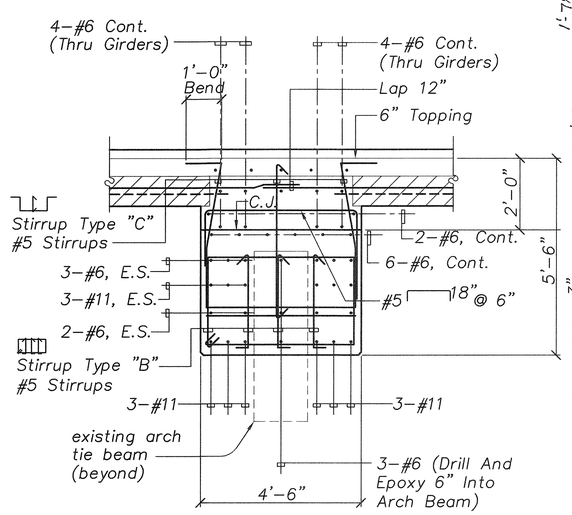

F SECTION
S-21 S-22 Scale: 1/2"=1'-0"

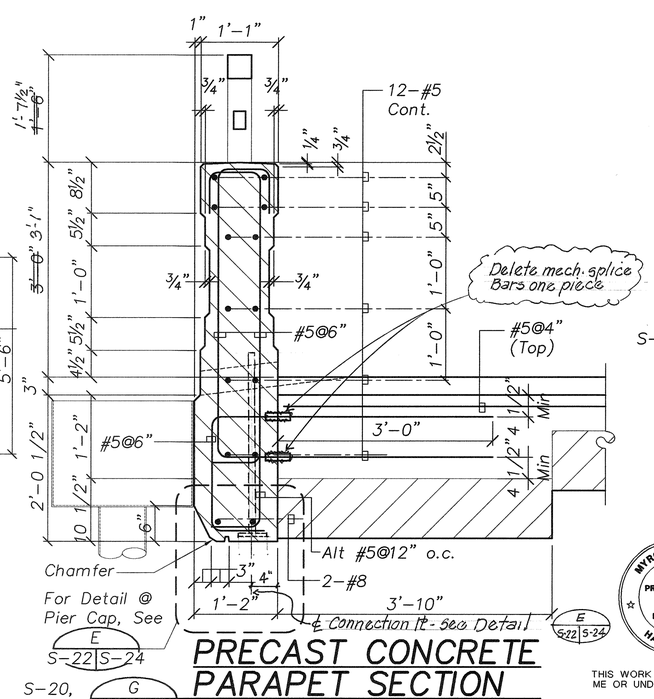

S-20, S-21, G S-25 S-22 Scale: 1"=1'-0"

PRECAST CONCRETE PARAPET SECTION

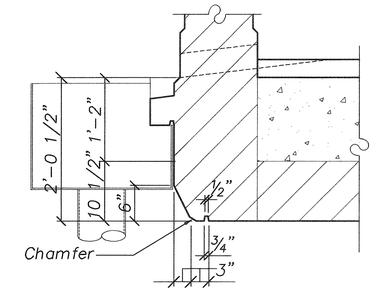

H CONT. DRIP DETAIL
S-24, S-22 S-22 Scale: 1"=1'-0"

GRAPHIC SCALES
0 2' 4' 6'
SCALE: 1/2" = 1'-0"
0 1' 2' 3'
SCALE: 1" = 1'-0"

MYRON G. OKUBO
LICENSED PROFESSIONAL ENGINEER
No. 4320-S
HAWAII, U.S.A.

THIS WORK WAS PREPARED BY ME OR UNDER MY SUPERVISION

Myron Okubo

DATE	REVISION

STATE OF HAWAII
DEPARTMENT OF TRANSPORTATION
HIGHWAYS DIVISION

BEAM SECTIONS, CONCRETE PARAPET, AND DRIP DETAIL
HAWAII BELT ROAD
KUPAPAULUA BRIDGE WIDENING
HAMAKUA DISTICT
Federal Aid Project No. BR-019-2(38)

Scale: As Noted Date: June 23, 2003

SHEET No. S-22 OF 36 SHEETS

ORIGINAL PLAN | SURVEY PLOTTED BY | DRAWN BY | TRACED BY | DESIGNED BY | QUANTITIES BY | CHECKED BY | DATE
NOTEBOOK No.

Path: L:\WOA\6670-01 Kupapaulua Bridge\Downsp Filename: S22 Plot date: Sep 25, 2006-07:57:22pm CAD User: skidani, Xref Filename: | Border | AUTODATE |

"AS-BUILT"

FED. ROAD DIST. NO.	STATE	FED. AID PROJ. NO.	FISCAL YEAR	SHEET NO.	TOTAL SHEETS
HAWAII	HAW.	BR-019-2(38)	2002	66A	79

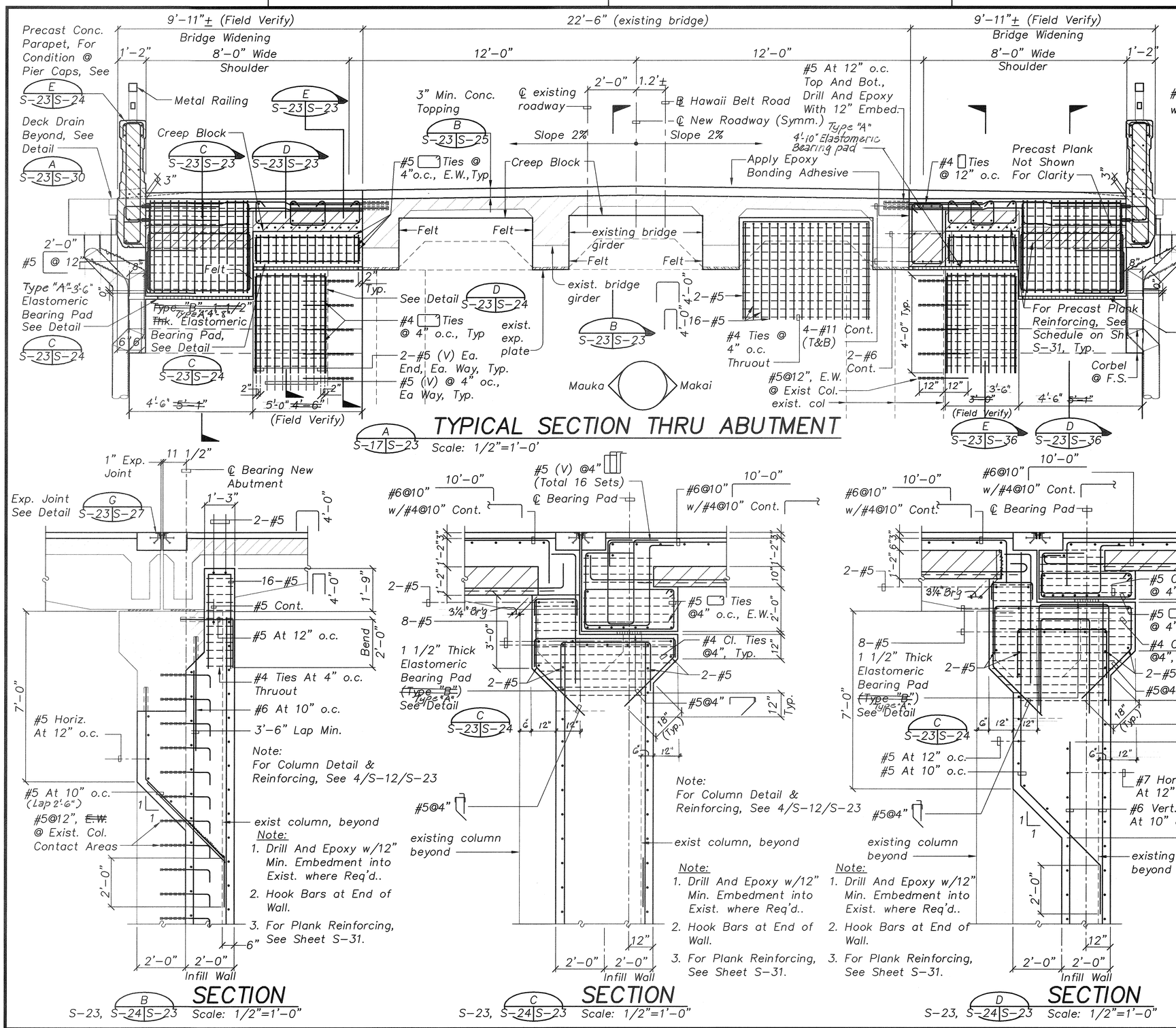

TYPICAL SECTION THRU ABUTMENT

A S-17|S-23 Scale: 1/2"=1'-0'

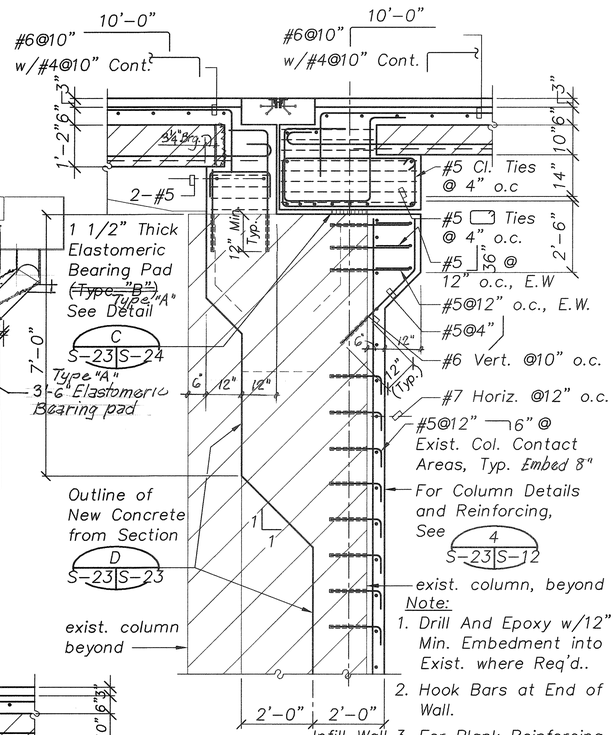

Note:
1. Drill And Epoxy w/12" Min. Embedment into Exist. where Req'd..
2. Hook Bars at End of Wall.
3. For Plank Reinforcing, See Sheet S-31.

SECTION

E S-23, S-24|S-23 Scale: 1/2"=1'-0"

SECTION

B S-23, S-24|S-23 Scale: 1/2"=1'-0"

SECTION

C S-23, S-24|S-23 Scale: 1/2"=1'-0"

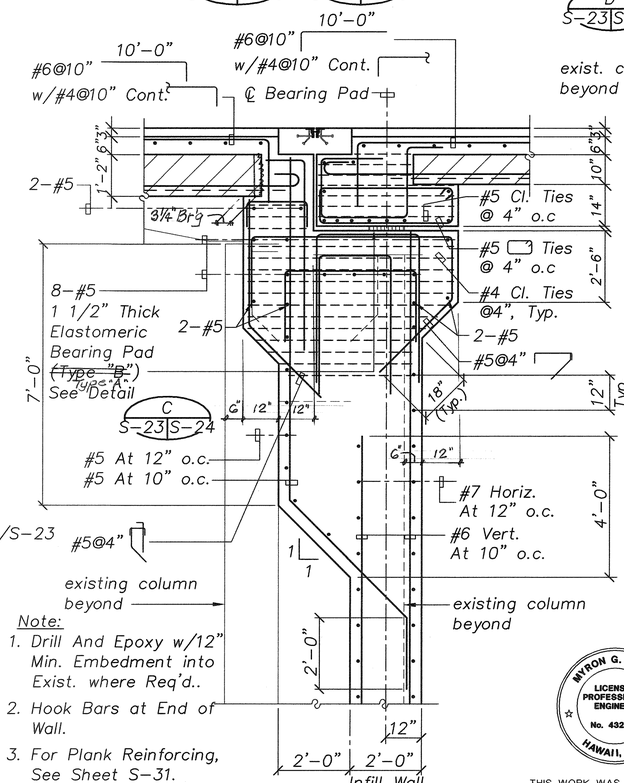

SECTION

D S-23, S-24|S-23 Scale: 1/2"=1'-0"

GRAPHIC SCALES

0 2' 4' 6'

SCALE: 1/2" = 1'-0"

DATE	REVISION

STATE OF HAWAII
DEPARTMENT OF TRANSPORTATION
HIGHWAYS DIVISION

ABUTMENT WALL SECTIONS

HAWAII BELT ROAD
KUPAPAULUA BRIDGE WIDENING
HAMAKUA DISTICT
Federal Aid Project No. BR-019-2(38)

Scale: As Noted Date: June 23, 2003

MYRON G. OKUBO LICENSED PROFESSIONAL ENGINEER No. 4320-S HAWAII, U.S.A.

THIS WORK WAS PREPARED BY ME OR UNDER MY SUPERVISION

Myron Okubo

SHEET No. S-23 OF 36 SHEETS

"AS-BUILT"

66A

ORIGINAL PLAN | NOTEBOOK | No. ____ | SURVEY PLOTTED BY | DRAWN BY | TRACED BY | DESIGNED BY | QUANTITIES BY | CHECKED BY | DATE

Path: L:\WOA\6670-01 Kupapaulua Bridge\Downsp Filename: S23 Plot date: Sep 25, 2006-07:57:47pm CAD User: skidani. Xref Filename: | Border | AUTODATE |

FED. ROAD DIST. NO.	STATE	FED. AID PROJ. NO.	FISCAL YEAR	SHEET NO.	TOTAL SHEETS
HAWAII	HAW.	BR-019-2(38)	2002	67A	79

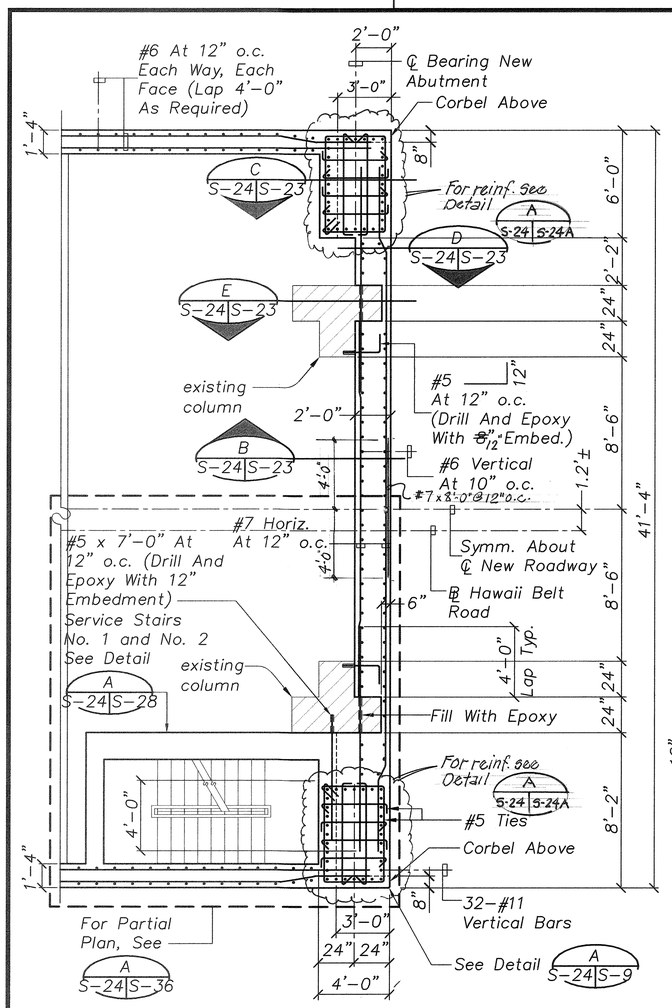

ABUT. WALL SECTION

S-11, S-12
S-14, S-17, A S-29 S-24 Scale: 1/4"=1'-0"

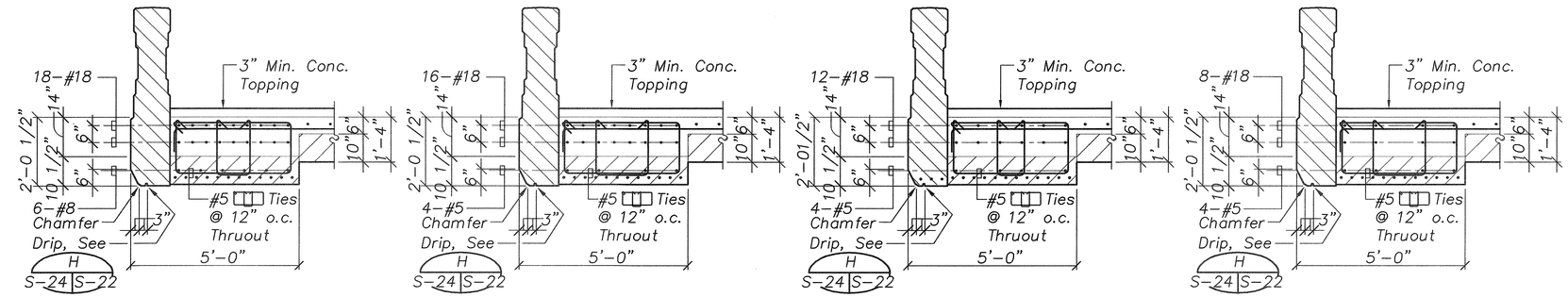

EDGE BEAM EB-1 EDGE BEAM EB-2 EDGE BEAM EB-3 EDGE BEAM EB-4

EDGE BEAM DETAIL

B S-20 S-24 Scale: 1/2"=1'-0"

Note:
Refer To Section C/S-22 For Stop Location Of #18 Bars That Do Not Continue.

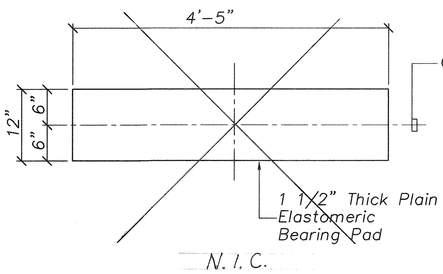

~~TYPE "A"~~

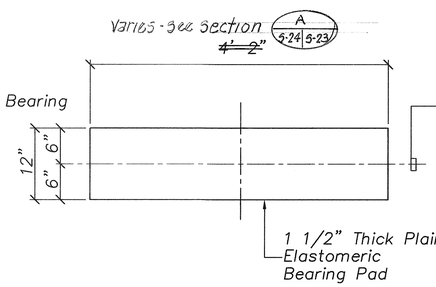

TYPE "A"
~~TYPE "B"~~

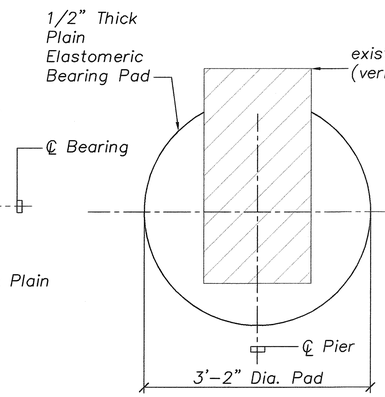

TYPE "C"

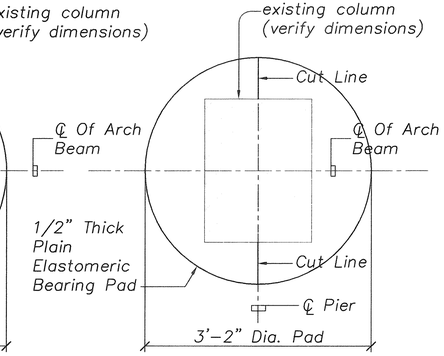

TYPE "D"

ELASTOMERIC BEARING PAD DETAILS

S-17, S-21, C S-23 S-24 Scale: 1"=1'-0"

GRAPHIC SCALES

0 4' 8' 12'
SCALE: 1/4" = 1'-0"

0 2' 4' 6'
SCALE: 1/2" = 1'-0"

0 1' 2' 3' 4'
SCALE: 3/4" = 1'-0"

0 1' 2' 3'
SCALE: 1" = 1'-0"

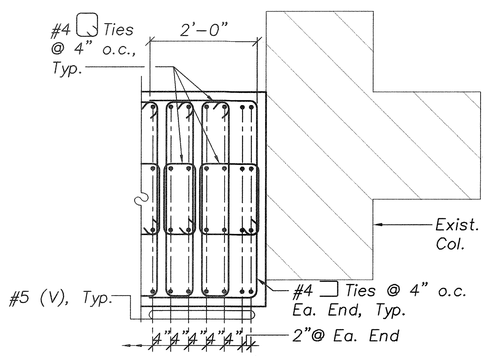

PLAN – DETAIL

D S-23 S-24 Scale: 3/4"=1'-0"

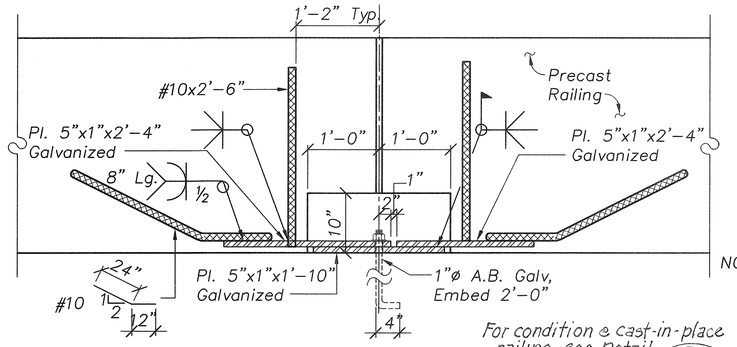

For condition @ cast-in-place railing - see Detail F S-24 S-24

DETAIL

E S-23 S-24 Scale: 1"=1'-0"

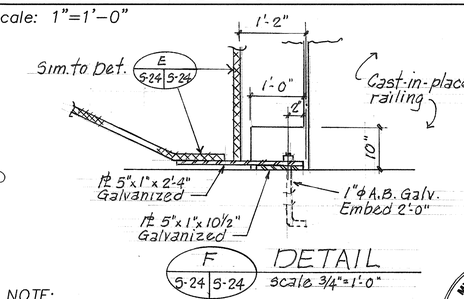

F S-24 S-24 DETAIL scale 3/4"=1'-0"

NOTE:
1. Welded Reinforcing Steel Shall Conform to ASTM A706.
2. Patch Opening after Attaching Precast Railings to Deck.

MYRON G. OKUBO LICENSED PROFESSIONAL ENGINEER No. 4320-S HAWAII, U.S.A.

THIS WORK WAS PREPARED BY ME OR UNDER MY SUPERVISION

Myron Okubo

DATE	REVISION

STATE OF HAWAII
DEPARTMENT OF TRANSPORTATION
HIGHWAYS DIVISION

ABUT. WALL SECTION, EDGE BEAM DETAILS & ELASTIMERIC BEARING PAD DETAILS
HAWAII BELT ROAD
KUPAPAULUA BRIDGE WIDENING
HAMAKUA DISTICT
Federal Aid Project No. BR-019-2(38)

Scale: As Noted Date: June 23, 2003

SHEET No. S-24 OF 36 SHEETS

ORIGINAL PLAN | SURVEY PLOTTED BY | DRAWN BY | TRACED BY | DESIGNED BY | QUANTITIES BY | CHECKED BY | DATE
NOTEBOOK No.

Path: L:\WGA\66/0-01 Kupapaulua Bridge\Downsp Filename: S24 Plot date: Sep 25, 2006-07:58:19pm CAD User: skidoris Xref Filename: | Border | AUTODATE |

"AS-BUILT"

FED. ROAD DIST. NO.	STATE	FED. AID PROJ. NO.	FISCAL YEAR	SHEET NO.	TOTAL SHEETS
HAWAII	HAW.	BR-019-2(38)	2002	67A S-1	79

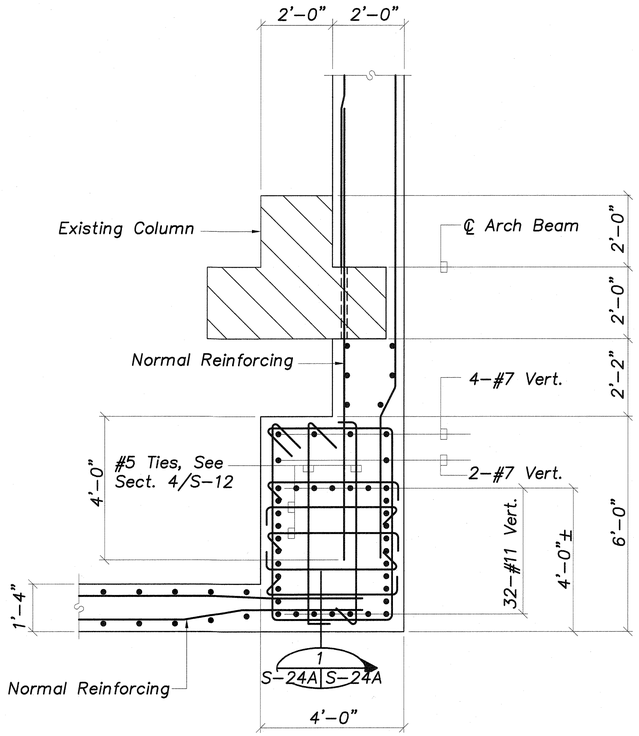

PARTIAL ABUTMENT PLAN/SECTION
SHOWING REVISED REINF. AT CORNER COL.

A
S-24A S-24A Scale: 1/2"=1'-0"

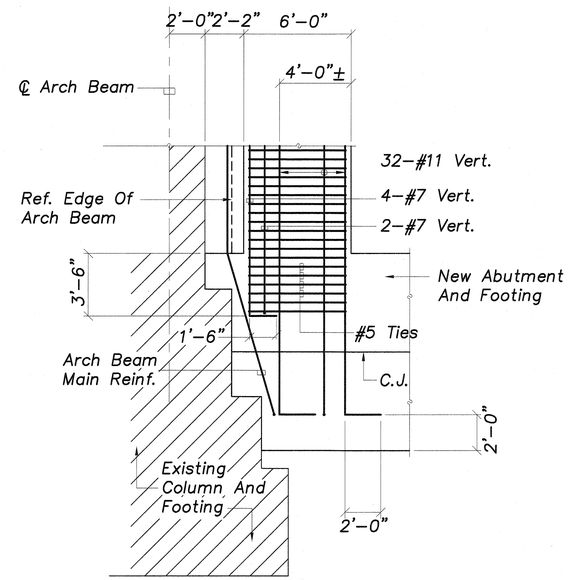

PARTIAL ABUTMENT SECTION AT
CORNER COLUMN REVISED REINFORCING

1
S-24A S-24A Scale: 1/4"=1'-0"

GRAPHIC SCALES

0 4' 8' 12'
SCALE: 1/4" = 1'-0"

0 2' 4' 6'
SCALE: 1/2" = 1'-0"

Note:
This Tracing Prepared During "As-Built" Posting.

ORIGINAL PLAN		DATE
	SURVEY PLOTTED BY	
	DRAWN BY	
NOTEBOOK	TRACED BY	
	DESIGNED BY	
	QUANTITIES BY	
No.	CHECKED BY	

DATE	REVISION

STATE OF HAWAII
DEPARTMENT OF TRANSPORTATION
HIGHWAYS DIVISION

PARTIAL ABUTMENT PLAN / SECTION
AT CORNER COLUMN
HAWAII BELT ROAD
KUPAPAULUA BRIDGE WIDENING
HAMAKUA DISTICT
Federal Aid Project No. BR-019-2(38)

Scale: As Noted Date: June 23, 2003

SHEET No. S-24A OF 36 SHEETS

"AS-BUILT"

FED. ROAD DIST. NO.	STATE	FED. AID PROJ. NO.	FISCAL YEAR	SHEET NO.	TOTAL SHEETS
HAWAII	HAW.	BR-019-2(38)	2002	68A	79

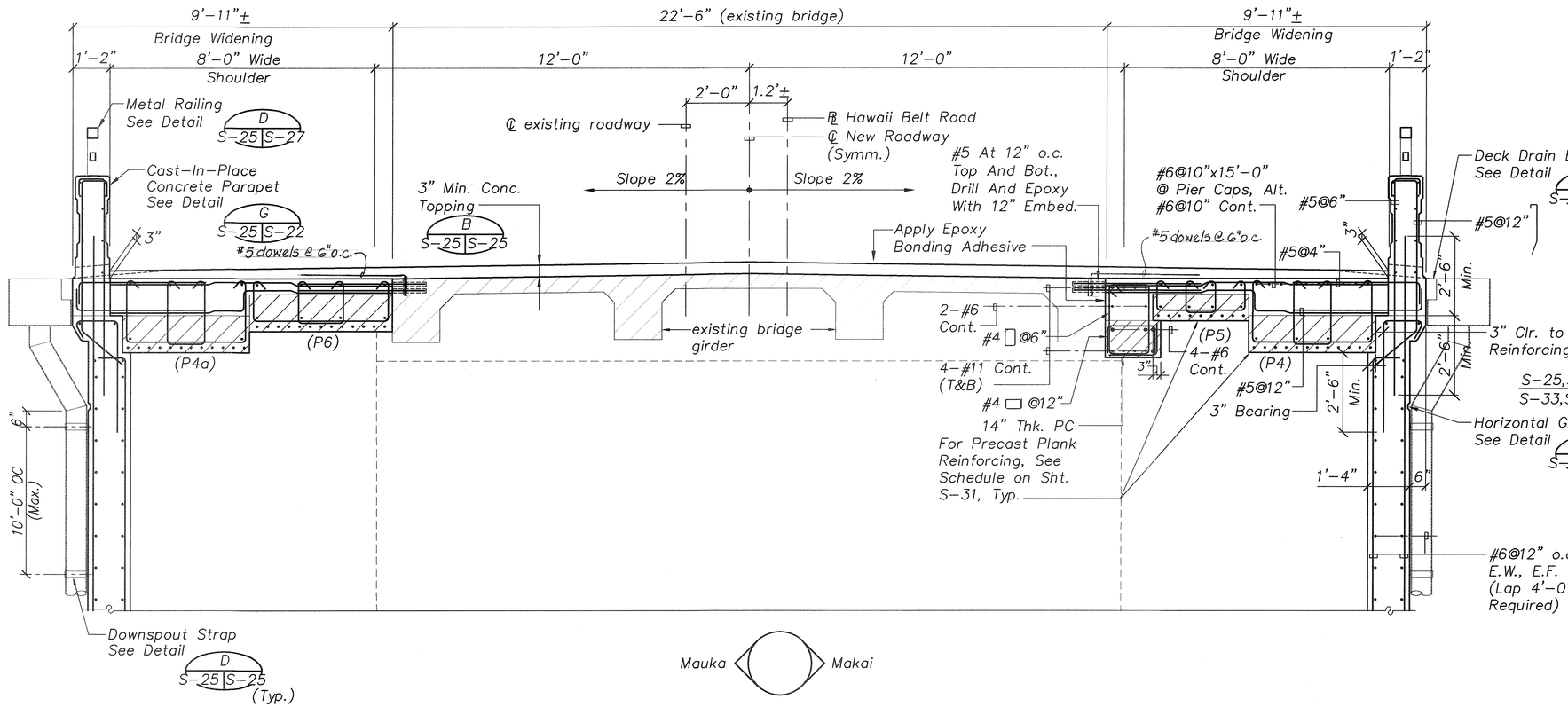

TYPICAL DECK SECTION AT WING WALLS

A S-20, S-26 S-25 Scale: 1/2"=1'-0"

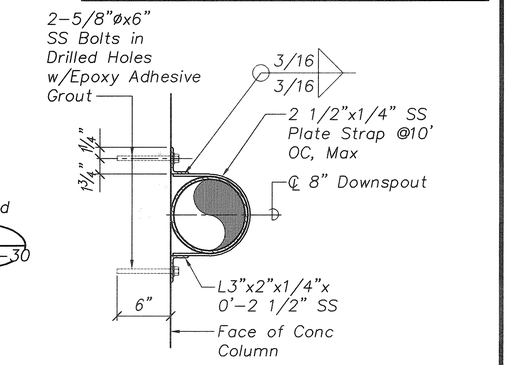

PLAN
STRAP AT DOWNSPOUT

D S-7 S-25 Scale: 1 1/2"=1'-0"

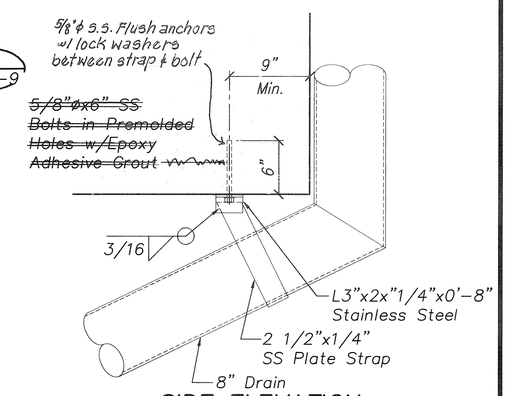

SIDE ELEVATION
STRAP AT DOWNSPOUT

E S-21 S-25 Scale: 1 1/2"=1'-0"

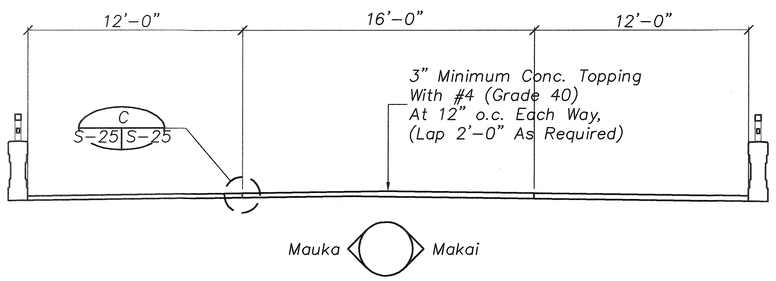

Note:
Refer To "Construction Sequence" For Pour Sequence Of Concrete Topping.

CONCRETE TOPPING DETAIL

B S-20, S-23, S-25 S-25 Scale: 1/4"=1'-0"

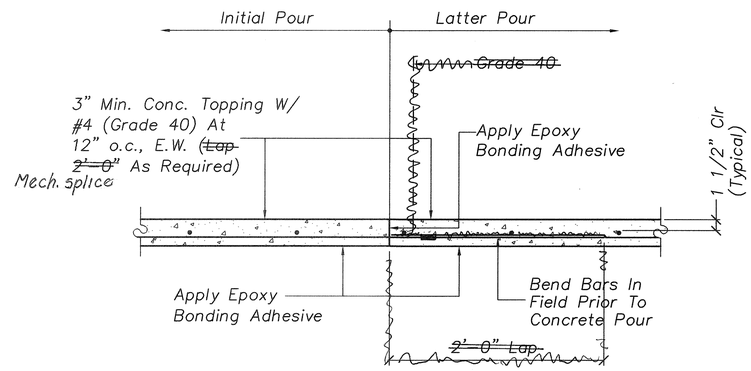

DETAIL

C S-25 S-25 Scale: 1 1/2"=1'-0"

GRAPHIC SCALES

0 4 8 12
SCALE: 1/4" = 1'-0"

0 2' 4' 6'
SCALE: 1/2" = 1'-0"

DATE	REVISION

STATE OF HAWAII
DEPARTMENT OF TRANSPORTATION
HIGHWAYS DIVISION

TYPICAL DECK SECTION AT WING WALLS, CONCRETE TOPPING DETAILS
HAWAII BELT ROAD
KUPAPAULUA BRIDGE WIDENING
HAMAKUA DISTICT
Federal Aid Project No. BR-019-2(38)

Scale: As Noted Date: June 23, 2003

MYRON G. OKUBO
LICENSED PROFESSIONAL ENGINEER
No. 4320-S
HAWAII, U.S.A.

THIS WORK WAS PREPARED BY ME OR UNDER MY SUPERVISION

Myron Okubo

SHEET No. S-25 OF 36 SHEETS

ORIGINAL PLAN | SURVEY PLOTTED BY | DRAWN BY | TRACED BY | DESIGNED BY | QUANTITIES BY | CHECKED BY | DATE
NOTEBOOK No.

Path: L:\WGA\6670-01 Kupapaulua Bridge\Downsp Filename: S25 Plot date: Sep 25, 2006-07:58:53pm CAD User: skidani, Xref Filename: | Border | AUTODATE |

"AS-BUILT"

FED. ROAD DIST. NO.	STATE	FED. AID PROJ. NO.	FISCAL YEAR	SHEET NO.	TOTAL SHEETS
HAWAII	HAW.	BR-019-2(38)	2002	69A	79

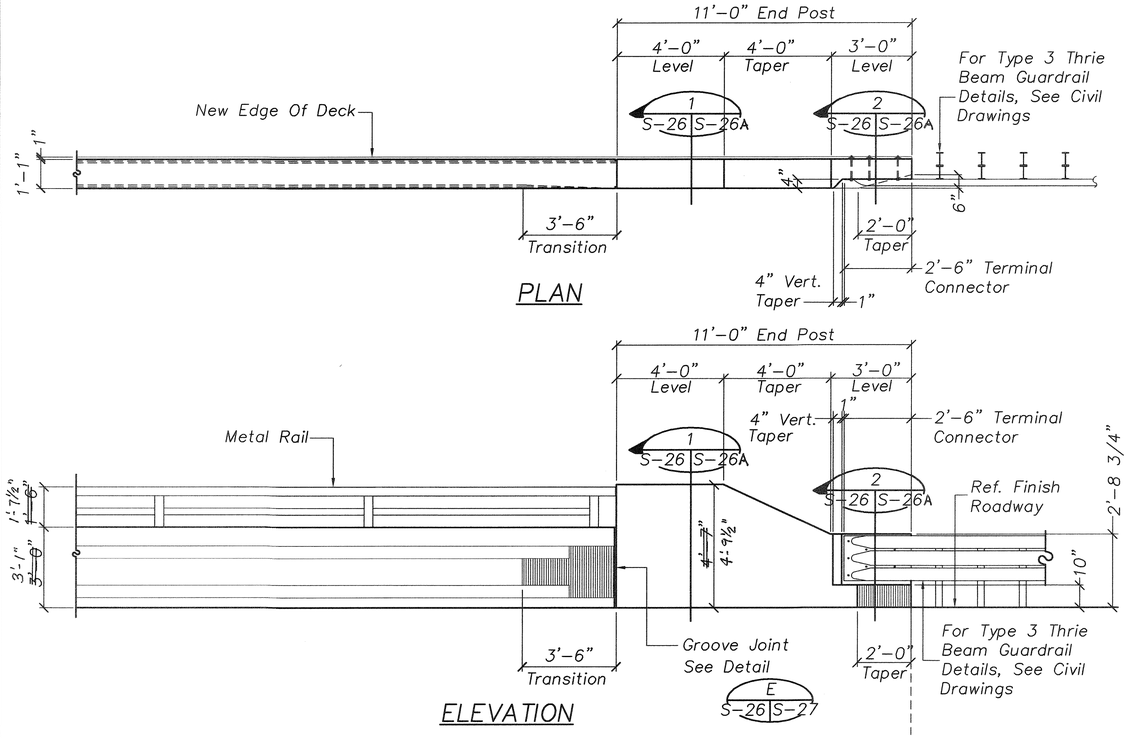

TYPICAL GUARDRAIL TO END POST CONNECTION DET.

A S-9 | S-26 Scale: 3/8"=1'-0"

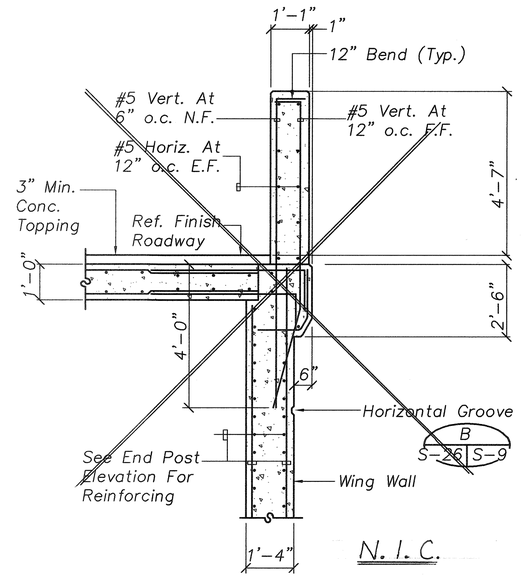

SECTION AT END POST

1 S-26 | S-26 Scale: 1/2"=1'-0"

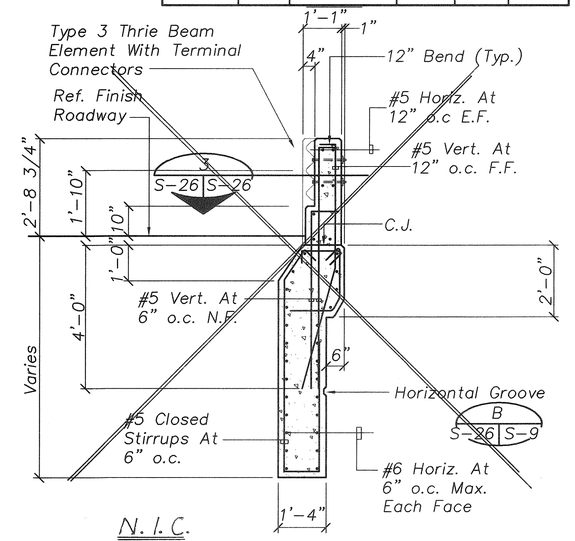

SECTION AT TERMINAL CONNECTOR

2 S-26 | S-26 Scale: 1/2"=1'-0"

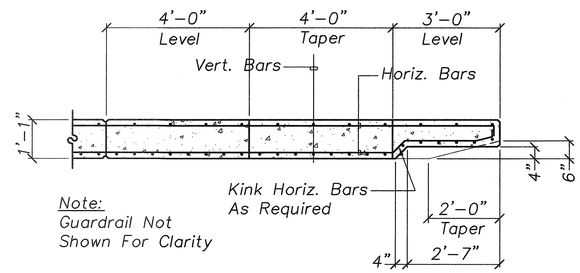

SECTION AT END POST

3 S-26 | S-26 Scale: 1/2"=1'-0"

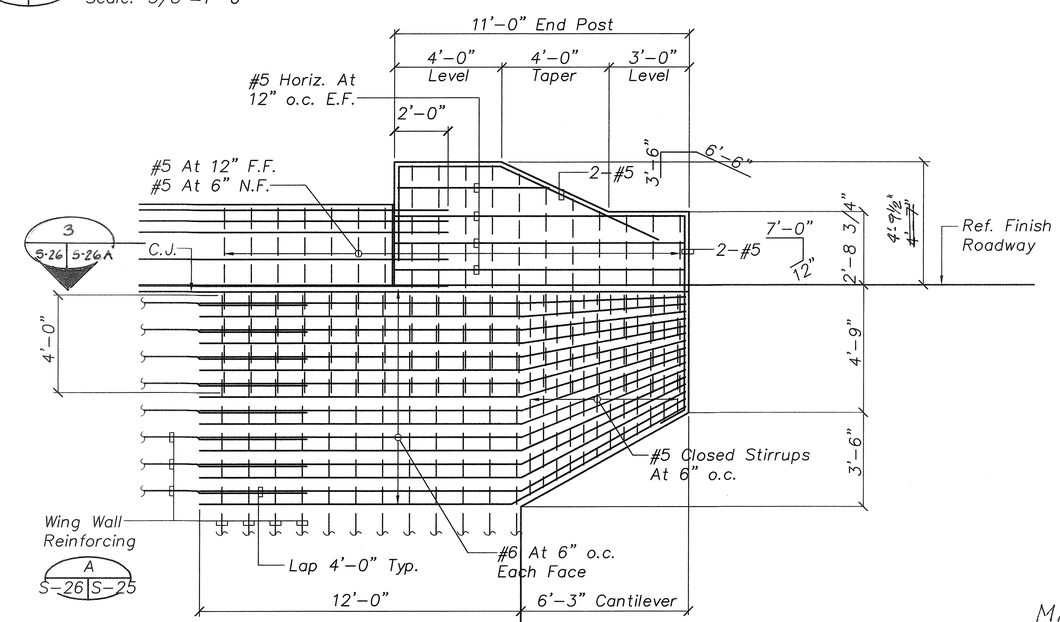

~~TYPICAL~~ END POST ELEVATION - ABUTMENT No. 1 ~~MAUKA~~ MAKAI

B S-9 | S-26 Scale: 3/8"=1'-0"

GRAPHIC SCALES

0 2' 4' 6'
SCALE: 1/2" = 1'-0"

0 2' 4' 6' 8'
SCALE: 3/8" = 1'-0"

DATE	REVISION

STATE OF HAWAII
DEPARTMENT OF TRANSPORTATION
HIGHWAYS DIVISION

TYPICAL GUARDRAIL TO END POST CONNECTION DETAIL
HAWAII BELT ROAD
KUPAPAULUA BRIDGE WIDENING
HAMAKUA DISTICT
Federal Aid Project No. BR-019-2(38)

Scale: As Noted Date: June 23, 2003

MYRON G. OKUBO LICENSED PROFESSIONAL ENGINEER No. 4320-S HAWAII, U.S.A.

THIS WORK WAS PREPARED BY ME OR UNDER MY SUPERVISION

Myron Okubo

ORIGINAL PLAN | NOTEBOOK | No. | SURVEY PLOTTED BY | DRAWN BY | TRACED BY | DESIGNED BY | QUANTITIES BY | CHECKED BY | DATE

Path: L:\WOA\6670-01 Kupapaulua Bridge\Dwnsp Filename: S26 Plot date: Sep 25, 2006-07:59:18pm CAD User: skidani; Xref Filename: | Border | AUTODATE |

"AS-BUILT"

FED. ROAD DIST. NO.	STATE	FED. AID PROJ. NO.	FISCAL YEAR	SHEET NO.	TOTAL SHEETS
HAWAII	HAW.	BR-019-2(38)	2002	69A S-1	79

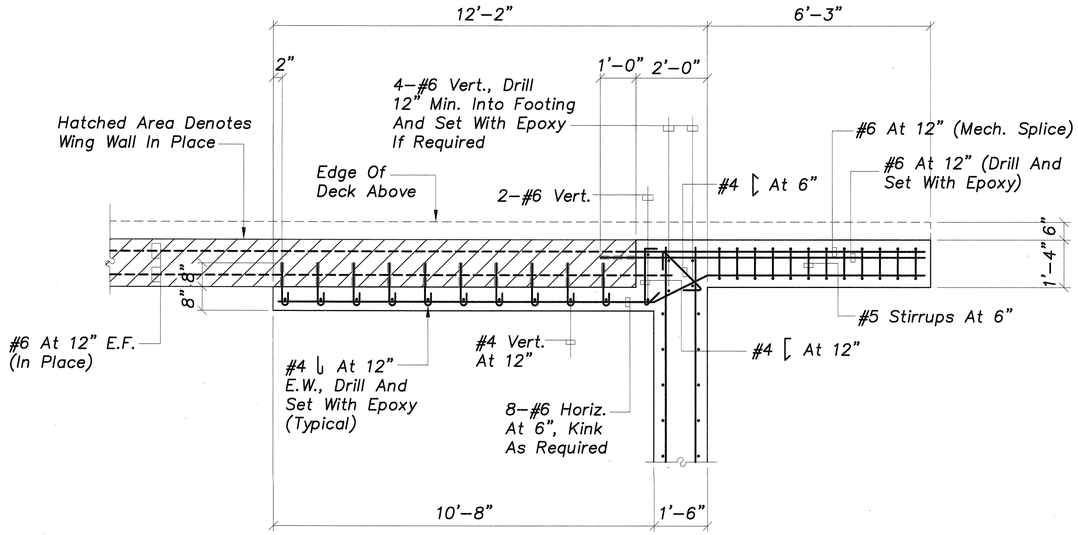

3 S-26A S-26A SECTION Scale: 1/2"=1'-0"

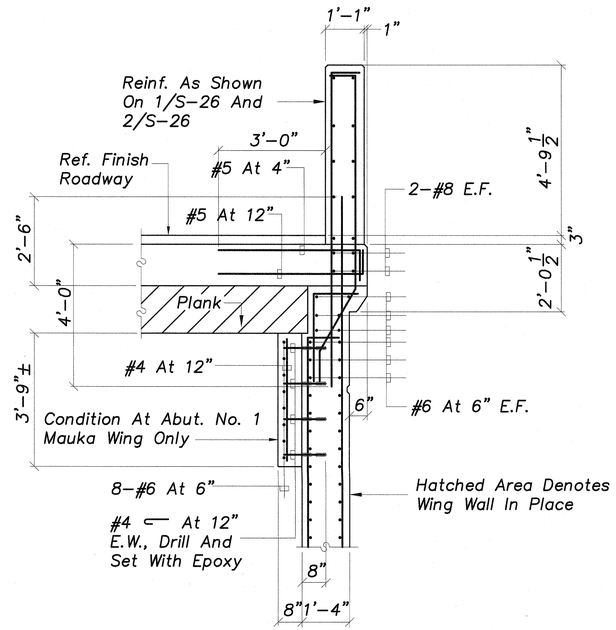

1 S-26 S-26A SECTION Scale: 1/2"=1'-0"
S-26A
S-26B

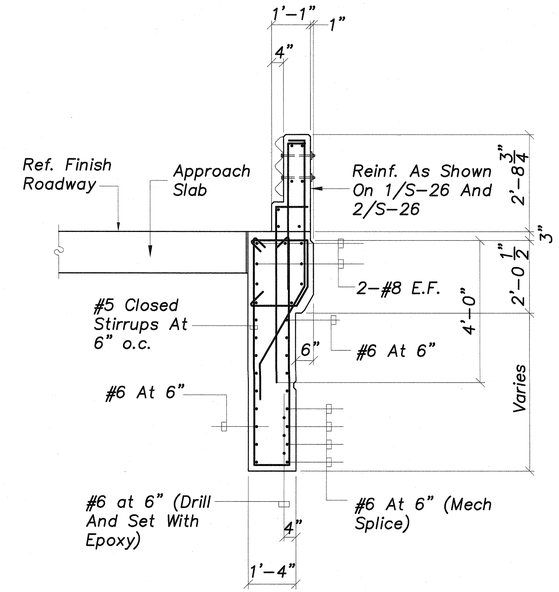

2 S-26 S-26A SECTION Scale: 1/2"=1'-0"
S-26A
S-26B

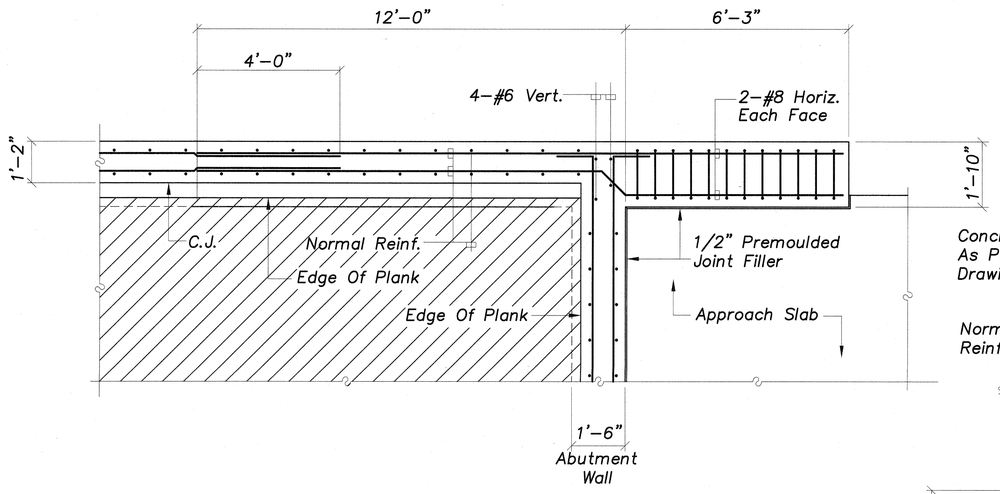

4 S-26A S-26A SECTION Scale: 1/2"=1'-0"

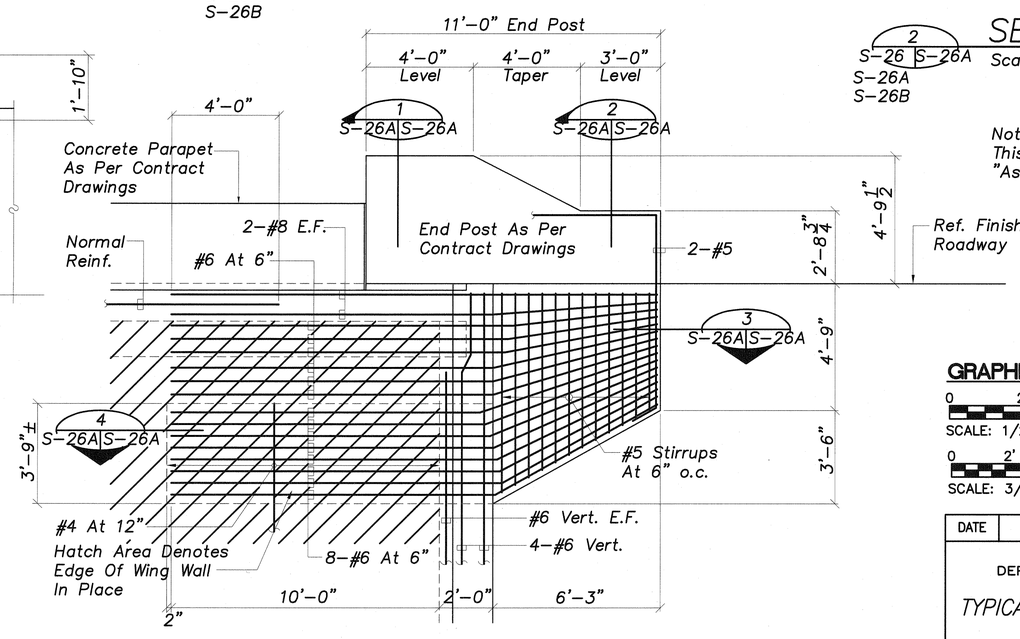

Note:
This Tracing Prepared During "As-Built" Posting.

A S-26A S-26A REVISED ABUTMENT NO. 1 MAUKA WING WALL ELEVATION Scale: 3/8"=1'-0"

GRAPHIC SCALES

0 2' 4' 6'
SCALE: 1/2" = 1'-0"

0 2' 4' 6' 8'
SCALE: 3/8" = 1'-0"

DATE	REVISION

STATE OF HAWAII
DEPARTMENT OF TRANSPORTATION
HIGHWAYS DIVISION

TYPICAL GUARDRAIL TO END POST CONNECTION DETAIL
HAWAII BELT ROAD
KUPAPAULUA BRIDGE WIDENING
HAMAKUA DISTICT
Federal Aid Project No. BR-019-2(38)

Scale: As Noted Date: June 23, 2003

SHEET No. S-26A OF 36 SHEETS

ORIGINAL PLAN
PLANS ESTIMATE BY
PLANS PREPARED BY
DESIGNED BY
QUANTITIES BY
CHECKED BY
DATE
No.

"AS-BUILT"

FED. ROAD DIST. NO.	STATE	FED. AID PROJ. NO.	FISCAL YEAR	SHEET NO.	TOTAL SHEETS
HAWAII	HAW.	BR-019-2(38)	2002	69A S-2	79

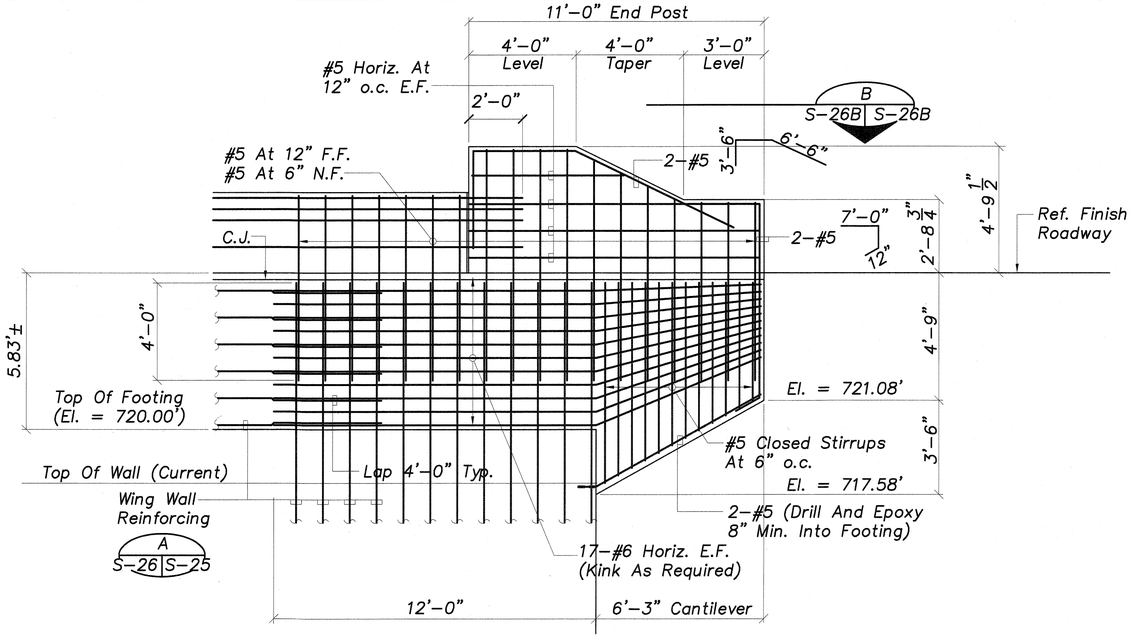

A
S-26B S-26B

TYPICAL END POST ELEVATION (Abutment No. 2 Mauka And Makai)

Scale: 3/8"=1'-0"

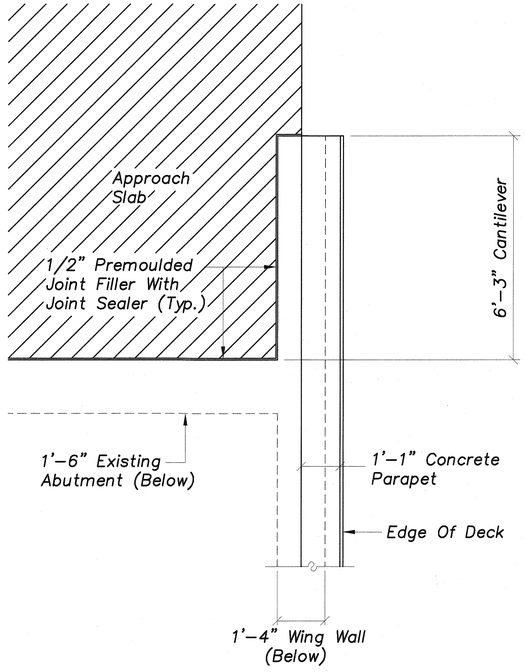

B
S-26B S-26B

PLAN VIEW

Scale: 1/2"=1'-0"

Note:
This Tracing Prepared During "As-Built" Posting

GRAPHIC SCALES

0 2' 4' 6'
SCALE: 1/2" = 1'-0"

0 2' 4' 6' 8'
SCALE: 3/8" = 1'-0"

DATE	REVISION

STATE OF HAWAII
DEPARTMENT OF TRANSPORTATION
HIGHWAYS DIVISION

TYPICAL GUARDRAIL TO END POST CONNECTION DETAIL
HAWAII BELT ROAD
KUPAPAULUA BRIDGE WIDENING
HAMAKUA DISTICT
Federal Aid Project No. BR-019-2(38)

Scale: As Noted Date: June 23, 2003

SHEET No. S-26B OF 36 SHEETS

ORIGINAL PLAN
DESIGNED BY
DRAWN BY
TRACED BY
SUBMITTED BY
SURVEY PLOTTED BY
DATE
CHECKED BY
QUANTITIES BY
No.

"AS-BUILT"

69A S-2

FED. ROAD DIST. NO.	STATE	FED. AID PROJ. NO.	FISCAL YEAR	SHEET NO.	TOTAL SHEETS
HAWAII	HAW.	BR-019-2(38)	2002	70A	79

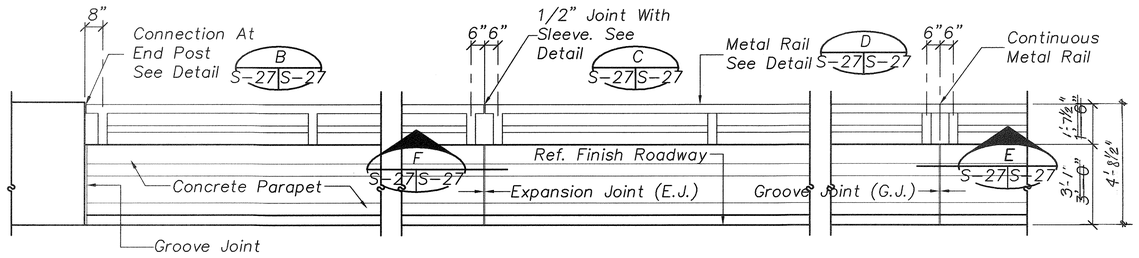

Note: Refer To Sheet S-7 For Expansion Joint (E.J.) And Groove Joint (G.J.) Location.

A S-7 S-27 TYPICAL PARAPET AND METAL RAIL ELEVATION

Scale: 3/8"-1'-0"

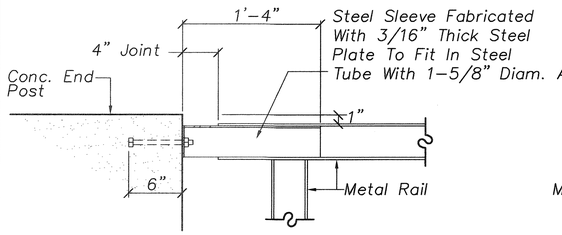

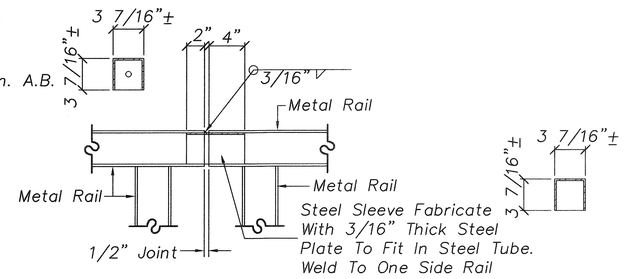

B S-27 S-27 DETAIL AT END POST

Scale: 1 1/2"=1'-0"

C S-27 S-27 DETAIL AT EXPANSION JOINT (E.J.)

Scale: 1 1/2"=1'-0"

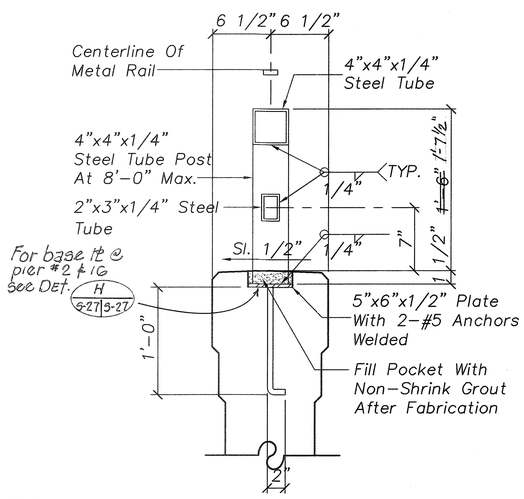

Note:

1. Grind All Exposed Welded Joints On Metal Rail Smooth.
2. Metal Rail Assembly Shall Be Hot Dipped Galvanized After Fabrication.
3. All Exposed Metal Rail Shall Be Painted After Installation. Prior To Painting, Rough Areas Of Galvanized Surface Shall Be Ground Smooth.

S-20, S-22, S-25, D S-27 S-27 **METAL RAIL DETAIL**

Scale: 1 1/2"=1'-0"

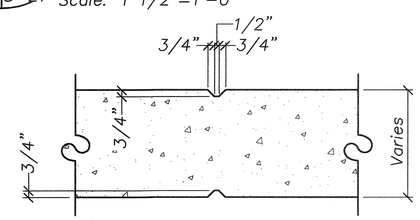

E S-27 S-27 SECTION AT GROOVE JOINT (G.J.)

Scale: 1 1/2"=1'-0"

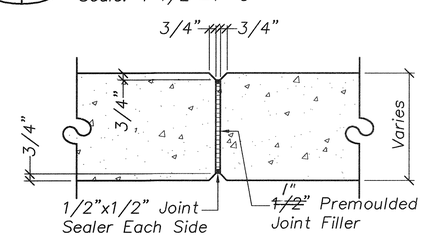

Note: Provide 1" Premoulded Joint Filler And Joint Sealer At Deck Expansion Joint.

F S-27 S-27 SECTION AT EXPANSION JOINT (E.J.)

Scale: 1 1/2"=1'-0"

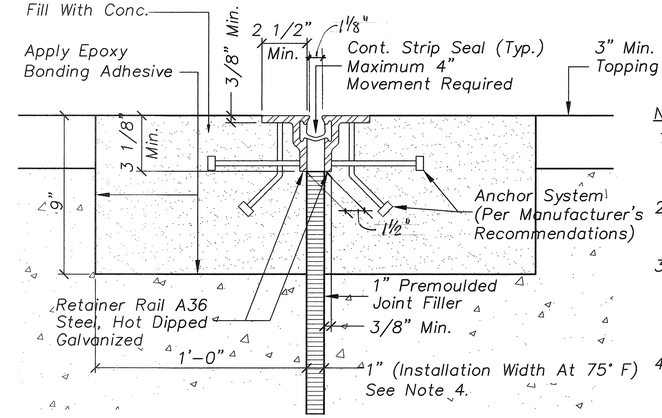

DECK EXPANSION JOINT SECTION

Notes:

1. At existing deck slab, remove expansion joint cover plates and concrete as necessary. Existing reinforcing bars to remain.
2. Just prior to concrete pour of the hatched areas, coat the indicated surfaces with an epoxy bonding adhesive.
3. Dotted areas shall be poured after 14 days of final deck slab pour. Anchor devices shall be located and held in their final position, as per Manufacturer's requirements, during the concreting of the dotted areas.
4. Dimensions denotes joint opening width at time of installation of joint seal.

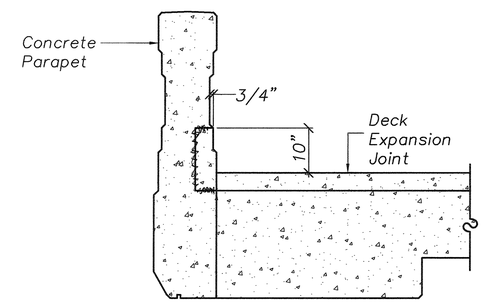

TYPICAL SECTION AT STANDARD PARAPET

Scale: 3/4"=1'-0"

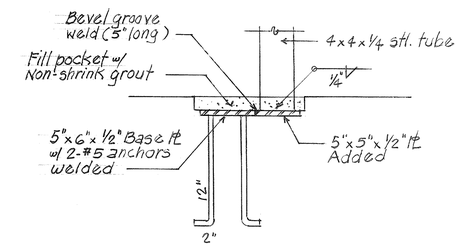

H S-27 S-27 BASE ℔ @ PIER #2 & 16

Scale 1½"=1'-0"

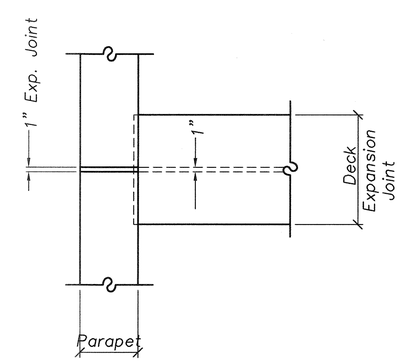

TYPICAL PLAN AT CONCRETE PARAPET

Scale: 3/4"=1'-0"

G S-23 S-27 DECK EXPANSION JOINT DETAIL

Scale As Noted

GRAPHIC SCALES

0 2' 4' 6' 8'
SCALE: 3/8" = 1'-0"

0 1' 2' 3' 4'
SCALE: 3/4" = 1'-0"

0 1' 2'
SCALE: 1-1/2" = 1'-0"

MYRON G. OKUBO LICENSED PROFESSIONAL ENGINEER No. 4320-S HAWAII, U.S.A.

THIS WORK WAS PREPARED BY ME OR UNDER MY SUPERVISION

Myron Okubo

DATE	REVISION

STATE OF HAWAII
DEPARTMENT OF TRANSPORTATION
HIGHWAYS DIVISION

METAL RAIL DETAILS, EXPANSION JOINT DETAILS
HAWAII BELT ROAD
KUPAPAULUA BRIDGE WIDENING
HAMAKUA DISTICT
Federal Aid Project No. BR-019-2(38)

Scale: As Noted Date: June 23, 2003

SHEET No. S-27 OF 36 SHEETS

ORIGINAL PLAN | SURVEY PLOTTED BY | DRAWN BY | TRACED BY | DESIGNED BY | QUANTITIES BY | CHECKED BY | DATE
NOTEBOOK No.

"AS-BUILT"

70A

FED. ROAD DIST. NO.	STATE	FED. AID PROJ. NO.	FISCAL YEAR	SHEET NO.	TOTAL SHEETS
HAWAII	HAW.	BR-019-2(38)	2002	71A	79

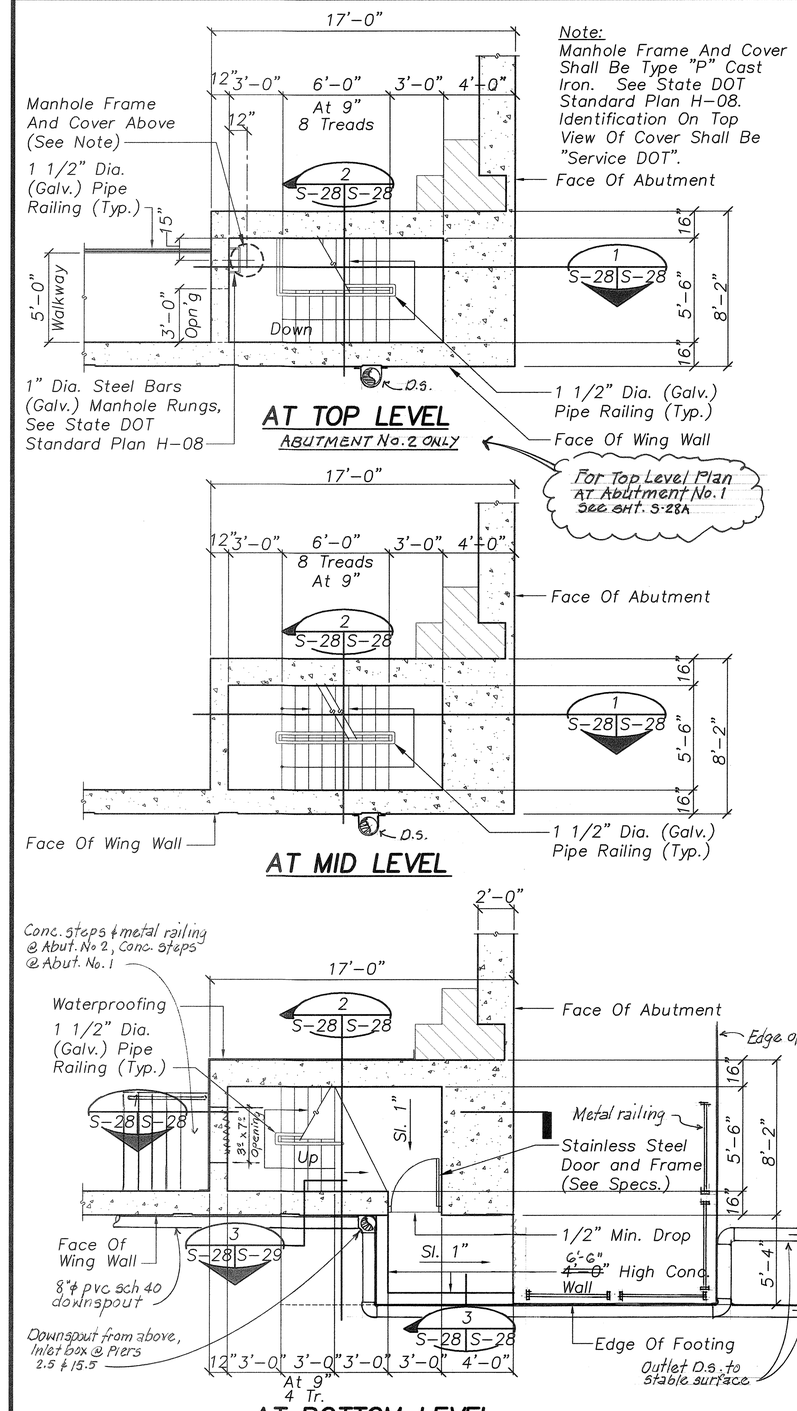

Note:
Manhole Frame And Cover Shall Be Type "P" Cast Iron. See State DOT Standard Plan H-08. Identification On Top View Of Cover Shall Be "Service DOT".

AT TOP LEVEL
ABUTMENT No. 2 ONLY

AT MID LEVEL

AT BOTTOM LEVEL

TYPICAL SERVICE STAIRS PLAN
S-7, S-8, S-10, S-11, S-14, A S-24 S-28 Scale: 1/4"=1'-0'

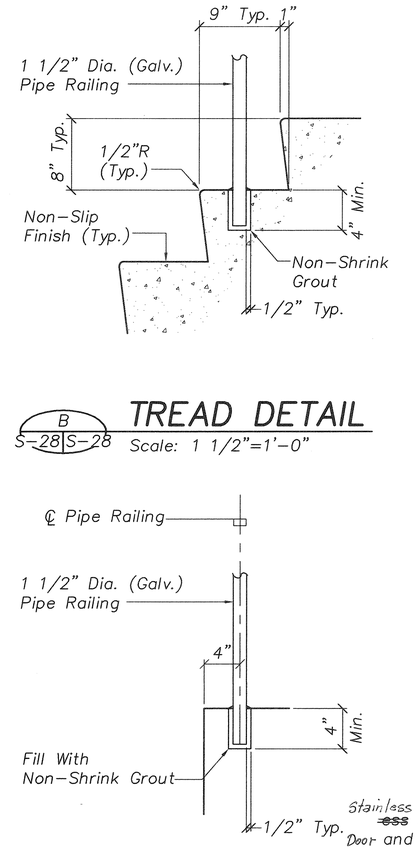

TREAD DETAIL
B S-28 S-28 Scale: 1 1/2"=1'-0"

DETAIL SECTION AT RAILING
C S-28 S-28 Scale: 1 1/2"=1'-0"

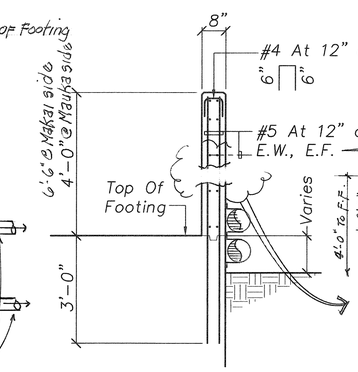

WALL SECTION
3 S-28 S-28 Scale: 1/2"=1'-0"

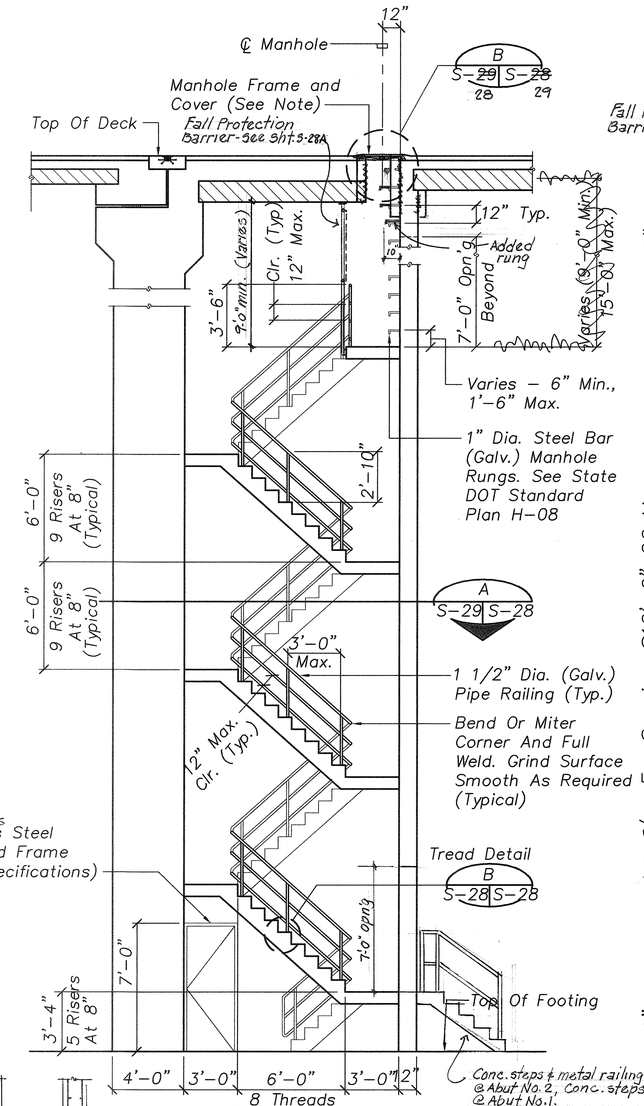

STAIR SECTION
1 S-28 S-28 Scale: 1/4"=1'-0"

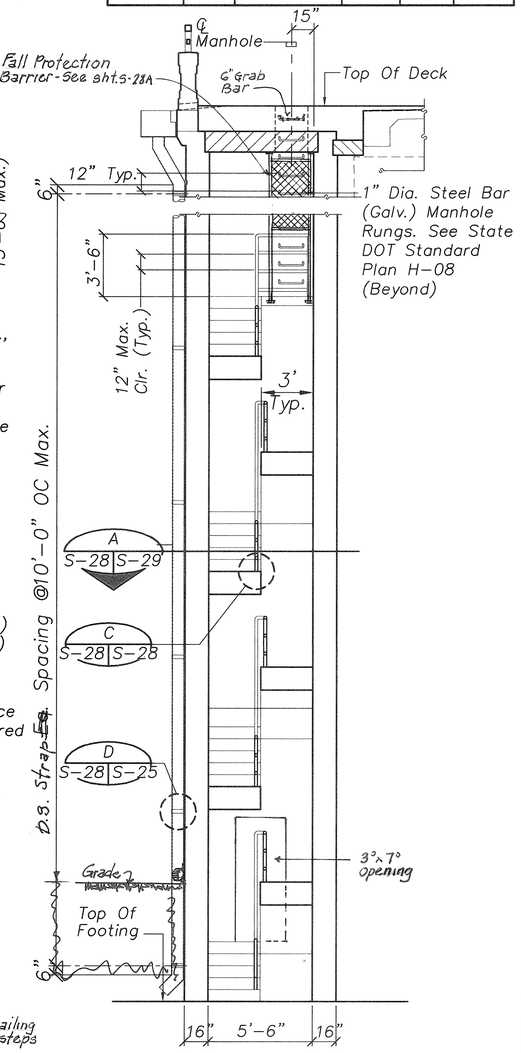

STAIR SECTION
2 S-28 S-28 Scale: 1/4"=1'-0"

SURVEY PLOTTED BY	DATE
DRAWN BY	
TRACED BY	
DESIGNED BY	
QUANTITIES BY	
CHECKED BY	

ORIGINAL PLAN	NOTEBOOK	No.

GRAPHIC SCALES
0 4' 8' 12' SCALE: 1/4" = 1'-0"
0 2' 4' 6' SCALE: 1/2" = 1'-0"
0 1 2 SCALE: 1-1/2" = 1'-0"

MYRON G. OKUBO LICENSED PROFESSIONAL ENGINEER No. 4320-S HAWAII, U.S.A.

THIS WORK WAS PREPARED BY ME OR UNDER MY SUPERVISION
Myron Okubo

DATE	REVISION

STATE OF HAWAII
DEPARTMENT OF TRANSPORTATION
HIGHWAYS DIVISION

SERVICE STAIR DETAILS

HAWAII BELT ROAD
KUPAPAULUA BRIDGE WIDENING
HAMAKUA DISTICT
Federal Aid Project No. BR-019-2(38)

Scale: As Noted Date: June 23, 2003

SHEET No. S-28 OF 36 SHEETS

"AS-BUILT"

71A

Path: L:\W0A\6670-01 Kupapaulua Bridge\Downsp Filename: S28 Plot date: Sep 25, 2006-08:04:02pm CAD User: skidani. Xref Filename: | Border | AUTODATE |

FED. ROAD DIST. NO.	STATE	FED. AID PROJ. NO.	FISCAL YEAR	SHEET NO.	TOTAL SHEETS
HAWAII	HAW.	BR-019-2(38)	2002	71A S-1	79

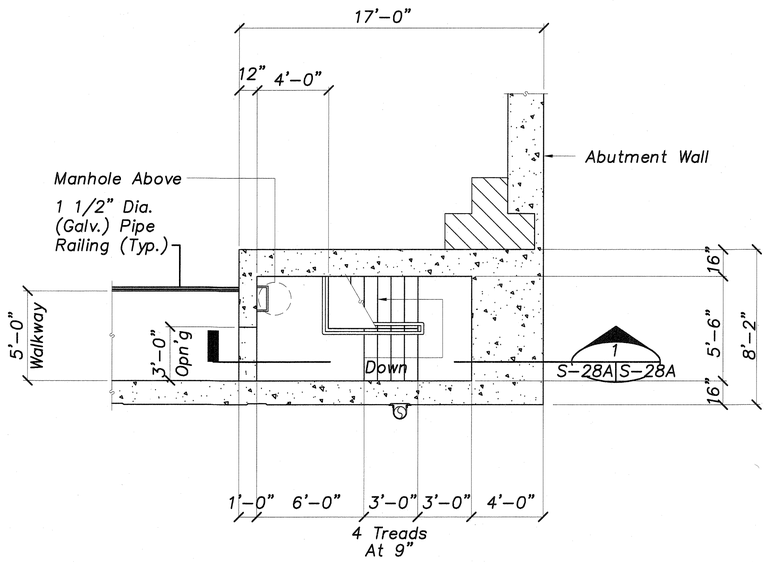

REVISED SERVICE STAIRS TOP LEVEL LANDING

A S-28 S-28A Scale: 1/2"=1'-0" (At Abutment No. 1)

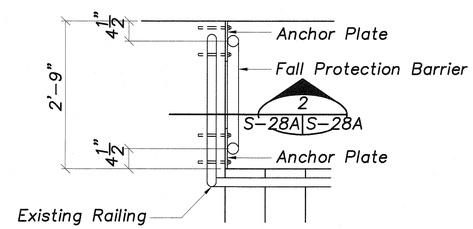

PARTIAL PLAN

Scale: 3/4"=1'-0"

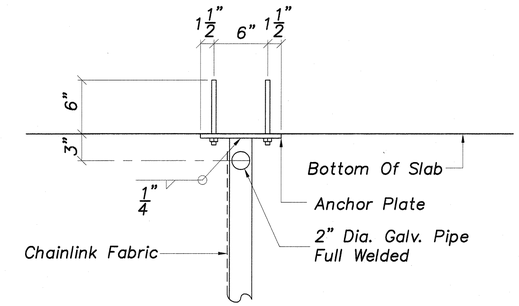

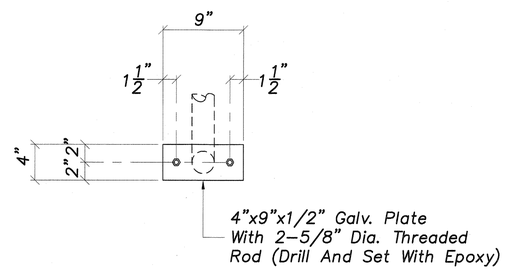

ANCHOR PLATE DETAIL

Scale: 1-1/2"=1'-0"

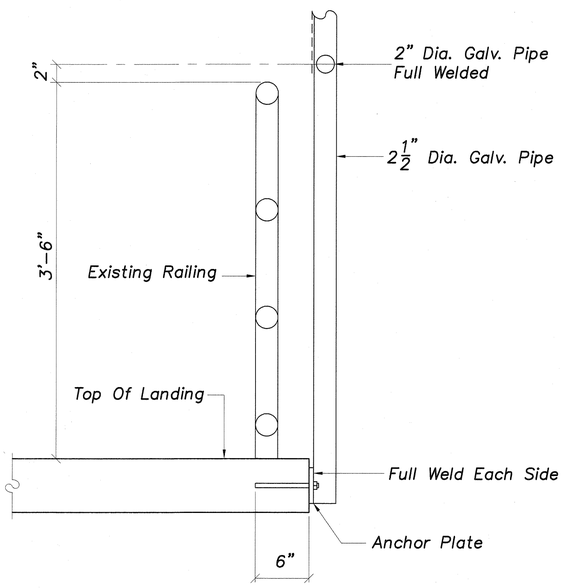

SECTION

2 S-28A S-28A Scale: 1-1/2"=1'-0"

Note:
1. Chain Link Fabric Shall Be Galvanized No. 9 Gage 2" Mesh.
2. Fabric Shall Be Fastened To End Post By Stretcher Bar And Bands At 12" o.c.
3. Fabric Shall Be Fastened To Top And Bottom Rail With No. 9 Gage Galvanized Wire At 6" o.c.

FALL PROTECTION BARRIER AT SERVICE STAIRS

B S-28 S-28A Scale: As Noted

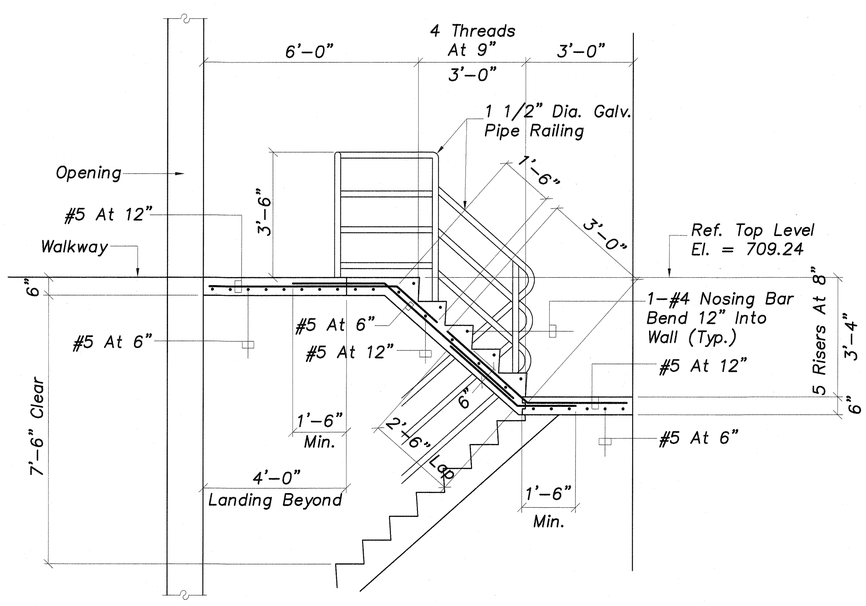

SECTION

1 S-28A S-28A Scale: 1/2"=1'-0"

Note:
This Tracing Prepared During "As-Built" Posting.

GRAPHIC SCALES

0 1" 2' 3'
SCALE: 3/4" = 1'-0"
0 2' 4' 6'
SCALE: 1/2" = 1'-0"
0 1 2
SCALE: 1-1/2" = 1'-0"

DATE	REVISION

STATE OF HAWAII
DEPARTMENT OF TRANSPORTATION
HIGHWAYS DIVISION

SERVICE STAIR DETAILS AND FALL PROTECTION BARRIER
HAWAII BELT ROAD
KUPAPAULUA BRIDGE WIDENING
HAMAKUA DISTICT
Federal Aid Project No. BR-019-2(38)

Scale: As Noted Date: June 23, 2003

SHEET No. S-28A OF 36 SHEETS

ORIGINAL PLAN
SURVEY PLOTTED BY ____ DATE ____
DRAWN BY ____
TRACED BY ____
DESIGNED BY ____
QUANTITIES BY ____
CHECKED BY ____
NOTEBOOK No. ____

"AS-BUILT"

FED. ROAD DIST. NO.	STATE	FED. AID PROJ. NO.	FISCAL YEAR	SHEET NO.	TOTAL SHEETS
HAWAII	HAW.	BR-019-2(38)	2002	72A	79

Note:
See A/S-24 For Remainder Of Reinforcing

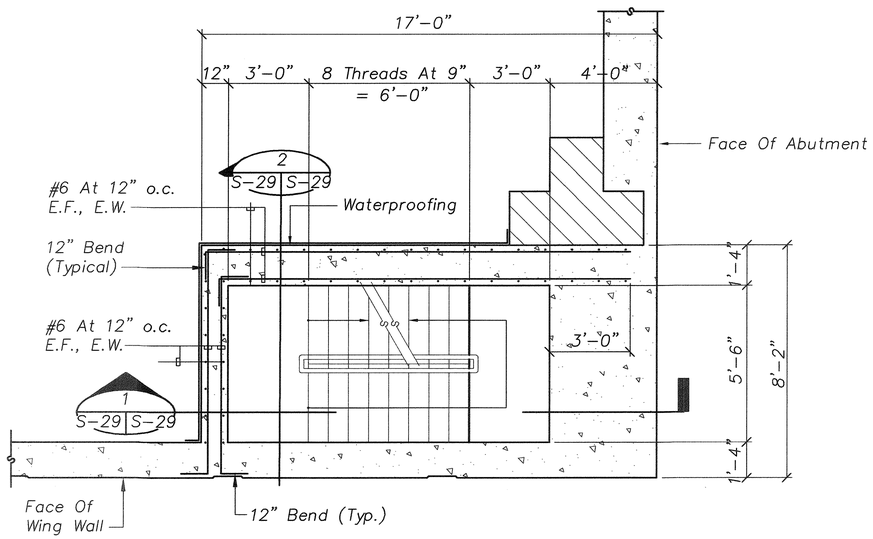

A
S-28 S-29
WALL REINFORCING PLAN AT SERVICE STAIRS
Scale: 3/8"=1'-0'

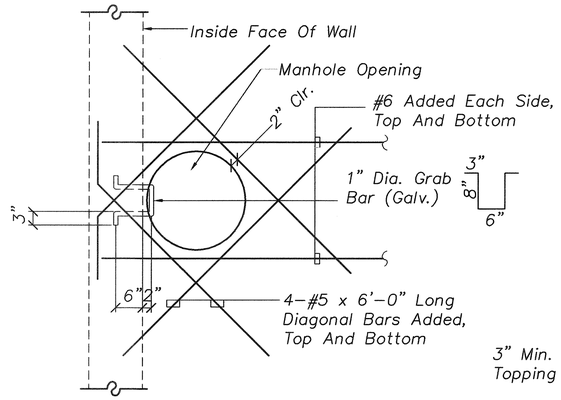

PLAN VIEW

Note:
Manhole Frame And Cover Shall Be Type "P" Cast Iron. See State DOT Standard Plan H-08. Identification On Top View Of Cover Shall Be "Service DOT."

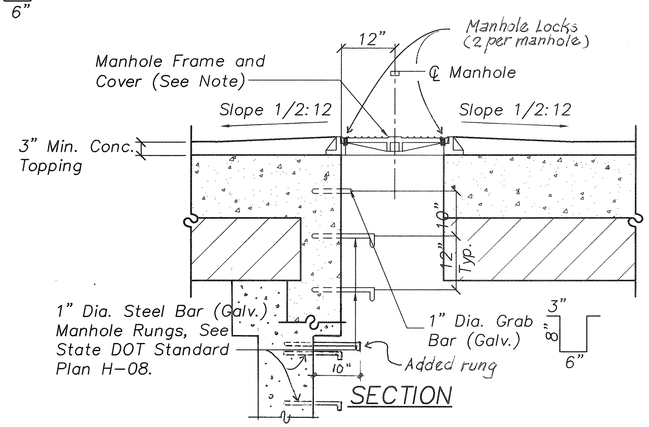

B
S-28, S-36 S-29
MANHOLE OPENING DETAIL
Scale: 3/4"=1'-0"

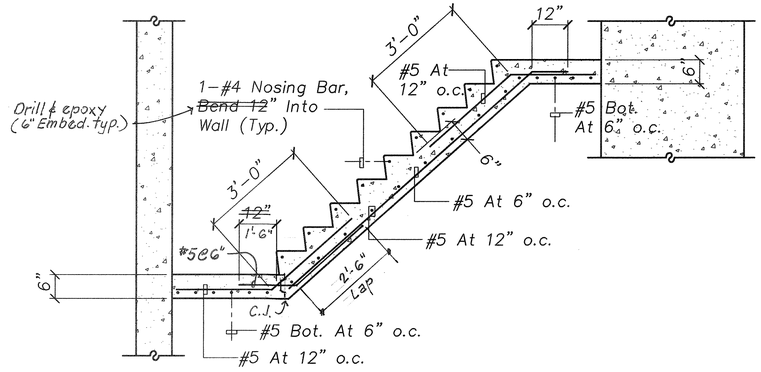

1
S-29 S-29
SECTION THRU STAIR
Scale: 1/2"=1'-0"

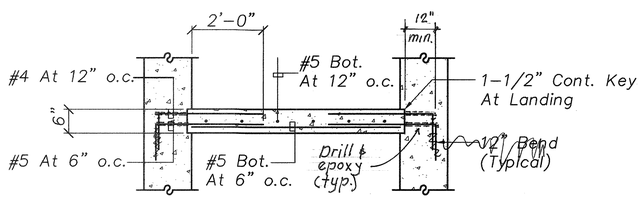

2
S-29 S-29
SECTION THRU LANDING
Scale: 1/2"=1'-0"

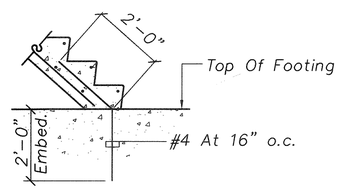

3
S-28 S-29
SECTION
Scale: 1/2"=1'-0"

GRAPHIC SCALES

0 2 4 6 8
SCALE: 3/8" = 1'-0"

0 2 4 6
SCALE: 1/2" = 1'-0"

0 1 2 3 4
SCALE: 3/4" = 1'-0"

DATE	REVISION

STATE OF HAWAII
DEPARTMENT OF TRANSPORTATION
HIGHWAYS DIVISION

SERVICE STAIR DETAILS

HAWAII BELT ROAD
KUPAPAULUA BRIDGE WIDENING
HAMAKUA DISTICT
Federal Aid Project No. BR-019-2(38)

Scale: As Noted Date: June 23, 2003

MYRON G. OKUBO
LICENSED PROFESSIONAL ENGINEER
No. 4320-S
HAWAII, U.S.A.

THIS WORK WAS PREPARED BY ME OR UNDER MY SUPERVISION

Myron Okubo

SHEET No. S-29 OF 36 SHEETS

ORIGINAL PLAN | SURVEY PLOTTED BY | DRAWN BY | TRACED BY | DESIGNED BY | QUANTITIES BY | CHECKED BY | DATE
NOTEBOOK No.

Path: L:\WOA\6670-01 Kupapaulua Bridge\Struct\NEW-1 Filename: S29 Plot date: Sep 25, 2006-08:05:50pm CAD User: skidani. Xref Filename: | Border | AUTODATE |

"AS-BUILT"

FED. ROAD DIST. NO.	STATE	FED. AID PROJ. NO.	FISCAL YEAR	SHEET NO.	TOTAL SHEETS
HAWAII	HAW.	BR-019-2(38)	2002	73A	79

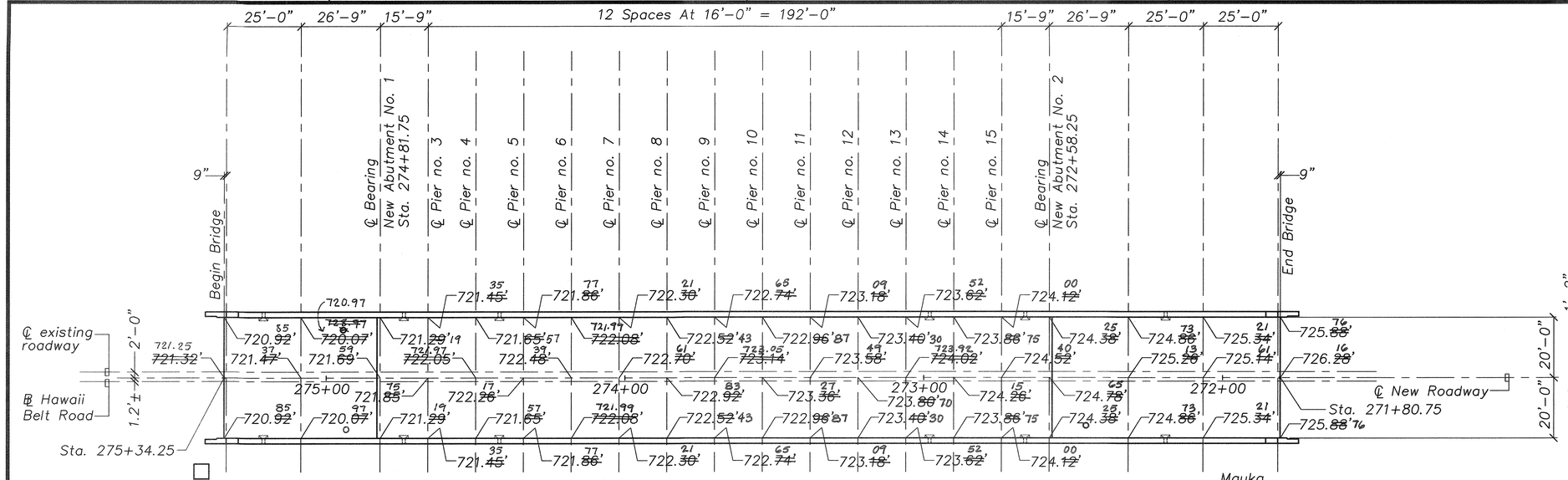

DECK ELEVATION LAYOUT PLAN

Scale: 1"=20'-0"

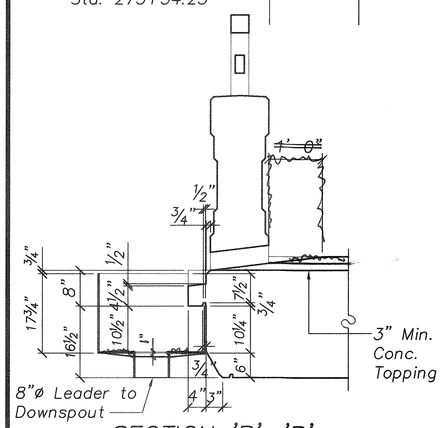

SECTION 'B'-'B'

Notes:

1. Kink concrete parapet horizontal reinforcing at deck drain, as required.
2. Provide 2 sets of vertical bars (4" on center) in concrete parapet on each sice of deck drain.

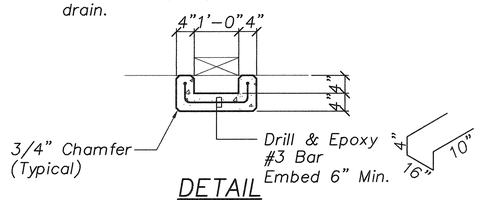

DETAIL

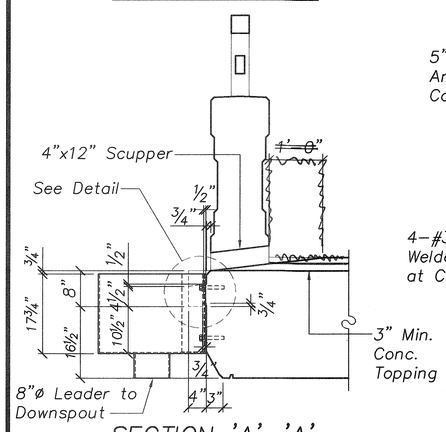

SECTION 'A'-'A'

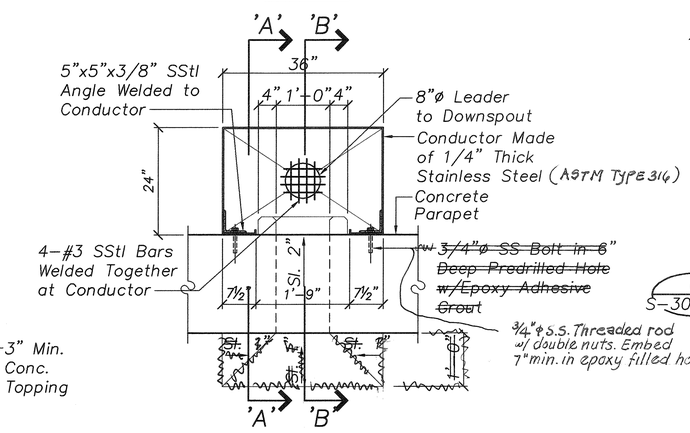

PLAN

TYPICAL DECK DRAIN DETAIL

S-7, S-8, S-9, S-20, S-22, S-23, S-25 (A) S-30 (B) Scale: 3/4"=1'-0"

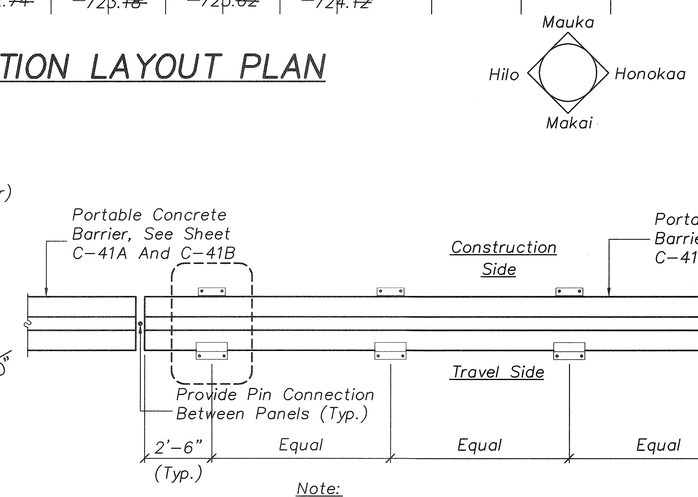

Note:

After Construction Stage As Indicated In The Traffic Control Plan Is Completed, Portable Concrete Barriers Shall Be Removed Drill And Epoxy Threaded Rods Shall Be Cut Flush With Deck Surface, Burnt Back 1/2", And Coated With Epoxy.

PLAN

3/8"=1'-0"

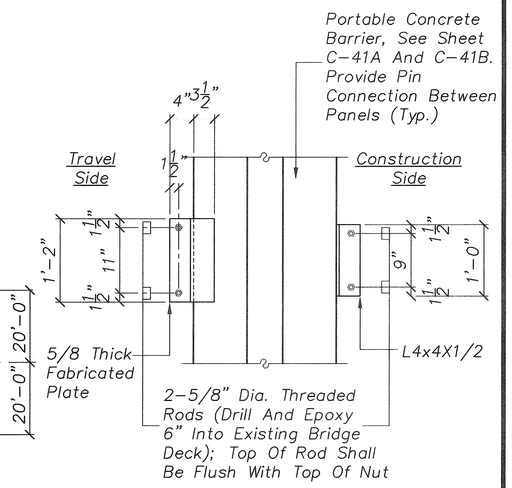

PLAN/DETAIL

3/4"=1'-0"

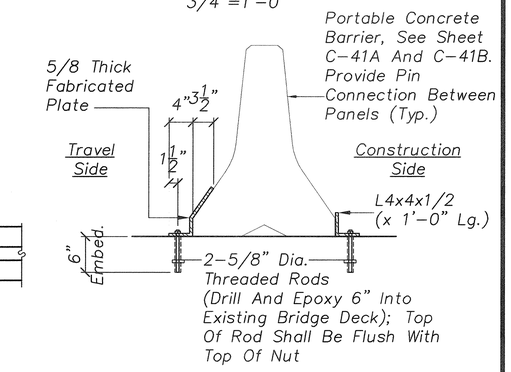

SECTION

3/4"=1'-0"

TYPICAL PORTABLE CONCRETE BARRIER ANCHORAGE DETAIL

(B) S-30 | S-30 Scale As Noted

GRAPHIC SCALES

0 20' 40' 60'
SCALE: 1" = 20'-0"

0 1' 2' 3' 4'
SCALE: 3/4" = 1'-0"

MYRON G. OKUBO LICENSED PROFESSIONAL ENGINEER No. 4320-S HAWAII, U.S.A.

THIS WORK WAS PREPARED BY ME OR UNDER MY SUPERVISION

Myron Okubo

DATE	REVISION
4/15/02	REVISED "TYPICAL PORTABLE CONCRETE BARRIER ANCHORAGE DETAIL"

STATE OF HAWAII
DEPARTMENT OF TRANSPORTATION
HIGHWAYS DIVISION

DECK ELEVATION LAYOUT PLAN, TYPICAL DECK DRAIN DETAIL
HAWAII BELT ROAD
KUPAPAULUA BRIDGE WIDENING
HAMAKUA DISTICT
Federal Aid Project No. BR-019-2(38)

Scale: As Noted Date: June 23, 2003

SHEET No. S-30 OF 36 SHEETS

ORIGINAL PLAN	SURVEY PLOTTED BY	DATE
NOTEBOOK	DRAWN BY	
	TRACED BY	
	DESIGNED BY	
	QUANTITIES BY	
No.	CHECKED BY	

"AS-BUILT"

FED. ROAD DIST. NO.	STATE	FED. AID PROJ. NO.	FISCAL YEAR	SHEET NO.	TOTAL SHEETS
HAWAII	HAW.	BR-019-2(38)	2002	74A	79

PRESTRESSED PLANK NOTES:

1. Concrete shall have a Minimum Ultimate 28 Day Compressive Strength of 6000 PSI. Minimum Compressive Strength before Release of Strands is 4000 PSI.
2. Prestressing Stands are One-half Inch Diameter, 7 Wire Low-Relaxation Steel Strands (Area = 0.1531 in^2) with an Ultimate Strength of 270 KSI, and shall Conform to ASTM A416.
3. Total Long Term Losses due to Creep, Shrinkage, Elastic Shortening and Relaxation of Steel Determined per AASHTO LRFD, Bridge Design Specifications, Second Edition, 1998, Section 5.9.5.
4. Strands shall be Released in Such a Manner as to Minimize Lateral Eccentricity.
5. Care shall be taken during Curing, Transportation and Erection to Avoid any Lateral Deflection of the Deck Plank.
6. Lifting Devices or Other Embedded Items used to Lift and Transport the Deck Plank shall be Located as Close as Possible to the Plank Centerline of Bearing. The Deck Plank Supplier shall Submit Details Indicating the Adequate Type, and Location of Lifting Devices for Approval. Approval by the Engineer does not Relieve the Contractor of His Responsibilities if the Deck Plank is Damaged due to Failure of the Lifting Devices.
7. Reinforcing to Conform to ASTM A615, Grade 60.
8. Strand Pattern shall be Symmetrical About the Longitudinal Centerline of the Deck Planks.
9. The Contractor shall Submit His Proposed Strand Pattern and Releasing Sequence to the Engineer for Approval.
10. The Contractor shall Incorporate all Holes, Inserts, and other Embedded Items Required in Deck Planks during Fabrication of the Deck Planks.
11. For Prestressed Concrete Deck Planks, the Contractor shall Measure and Record Slippage of Strands. Slippage is the Amount of Movement that a Point on the Strand at the End of the Girder Recedes into the Member after Detensioning. For Slippage Monitoring Purposes, Prior to Detensioning, Reference Marks shall be made on the Strands not more than Two Inches from the Surface of the Member End. The Movement of the Reference Mark shall be Measured to One-sixteenth of an Inch.
14. After Detensioning, the Strand Reference Marks shall be Preserved to Permit Measurements of Strand Movement to the Time the Strands are made Flush with the Member. The Contractor shall Submit His Proposed Method of Strand Slippage Measurement with the Shop Drawings. The Engineer will Monitor the Contractor's Method of Measurement and the Slippage Values Obtained.
15. Minimum Bearing for Precast Plank shall be 3".
16. Extend Prestressing Strands 6" past end of Plank.

PLANK CAMBER NOTES:

1. The Calculated Camber Includes the Effect of the Initial Prestress Force and the Weight of the Deck Plank after Removal from the Bed. Negative Values Shown for Calculated Camber Indicate a Net Upward Deflection. The Calculated Camber Value has been Multiplied by Applicable Factors Provided in PCI Handbook Table 4.6.2. to Approximate the Effect of Camber Growth and Concrete Creep. The Actual Camber shall not Exceed the Calculated Camber by more than One-half inch.
2. The Dead Load Deflection Includes the Multipliers of PCI Table 4.6.2.. See Prestressed Plank Table I this Sheet. The Dead Load Deflection has added the Camber and the Net Deflection is Shown in Table I.
3. Contractor shall Camber the Deck Plank with Cribbing Support During Storage to Account for the Calculated Dead Load Deflection in Order to Provide the Specified Finish Deck Elevations.
4. All Cambers and Deflections are in Inches.

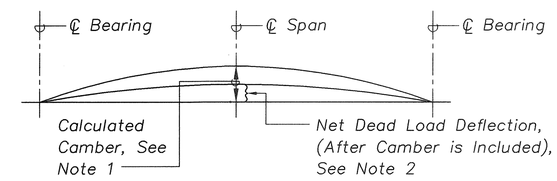

PLANK CAMBER DIAGRAM

Scale: None

PRESTRESSED PLANK TABLE I

Deck Plank Mark	Size (b x d)	Topping	Length ℄ to ℄ of Pier (1)	CGS (From Bot. of Plank) (inches)	Fe (kips)	Calculated Camber (+ Down)	Dead Load Deflection (+ Down)	Bottom Reinforcing (See Note 2)	Stirrups (@ 12")	Remarks
P1	46 x 10	14"	16'-0"	3.50	277	-0.13	0.14	6-#8	#5	Exterior Plank, See EB1, Sht. S-20
P1a	46 x 10	14"	16'-0"	3.50	277	-0.13	0.14	6-#8 ~~4-#5~~	#5	Exterior Plank, See EB2,3,4, Sht. S-20
P2	60 x 10	6"	16'-0"	3.44	361	-0.14	-0.09	4-#5	#4	Interior Plank, See Sht. S-20
P3	42 X 10	6"	16'-0"	3.44	296	-0.28	-0.13	4-#5	#4	Interior Plank, See Sht. S-20
P4	48 x 14	14"	25'-0"	4.69	578	-0.23	0.26	4-#5	#4	Exterior Plank, See Sht. S-25
P4a	48 x 14	14"	25'-0"	4.69	578	-0.23	0.26	4-#5	#4	Exterior Plank, See Sht. S-25
P5	36 x 14	6"	25'-0"	4.69	327	-0.18	0.01	4-#5	#4	Interior Plank, See Sht. S-25
P6	54 x 14	6"	25'-0"	4.67	503	-0.20	-0.02	4-#5	#4	Interior Plank, See Sht. S-25
P7	48 x 14	14"	11'-0"	4.69	145	-0.01	-0.00	4-#5	#4	Exterior Plank, See Sheet S-36
P8	36 x 14	6"	11'-0"	4.69	101	-0.01	-0.01	4-#5	#4	Interoir Plank, See Sheet S-36

Notes:

1. Refer to Pier Details to Determine Distance from ℄ Pier to End of Deck Plank.
2. Refer to Pier Detail for Extension of 6-#8 Bottom Reinforcing beyond Ends at Deck Plank.
3. Refer to Deck Plank Section for Layout Arrangement of Reinforcing.
4. Fe in Prestressed Plank Table I is After all Losses.

MYRON G. OKUBO LICENSED PROFESSIONAL ENGINEER No. 4320-S HAWAII, U.S.A.

THIS WORK WAS PREPARED BY ME OR UNDER MY SUPERVISION

Myron Okubo

DATE	REVISION

STATE OF HAWAII
DEPARTMENT OF TRANSPORTATION
HIGHWAYS DIVISION

PRESTRESSED PLANK NOTES

HAWAII BELT ROAD
KUPAPAULUA BRIDGE WIDENING
HAMAKUA DISTICT

Federal Aid Project No. BR-019-2(38)

Scale: As Noted Date: June 23, 2003

SHEET No. S-31 OF 36 SHEETS

ORIGINAL PLAN | SURVEY PLOTTED BY | DRAWN BY | TRACED BY | DESIGNED BY | QUANTITIES BY | CHECKED BY | DATE
NOTEBOOK No.

Path: L:\WOA\6670-01 Kupapaulua Bridge\Struct\NEW-1 Filename: S31 Plot date: Sep 25, 2006-08:06:13pm CAD User: skidani. Xref Filename: | Border | AUTODATE |

"AS-BUILT"

FED. ROAD DIST. NO.	STATE	FED. AID PROJ. NO.	FISCAL YEAR	SHEET NO.	TOTAL SHEETS
HAWAII	HAW.	BR-019-2(38)	2002	75A	79

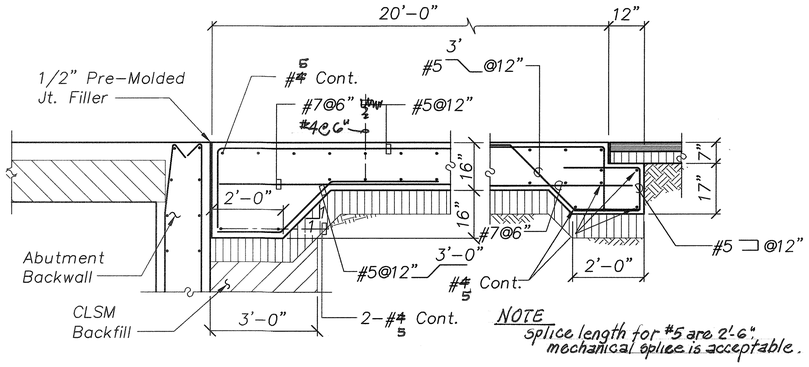

1 S-20 S-32 **APPROACH SLAB DETAIL**
Scale: 1/2"=1'-0"

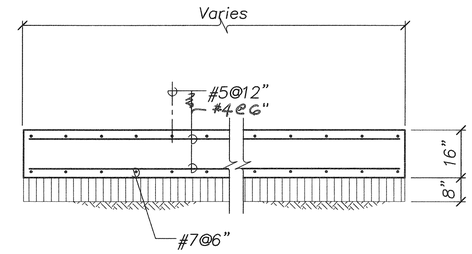

2 S-20 S-32 **APPROACH SLAB TRANSVERSE SECTION**
Scale: 1/2"=1'-0"

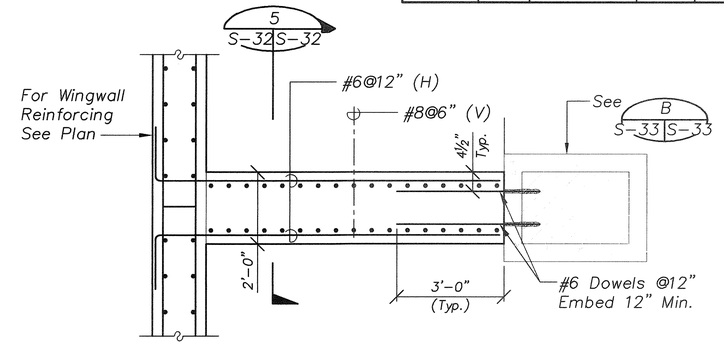

3 S-15 S-32 **WALL REINFORCING DETAIL**
Scale: 1/2"=1'-0"

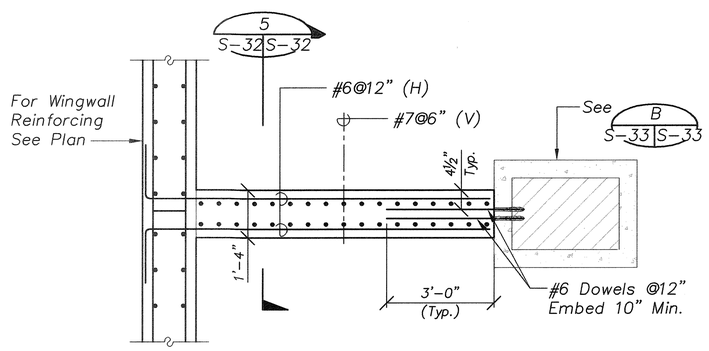

4 S-11 S-32 **WALL REINFORCING DETAIL**
Scale: 1/2"=1'-0"

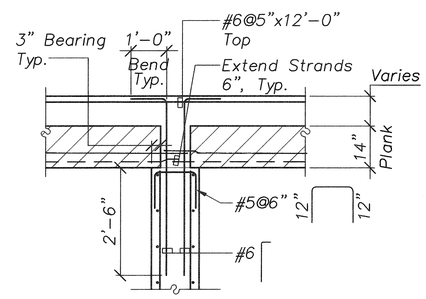

Note:
Deck and Wall Reinforcing not Shown for Clarity.

5 S-32 S-32 **DETAIL**
Scale: 1/2"=1'-0"

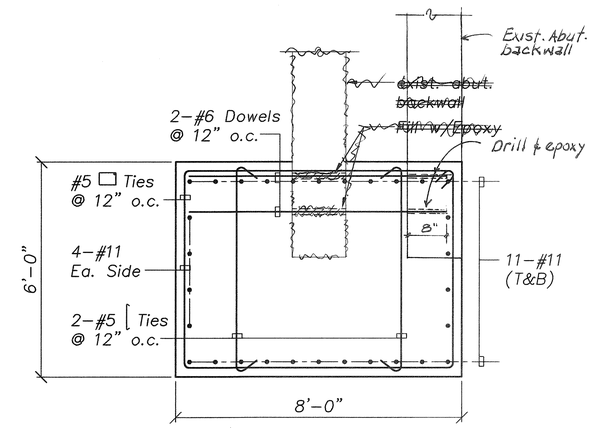

6 S-14 S-32 **SECTION**
Scale: 1/2"=1'-0"

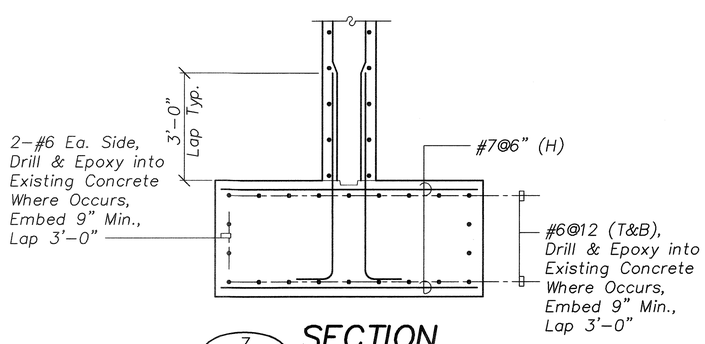

7 S-33 S-32 **SECTION**
S-11, S-15,
Scale: 1/2"=1'-0"

GRAPHIC SCALES
0 2' 4' 6'
SCALE: 1/2" = 1'-0"

ORIGINAL PLAN	SURVEY PLOTTED BY	DATE
	DRAWN BY	
NOTEBOOK	TRACED BY	
	DESIGNED BY	
No.	QUANTITIES BY	
	CHECKED BY	

MYRON G. OKUBO LICENSED PROFESSIONAL ENGINEER No. 4320-S HAWAII, U.S.A.

THIS WORK WAS PREPARED BY ME OR UNDER MY SUPERVISION

Myron Okubo

DATE	REVISION

STATE OF HAWAII
DEPARTMENT OF TRANSPORTATION
HIGHWAYS DIVISION

MISCELLANEOUS DETAILS

HAWAII BELT ROAD
KUPAPAULUA BRIDGE WIDENING
HAMAKUA DISTICT
Federal Aid Project No. BR-019-2(38)

Scale: As Noted Date: June 23, 2003

SHEET No. S-32 OF 36 SHEETS

"AS-BUILT"

FED. ROAD DIST. NO.	STATE	FED. AID PROJ. NO.	FISCAL YEAR	SHEET NO.	TOTAL SHEETS
HAWAII	HAW.	BR-019-2(38)	2002	76A	79

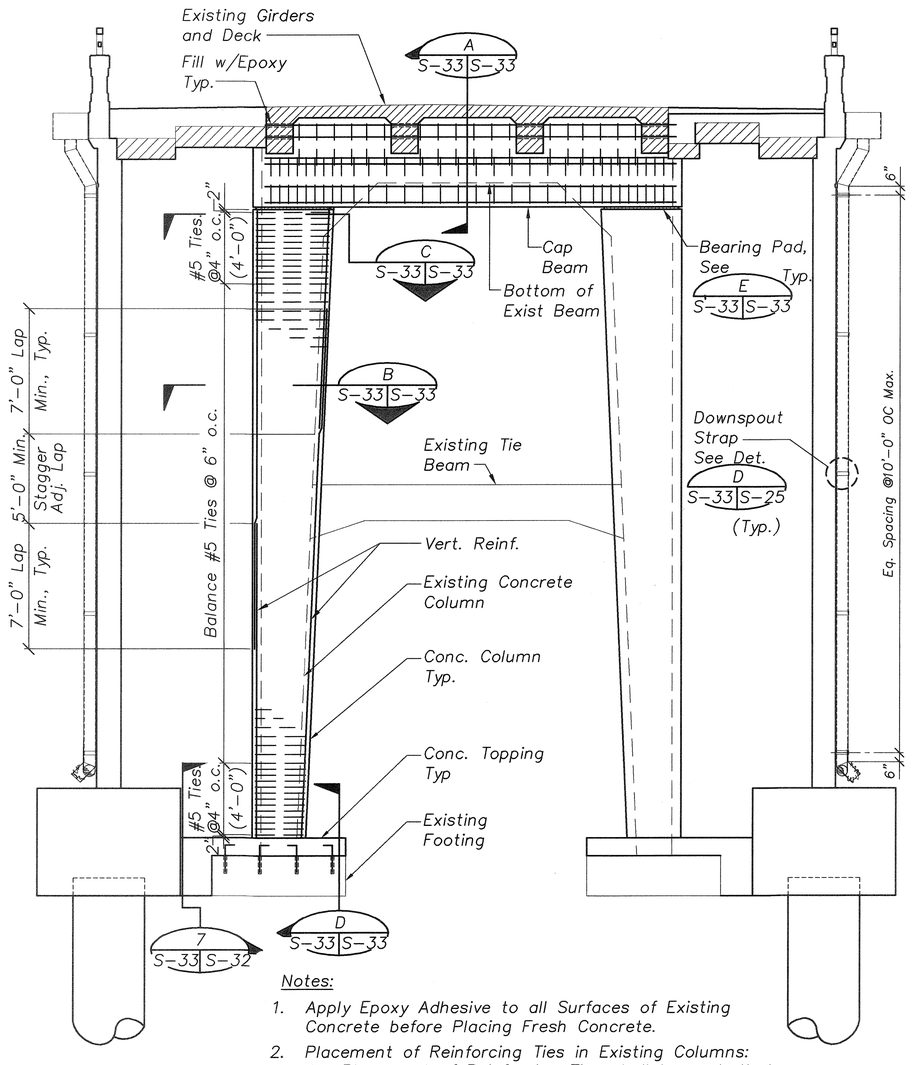

Notes:

1. Apply Epoxy Adhesive to all Surfaces of Existing Concrete before Placing Fresh Concrete.
2. Placement of Reinforcing Ties in Existing Columns:
   A. Placement of Reinforcing Ties shall be such that the Bend in the Ties are in Contact with the Main Reinforcing Bars of the Column.
   B. Only One (1) Face of Existing Column shall be Drilled at a Time for Placement for Reinforcing Ties.
   C. Drilled Holes in Existing Columns shall be Cleaned, Filled with Epoxy, and Reinforcing Ties Set in Place Within an Eight (8) Hour Work Day.

1 S-33 S-33 PIER NO. 1 ELEVATION

Scale: 1/4"=1'-0" (Pier No. 17 and 18 Similar)

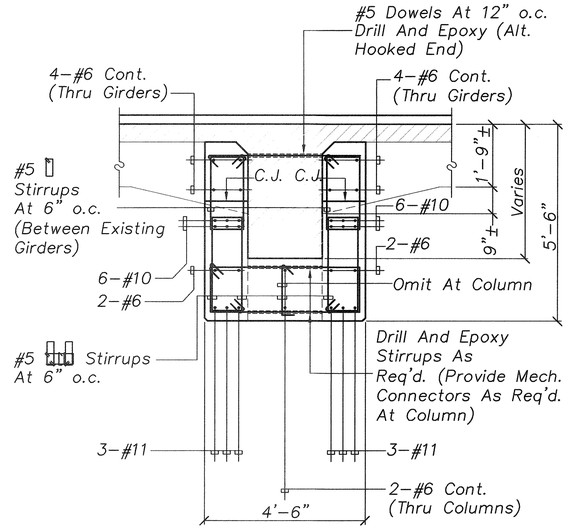

A S-33 S-33 SECTION

Scale: 1/2"=1'-0"

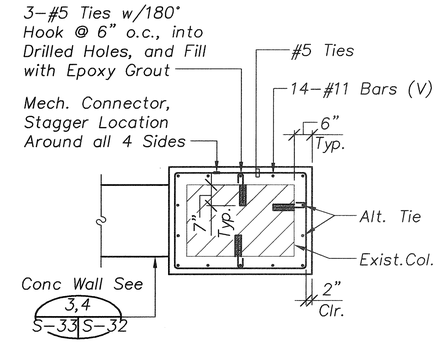

B S-33 S-33 SECTION

Scale: 1/2"=1'-0"

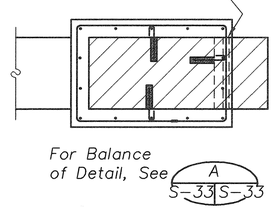

C S-33 S-33 SECTION

Scale: 1/2"=1'-0"

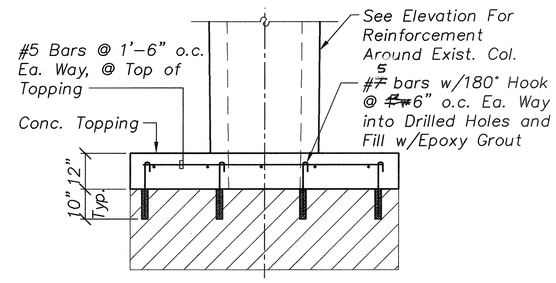

D S-33 S-33 SECTION

Scale: 1/2"=1'-0"

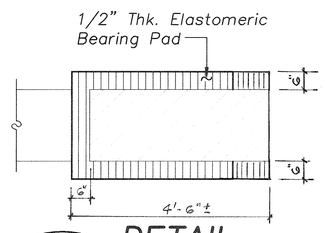

E S-33 S-33 DETAIL

Scale: 1/2"=1'-0"

GRAPHIC SCALES

0 4' 8' 12'
SCALE: 1/4" = 1'-0"

0 2' 4' 6'
SCALE: 1/2" = 1'-0"

ORIGINAL PLAN	SURVEY PLOTTED BY	DATE
	DRAWN BY	
	TRACED BY	
NOTEBOOK	DESIGNED BY	
	QUANTITIES BY	
No.	CHECKED BY	

MYRON G. OKUBO LICENSED PROFESSIONAL ENGINEER No. 4320-S HAWAII, U.S.A.

THIS WORK WAS PREPARED BY ME OR UNDER MY SUPERVISION

Myron Okubo

DATE	REVISION

STATE OF HAWAII
DEPARTMENT OF TRANSPORTATION
HIGHWAYS DIVISION

FOUNDATION SECTIONS AND DETAILS
HAWAII BELT ROAD
KUPAPAULUA BRIDGE WIDENING
HAMAKUA DISTICT
Federal Aid Project No. BR-019-2(38)

Scale: As Noted Date: June 23, 2003

SHEET No. S-33 OF 36 SHEETS

FED. ROAD DIST. NO.	STATE	FED. AID PROJ. NO.	FISCAL YEAR	SHEET NO.	TOTAL SHEETS
HAWAII	HAW.	BR-019-2(38)	2002	77A	79

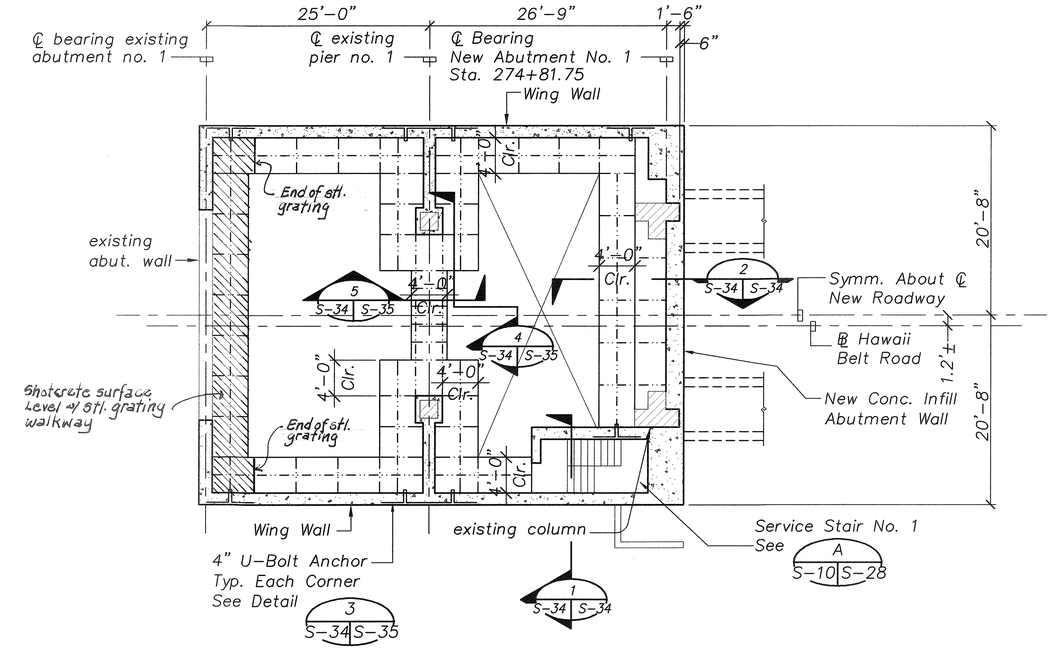

A ABUTMENT NO. 1
S-34 S-34 Scale: 1/8"=1'-0"

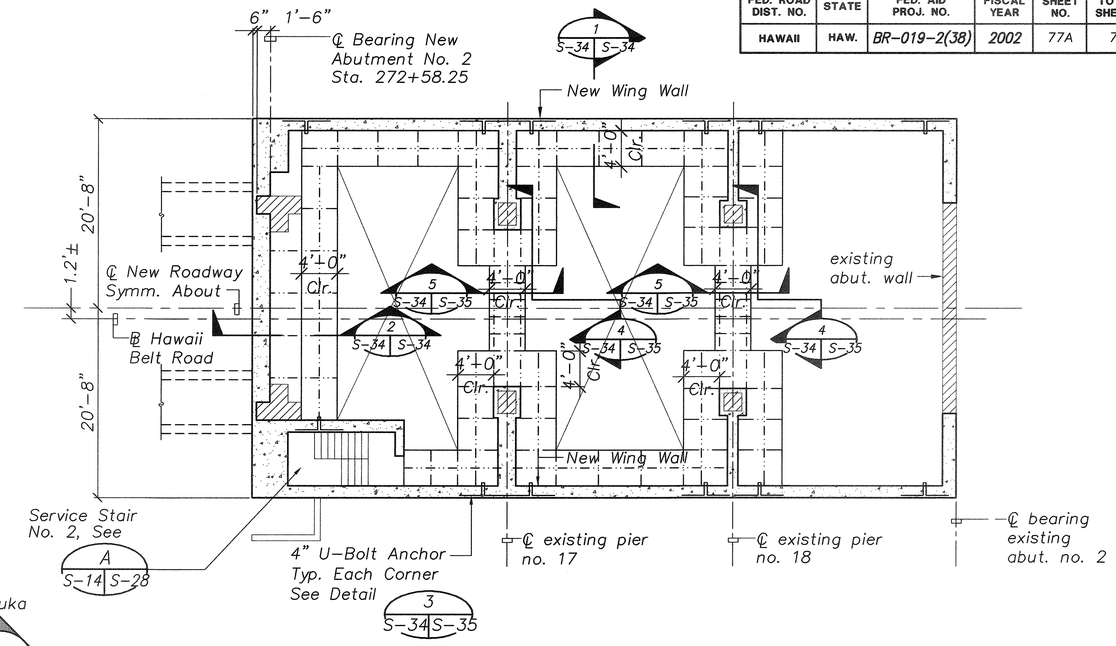

B ABUTMENT NO. 2
S-34 S-34 Scale: 1/8"=1'-0"

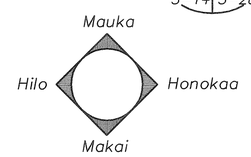

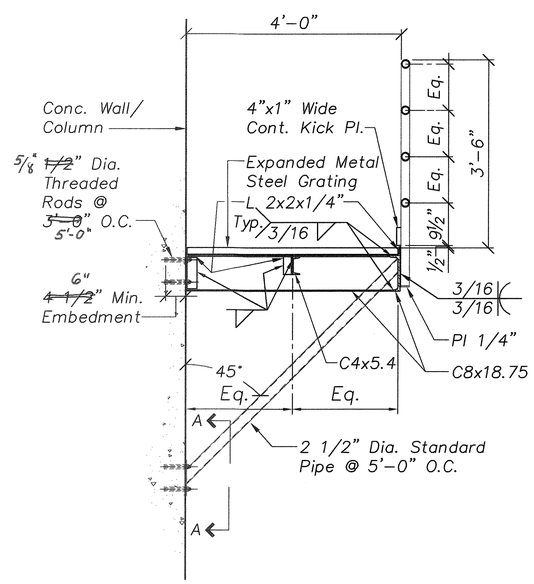

1 CATWALK DETAIL
S-34 S-34 Scale: 3/4"=1'-0"

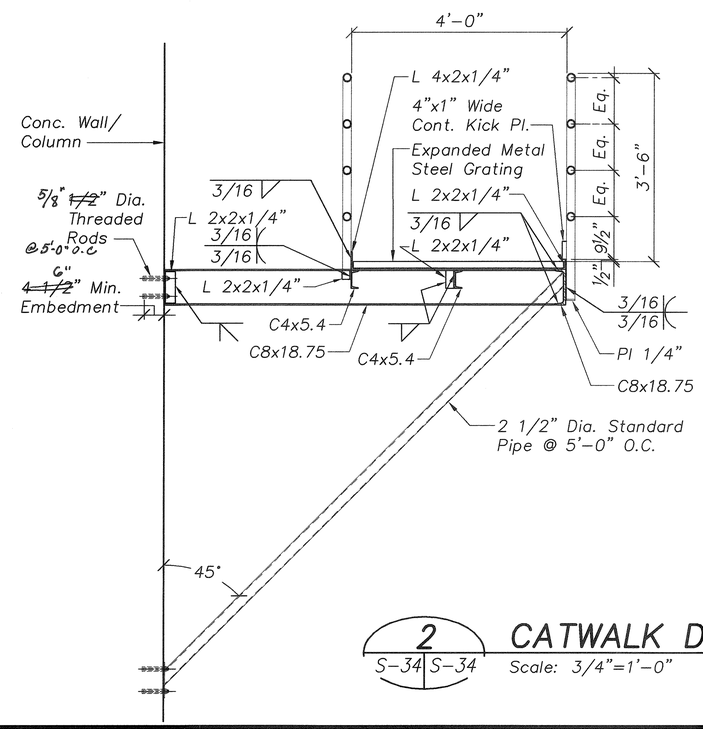

2 CATWALK DETAIL
S-34 S-34 Scale: 3/4"=1'-0"

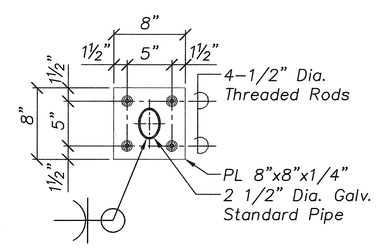

SECTION 'A-A'
Scale: 1 1/2"=1'-0"

GRAPHIC SCALES

0 8' 16' 24'
SCALE: 1/8" = 1'-0"

0 1' 2' 3' 4'
SCALE: 3/4" = 1'-0"

0 1' 2'
SCALE: 1-1/2" = 1'-0"

MYRON G. OKUBO LICENSED PROFESSIONAL ENGINEER No. 4320-S HAWAII, U.S.A.

THIS WORK WAS PREPARED BY ME OR UNDER MY SUPERVISION

Myron Okubo

DATE	REVISION

STATE OF HAWAII
DEPARTMENT OF TRANSPORTATION
HIGHWAYS DIVISION

CATWALK PLAN & DETAILS AT ABUTMENT NO. 1 & NO. 2
HAWAII BELT ROAD
KUPAPAULUA BRIDGE WIDENING
HAMAKUA DISTICT
Federal Aid Project No. BR-019-2(38)

Scale: As Noted Date: June 23, 2003

SHEET No. S-34 OF 36 SHEETS

ORIGINAL PLAN | SURVEY PLOTTED BY | DRAWN BY | TRACED BY | DESIGNED BY | QUANTITIES BY | CHECKED BY | DATE
NOTEBOOK No.

Path: L:\WGA\6670-01 Kupapaulua Bridge\Struct\NEW-1 Filename: S34 Plot date: Sep 25, 2006-08:07:03pm CAD User: skidani. Xref Filename: | Border | AUTODATE |

"AS-BUILT"

FED. ROAD DIST. NO.	STATE	FED. AID PROJ. NO.	FISCAL YEAR	SHEET NO.	TOTAL SHEETS
HAWAII	HAW.	BR-019-2(38)	2002	78	79

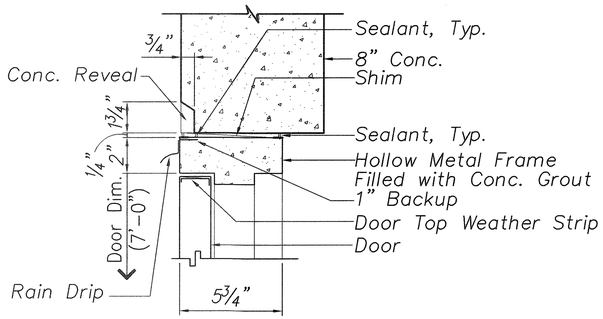

HEAD (JAMB SIM.)

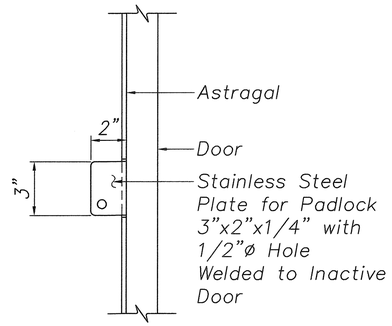

ELEVATION

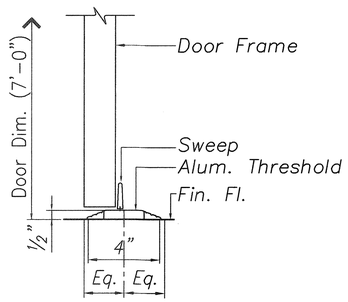

THRESHOLD

1 S-35 | S-35 DOOR DETAIL
Scale: 3"=1'-0"

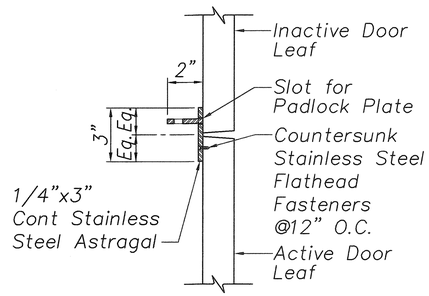

PLAN

2 S-35 | S-35 ASTRAGAL
Scale: 3"=1'-0"

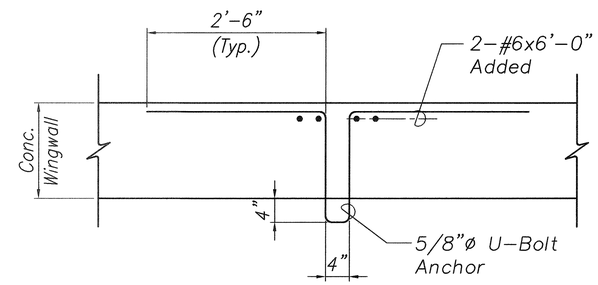

Notes:

1. Wall Reinforcing not Shown for Clarity.
2. U-Bolt Anchors to be Placed 6'-0" Above Finished Floor.

3 S-34 | S-35 DETAIL
Scale: 1"=1'-0"

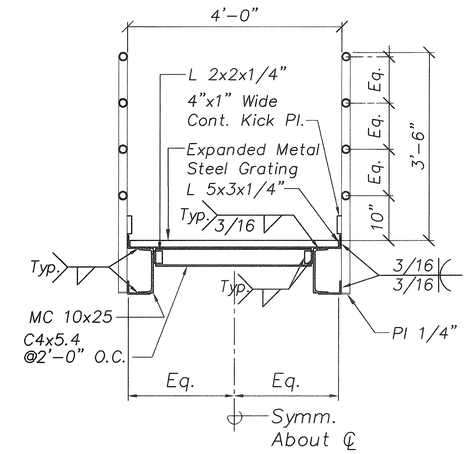

5 S-34 | S-35 SECTION
Scale: 3/4"=1'-0"

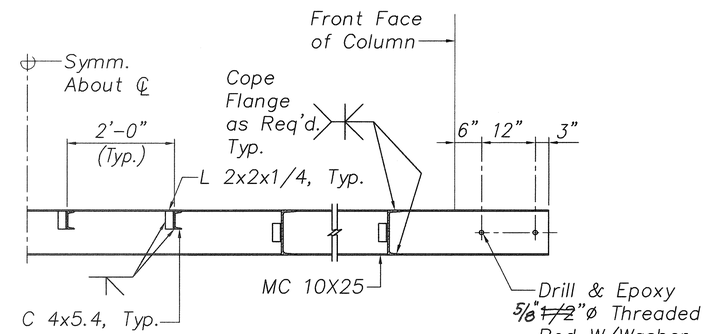

4 S-34 | S-35 ELEVATION
Scale: 3/4"=1'-0"

GRAPHIC SCALES
6" 4" 2" 0 6"
SCALE: 3"=1'-0"

MYRON G. OKUBO
LICENSED PROFESSIONAL ENGINEER
No. 4320-S
HAWAII, U.S.A.

THIS WORK WAS PREPARED BY ME OR UNDER MY SUPERVISION

Myron Okubo

DATE	REVISION

STATE OF HAWAII
DEPARTMENT OF TRANSPORTATION
HIGHWAYS DIVISION

MISCELLANEOUS DETAILS

HAWAII BELT ROAD
KUPAPAULUA BRIDGE WIDENING
HAMAKUA DISTICT
Federal Aid Project No. BR-019-2(38)

Scale: As Noted Date: June 23, 2003

SHEET No. S-35 OF 36 SHEETS

ORIGINAL PLAN
SURVEY PLOTTED BY ____ DATE
DRAWN BY : :
TRACED BY : :
DESIGNED BY : :
NOTEBOOK QUANTITIES BY : :
No. ____ CHECKED BY : :

Path: L:\WOA\6670-01 Kupapaulua Bridge\Struct\NEW-1 Filename: S35 Plot date: Sep 25, 2006-08:07:27pm CAD User: skidani. Xref Filename: | Border | AUTODATE |

"AS-BUILT"

FED. ROAD DIST. NO.	STATE	FED. AID PROJ. NO.	FISCAL YEAR	SHEET NO.	TOTAL SHEETS
HAWAII	HAW.	BR-019-2(38)	2002	36	79

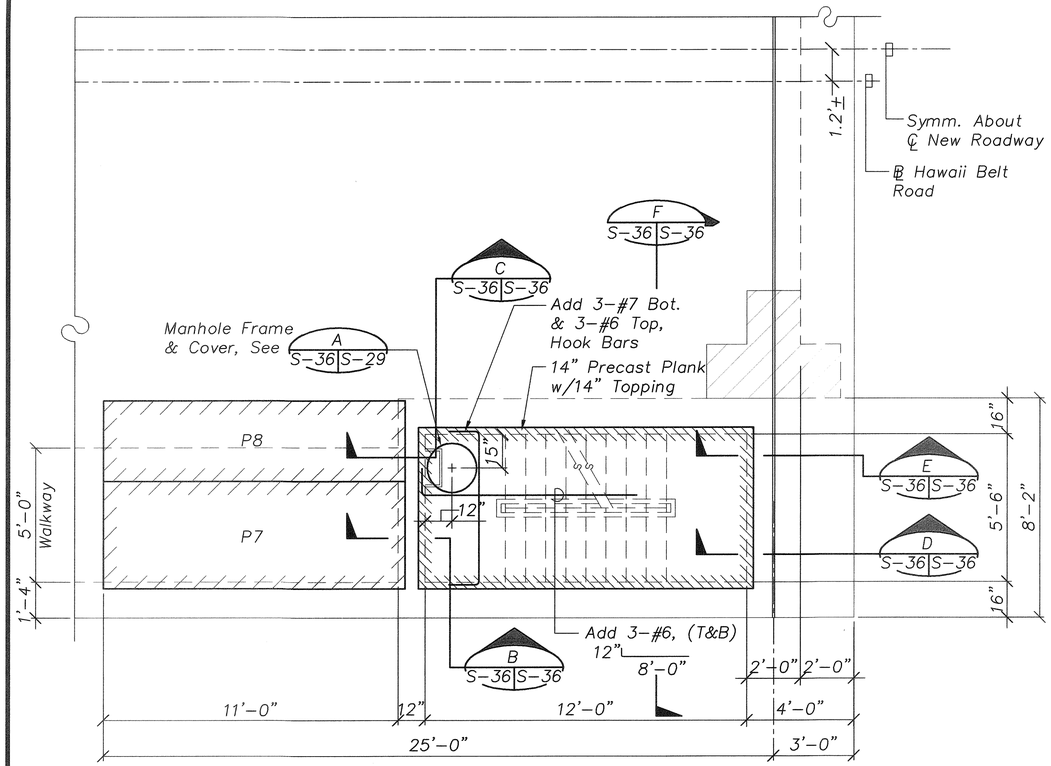

A S-24 S-36 **PARTIAL PLAN** Scale: 3/8"=1'-0"

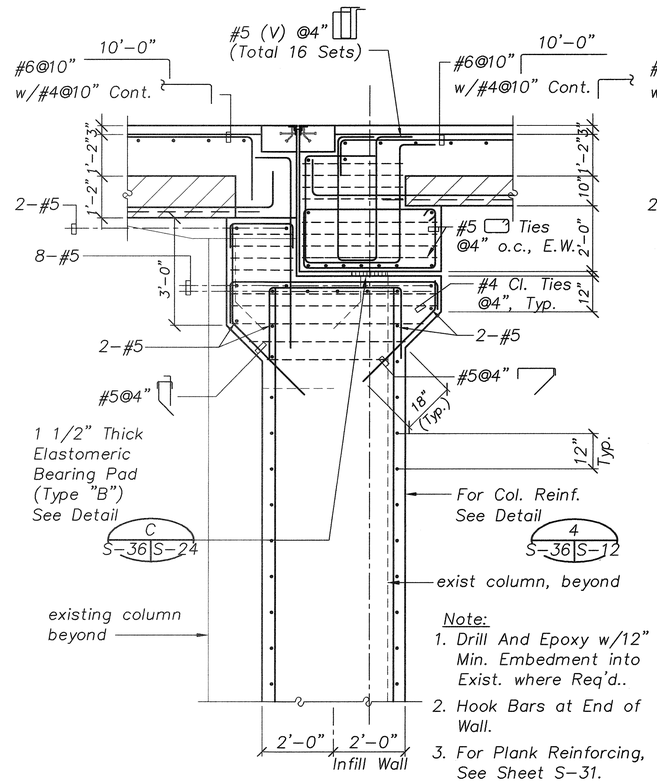

Note:
1. Drill And Epoxy w/12" Min. Embedment into Exist. where Req'd..
2. Hook Bars at End of Wall.
3. For Plank Reinforcing, See Sheet S-31.

D S-23, S-36 S-36 **SECTION** Scale: 1/2"=1'-0"

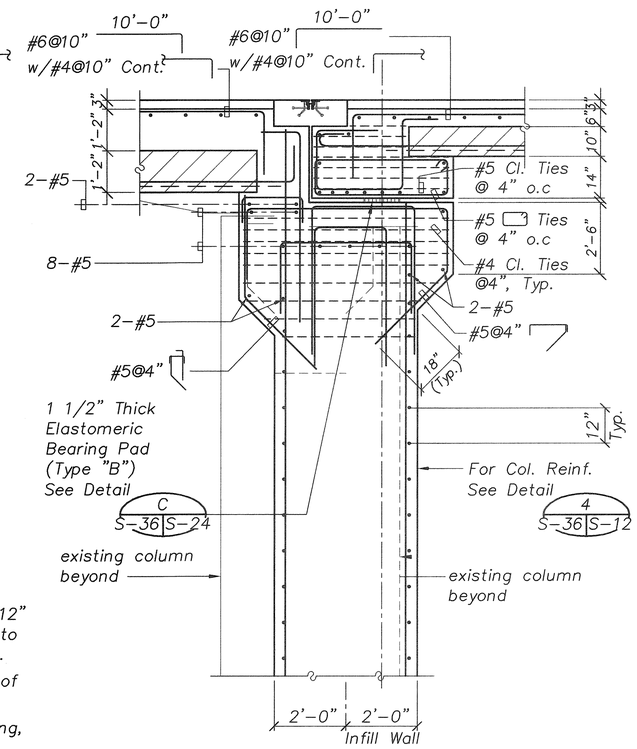

E S-23, S-36 S-36 **SECTION** Scale: 1/2"=1'-0"

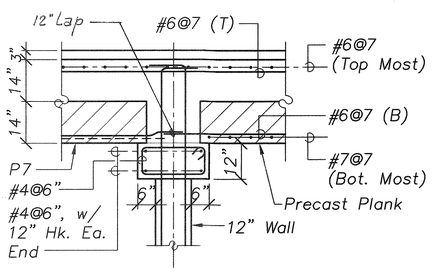

B S-36 S-36 **DETAIL** Scale: 1/2"=1'-0"

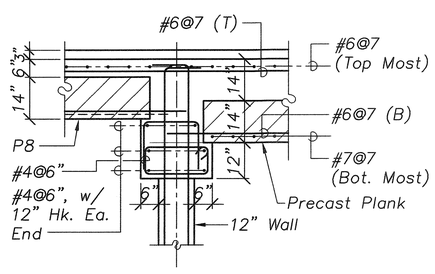

C S-36 S-36 **DETAIL** Scale: 1/2"=1'-0"

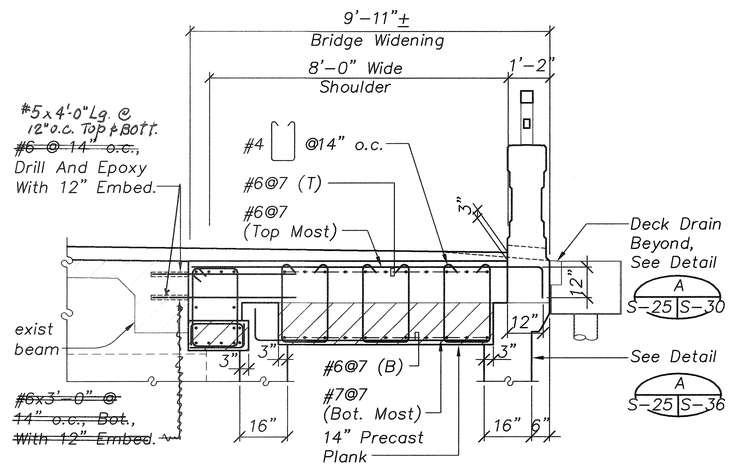

F S-36 S-36 **DETAIL** Scale: 1/2"=1'-0"

GRAPHIC SCALES

0 4' 8' 12'
SCALE: 1/4" = 1'-0"

0 2' 4' 6'
SCALE: 1/2" = 1'-0"

MYRON G. OKUBO LICENSED PROFESSIONAL ENGINEER No. 4320-S HAWAII, U.S.A.

THIS WORK WAS PREPARED BY ME OR UNDER MY SUPERVISION

Myron Okubo

DATE	REVISION

STATE OF HAWAII
DEPARTMENT OF TRANSPORTATION
HIGHWAYS DIVISION

PARTIAL PLAN, SECTIONS, AND DETAILS
HAWAII BELT ROAD
KUPAPAULUA BRIDGE WIDENING
HAMAKUA DISTICT
Federal Aid Project No. BR-019-2(38)

Scale: As Noted Date: June 23, 2003

SHEET No. S-36 OF 36 SHEETS

ORIGINAL PLAN	SURVEY PLOTTED BY	DATE
NOTEBOOK	DRAWN BY	
	TRACED BY	
	DESIGNED BY	
	QUANTITIES BY	
No.	CHECKED BY	

Path: L:\WOA\6670-01 Kupapaulua Bridge\Dwnsp Filename: S36 Plot date: Sep 25, 2006-08:05:19pm CAD User: skidani, Xref Filename: | Border | AUTODATE |

"AS-BUILT"

FED. ROAD DIST. NO.	STATE	FED. AID PROJ. NO.	FISCAL YEAR	SHEET NO.	TOTAL SHEETS
HAWAII	HAW.	BR-019-2(38)	2004		79

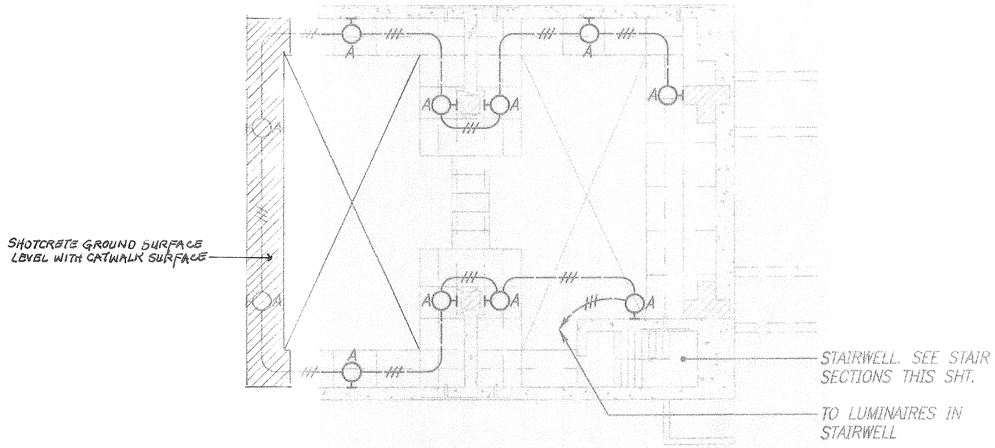

SHOTCRETE GROUND SURFACE LEVEL WITH CATWALK SURFACE

STAIRWELL. SEE STAIR SECTIONS THIS SHT.

TO LUMINAIRES IN STAIRWELL

ABUTMENT NO. 1 LIGHTING PLAN

SCALE: 1/8"=1'-0"

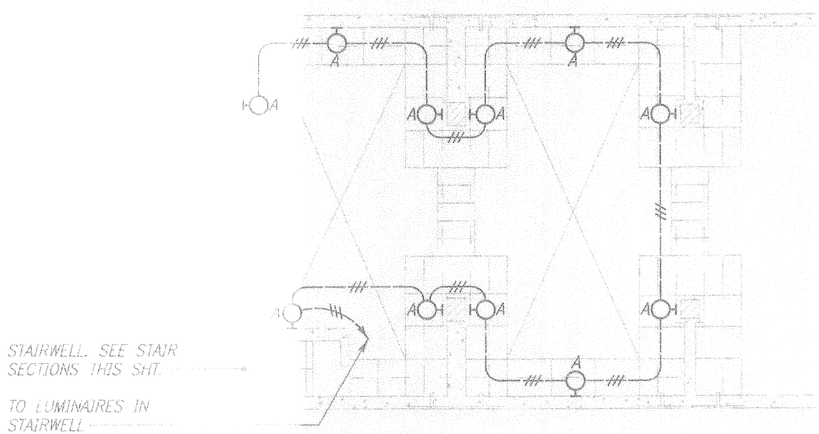

STAIRWELL. SEE STAIR SECTIONS THIS SHT.

TO LUMINAIRES IN STAIRWELL

ABUTMENT NO. 2 LIGHTING PLAN

SCALE: 1/8"=1'-0"

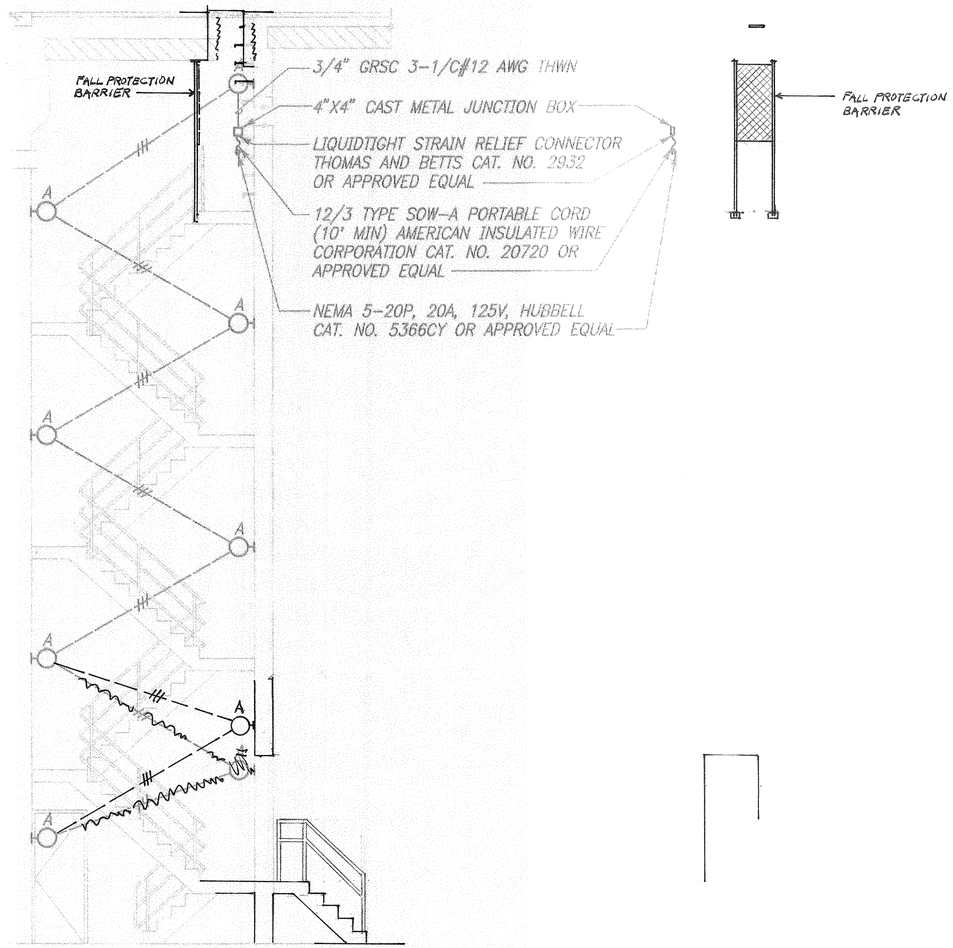

3/4" GRSC 3-1/C#12 AWG THWN

4"X4" CAST METAL JUNCTION BOX

LIQUIDTIGHT STRAIN RELIEF CONNECTOR THOMAS AND BETTS CAT. NO. 2932 OR APPROVED EQUAL

12/3 TYPE SOW-A PORTABLE CORD (10' MIN) AMERICAN INSULATED WIRE CORPORATION CAT. NO. 20720 OR APPROVED EQUAL

NEMA 5-20P, 20A, 125V, HUBBELL CAT. NO. 5366CY OR APPROVED EQUAL

STAIR SECTIONS

SCALE: 1/4"=1'-0"

MELVIN H. YOKOTA
LICENSED PROFESSIONAL ENGINEER
No. 4156-E
HAWAII, U.S.A.

THIS WORK WAS PREPARED BY ME OR UNDER MY SUPERVISION.

Melvin H. Yokota

DATE	REVISION

STATE OF HAWAII
DEPARTMENT OF TRANSPORTATION
HIGHWAYS DIVISION
LIGHTING PLANS
AND SECTIONS
HAWAII BELT ROAD
KUPAPAULUA BRIDGE WIDENING
HAMAKUA DISTICT
Federal Aid Project No. BR-019-2(38)
Scale: As Noted Date: January 27, 2004

SHEET No. E-2 OF E-2 SHEETS

ORIGINAL PLAN
NOTEBOOK
No.
SURVEY PLOTTED BY
DRAWN BY
TRACED BY
DESIGNED BY
QUANTITIES BY
CHECKED BY
DATE

"AS-BUILT"