FED. ROAD DIST. NO.	STATE	FED. AID PROJ. NO.	FISCAL YEAR	SHEET NO.	TOTAL SHEETS
HAWAII	HAW.	BR-019-2(26)	2002	48	155

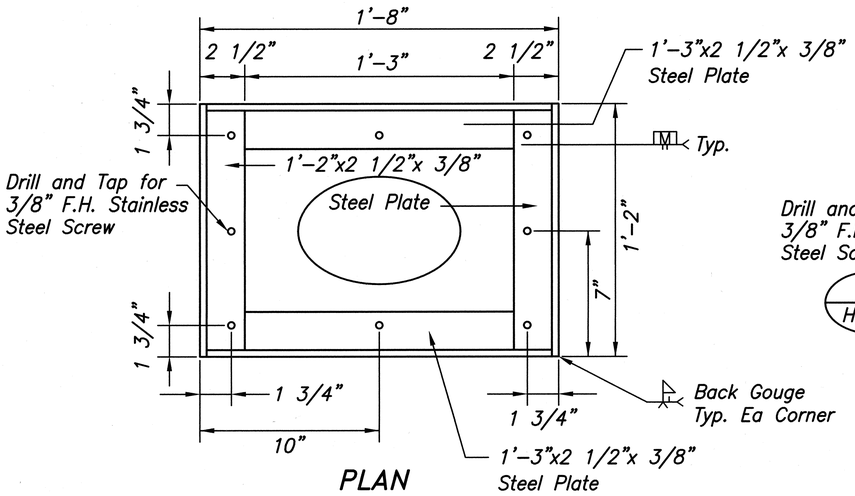

PLAN

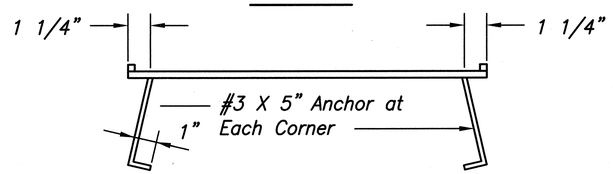

SECTION

DETAILS OF STEEL FRAME

DETAILS OF STEEL FRAME AND COVER FOR CLEANOUT

SCALE: 3"=1'-0"

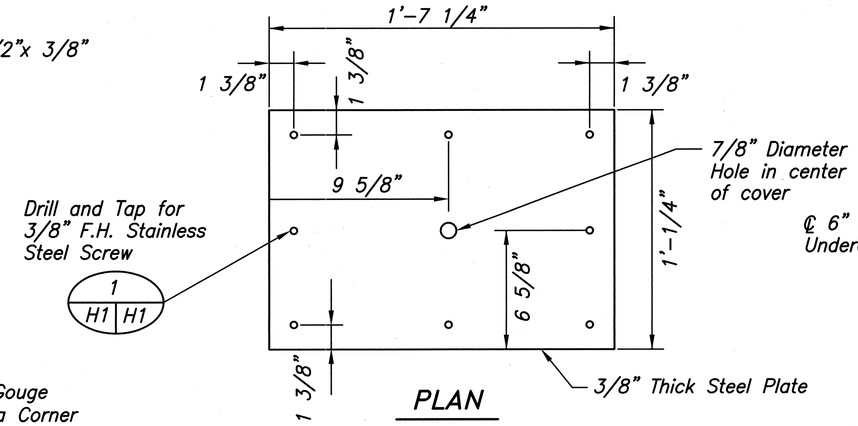

PLAN

DETAIL OF STEEL COVER

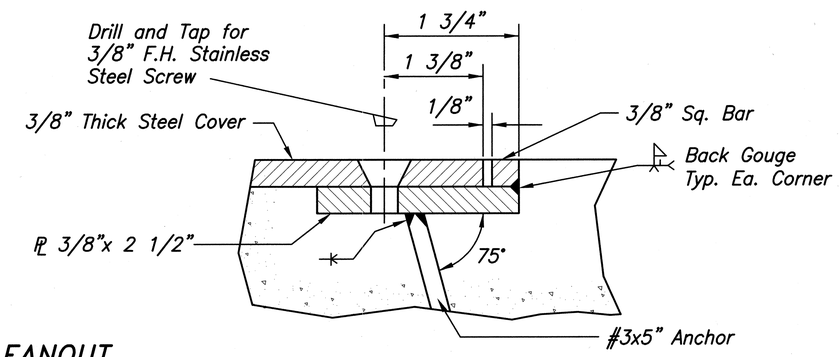

DETAIL 1 H1 H1

FULL SIZE

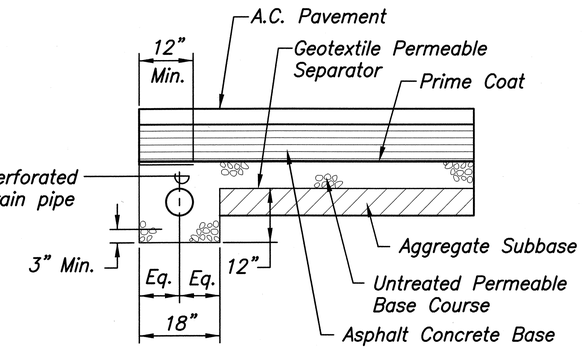

TYPICAL SECTION

6" PERFORATED UNDERDRAIN

SCALE: 3/4"=1'-0"

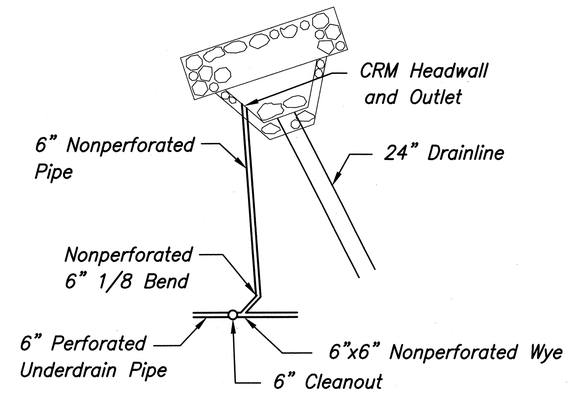

PLAN

CONNECTION TO HEADWALL (TYP.)

SCALE: 1/8"=1'-0"

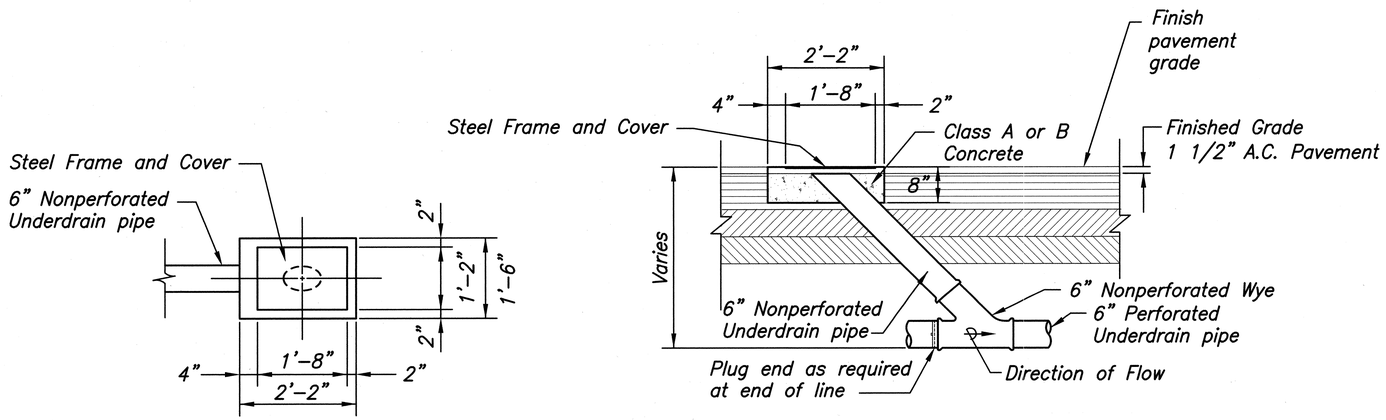

PLAN

TYPICAL DETAILS OF CLEANOUT

SECTION

SCALE: 3/4"=1'-0"

SURVEY PLOTTED BY	DATE
SURVEY BY	"
TRACED BY	"
DESIGNED BY	"
QUANTITIES BY	"
CHECKED BY	"
ORIGINAL PLAN	NOTE BOOK	No.

Proj. No. 96048-00

R:\keaiaeng\UD-DET.DWG

6/27/01

DANIEL S. MIYASATO
LICENSED PROFESSIONAL ENGINEER
No. 3443-C
HAWAII U.S.A.

SATO & ASSOCIATES, INC.

THIS WORK WAS PREPARED BY ME OR UNDER MY SUPERVISION

STATE OF HAWAII
DEPARTMENT OF TRANSPORTATION
HIGHWAYS DIVISION

UNDERDRAIN DETAIL

HAWAII BELT ROAD

KEALAKAHA STREAM BRIDGE REPLACEMENT

PROJECT NO. BR-019-2 (26)

SCALE: AS NOTED DATE: NOVEMBER 2001

SHEET No. 1 OF 1 SHEETS