FED. ROAD DIST. NO.	STATE	FED. AID PROJ. NO.	FISCAL YEAR	SHEET NO.	TOTAL SHEETS
HAWAII	HAW.	BR-019-2(44)	1998	11	61

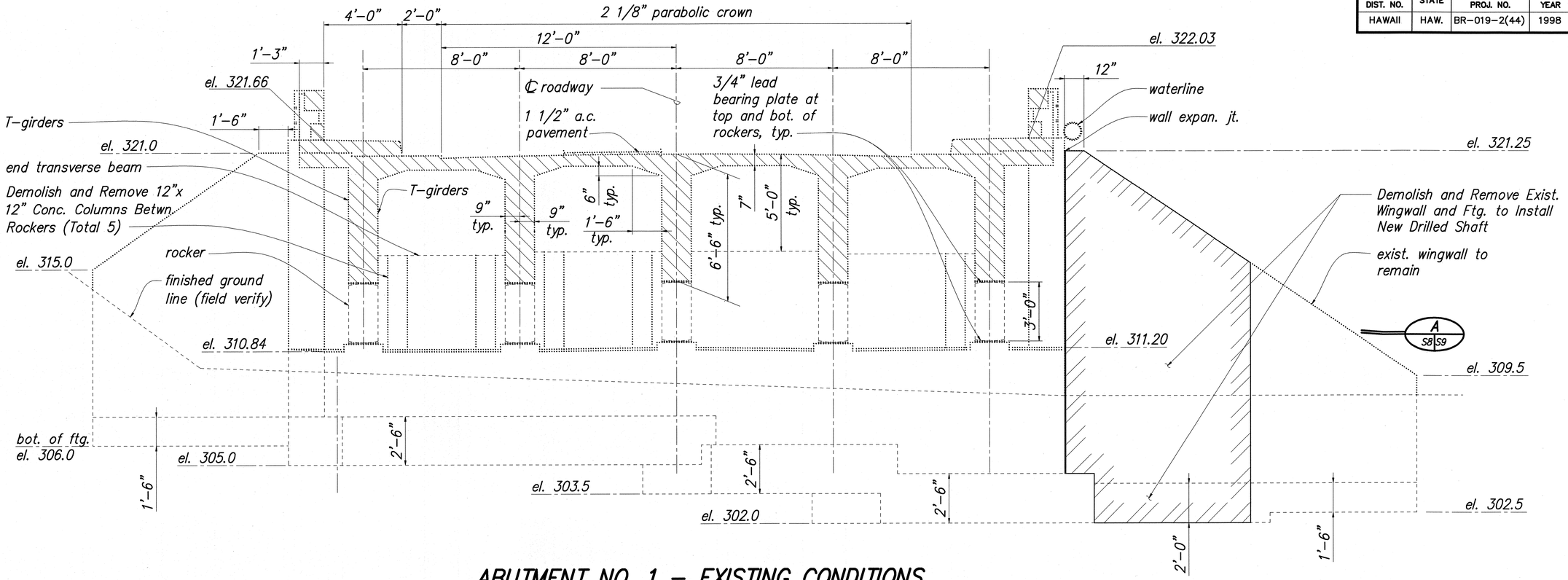

ABUTMENT NO. 1 – EXISTING CONDITIONS
NORMAL TO GIRDERS ELEVATION

SCALE: 3/8"=1'-0"

A
S1 S8

ORIGINAL PLAN	SURVEY PLOTTED BY	DATE
	SURVEY BY	"
	TRACED BY	"
NOTE BOOK	DESIGNED BY	"
	QUANTITIES BY	"
No.	CHECKED BY	"

E:\1997\9702000\DWGS\DETL\97020D04.DWG 05/22/98 08:51 CEC

MAY 28 1998

LEE T. TAKUSHI
LICENSED PROFESSIONAL ENGINEER
NO. 4767-S
HAWAII USA

STATE OF HAWAII
DEPARTMENT OF TRANSPORTATION
HIGHWAYS DIVISION

MOANALULU BRIDGE
ABUTMENT NO. 1
EXISTING CONDITIONS ELEVATION

HAWAII BELT ROAD, SEISMIC RETROFIT OF VARIOUS BRIDGES,
VICINITY OF LAUPAHOEHOE
FEDERAL AID PROJECT NO. BR-019-2(44)

SCALE: AS NOTED DATE: APRIL 1998

SHEET No. S8 OF 58 SHEETS

FED. ROAD DIST. NO.	STATE	FED. AID PROJ. NO.	FISCAL YEAR	SHEET NO.	TOTAL SHEETS
HAWAII	HAW.	BR-019-2(44)	1998	12	61

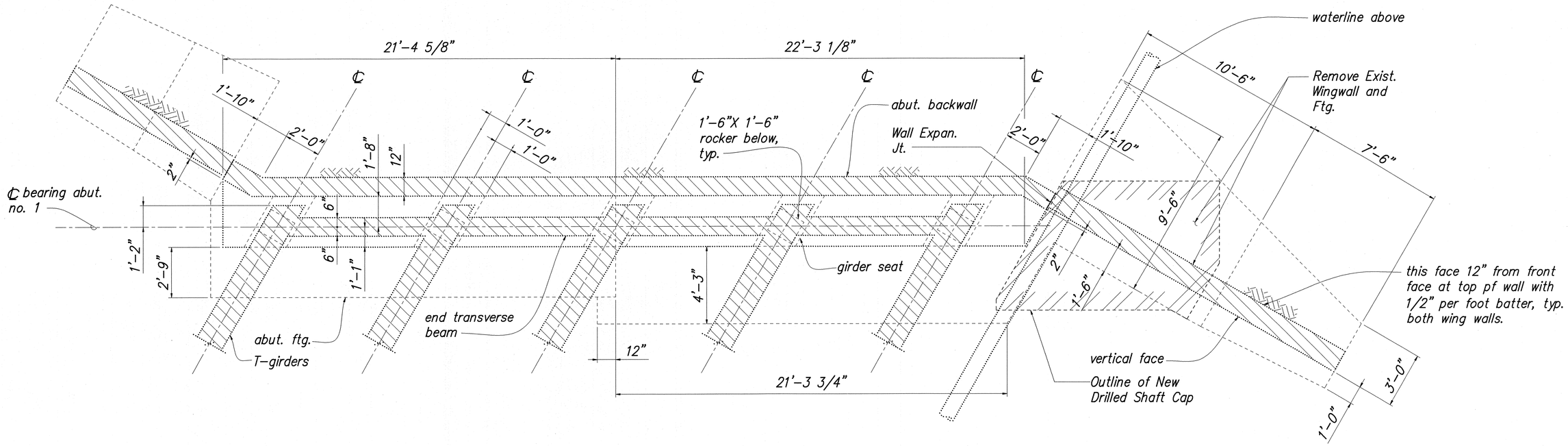

ABUTMENT NO. 1
EXISTING CONDITIONS – SECTION PLAN

SCALE: 3/8"=1'-0"

A S8 S9

ORIGINAL PLAN	SURVEY PLOTTED BY	DATE
	DRAWN BY	"
	TRACED BY	"
NOTE BOOK	DESIGNED BY	"
	QUANTITIES BY	"
No.	CHECKED BY	"

T:\1997\9702000\DWGS\DETL\9702D039.DWG 05/22/98 09:41 CEC

MAY 22 1998

LEE T. TAKUSHI LICENSED PROFESSIONAL ENGINEER NO. 4767-S HAWAII USA

STATE OF HAWAII
DEPARTMENT OF TRANSPORTATION
HIGHWAYS DIVISION

MOANALULU BRIDGE
ABUTMENT NO. 1
EXISTING CONDITIONS SECTION

HAWAII BELT ROAD, SEISMIC RETROFIT OF VARIOUS BRIDGES,
VICINITY OF LAUPAHOEHOE
FEDERAL AID PROJECT NO. BR-019-2(44)

SCALE: AS NOTED DATE: APRIL 1998

SHEET No. S9 OF 58 SHEETS

FED. ROAD DIST. NO.	STATE	FED. AID PROJ. NO.	FISCAL YEAR	SHEET NO.	TOTAL SHEETS
HAWAII	HAW.	BR-019-2(44)	1998	13	61

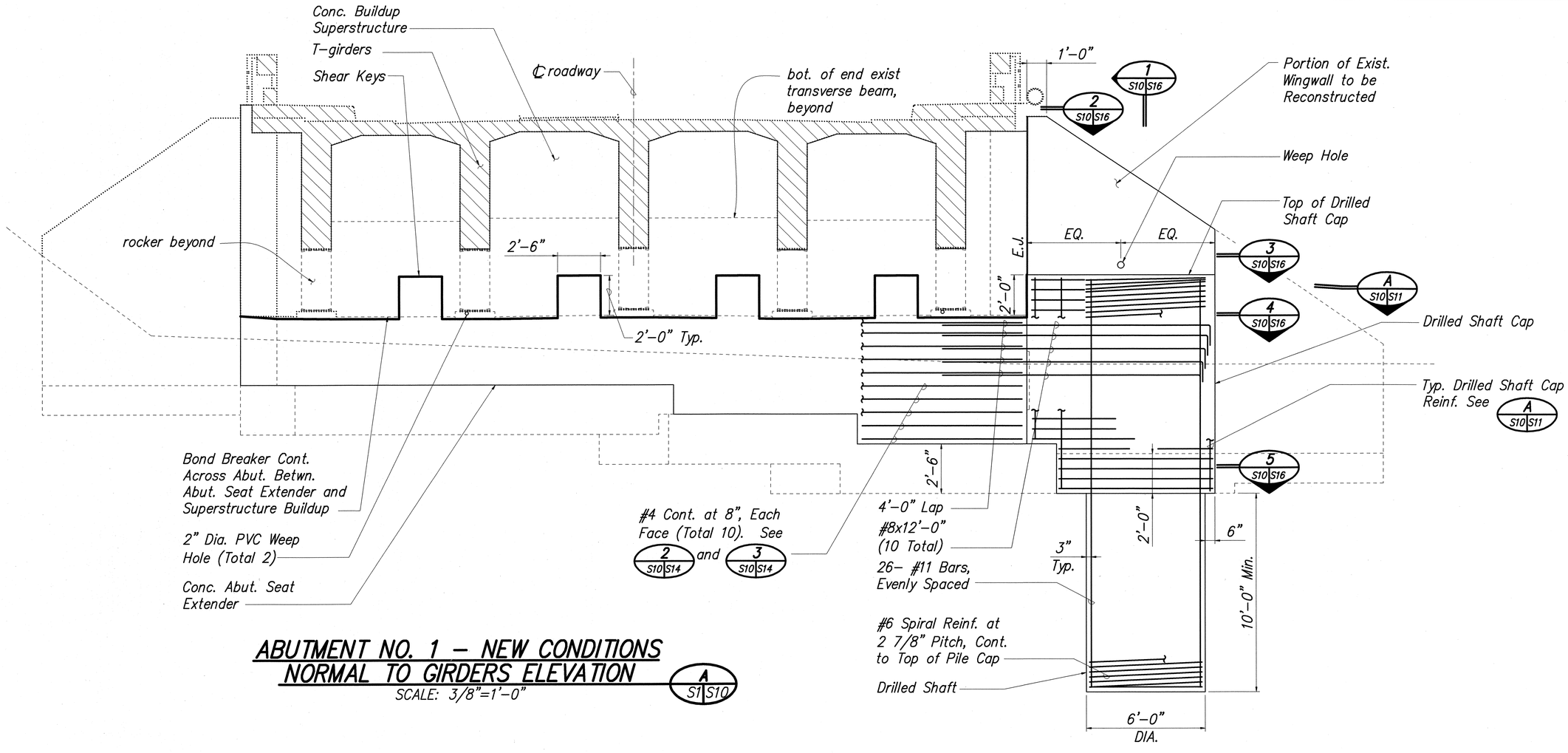

ABUTMENT NO. 1 – NEW CONDITIONS NORMAL TO GIRDERS ELEVATION

SCALE: 3/8"=1'-0"

A S1 S10

ORIGINAL PLAN | SURVEY PLOTTED BY | DRAWN BY | TRACED BY | DESIGNED BY | QUANTITIES BY | CHECKED BY | DATE | NOTE BOOK No.

I:\1997\9702000\DWGS\DETL\97020041.DWG 05/22/98 09:56 CEC

LEE T. TAKUSHI LICENSED PROFESSIONAL ENGINEER NO. 4767-S HAWAII USA

STATE OF HAWAII
DEPARTMENT OF TRANSPORTATION
HIGHWAYS DIVISION

MOANALULU BRIDGE
ABUTMENT NO. 1
NEW CONDITIONS ELEVATION

HAWAII BELT ROAD, SEISMIC RETROFIT OF VARIOUS BRIDGES, VICINITY OF LAUPAHOEHOE
FEDERAL AID PROJECT NO. BR-019-2(44)

SCALE: AS NOTED DATE: APRIL 1998

SHEET No. S10 OF 58 SHEETS

FED. ROAD DIST. NO.	STATE	FED. AID PROJ. NO.	FISCAL YEAR	SHEET NO.	TOTAL SHEETS
HAWAII	HAW.	BR-019-2(44)	1998	14	61

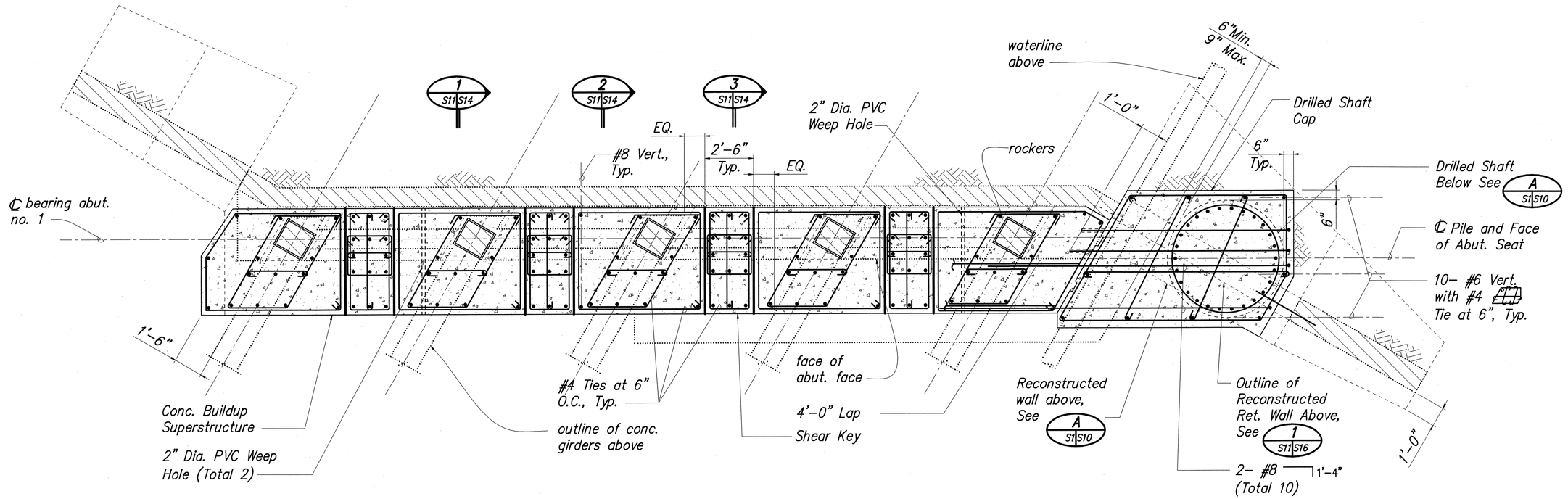

ABUTMENT NO. 1
NEW CONDITIONS SECTION PLAN A S10 S11

SCALE: 3/8" = 1'-0"

ORIGINAL PLAN	SURVEY PLOTTED BY	DATE
	DRAWN BY	"
	TRACED BY	"
NOTE BOOK	DESIGNED BY	"
	QUANTITIES BY	"
No.	CHECKED BY	"

I:\1997\9702000\DWGS\DETL\97020D42.DWG 05/26/98 08:20 DY

MAY 26 1998

LEE T. TAKUSHI LICENSED PROFESSIONAL ENGINEER NO. 4767-S HAWAII USA

STATE OF HAWAII
DEPARTMENT OF TRANSPORTATION
HIGHWAYS DIVISION

MOANALULU BRIDGE
ABUTMENT NO. 1
NEW CONDITIONS SECTION

HAWAII BELT ROAD, SEISMIC RETROFIT OF VARIOUS BRIDGES,
VICINITY OF LAUPAHOEHOE
FEDERAL AID PROJECT NO. BR-019-2(44)

SCALE: AS NOTED DATE: APRIL 1998

SHEET No. S11 OF 58 SHEETS

FED. ROAD DIST. NO.	STATE	FED. AID PROJ. NO.	FISCAL YEAR	SHEET NO.	TOTAL SHEETS
HAWAII	HAW.	BR-019-2(44)	1998	15	61

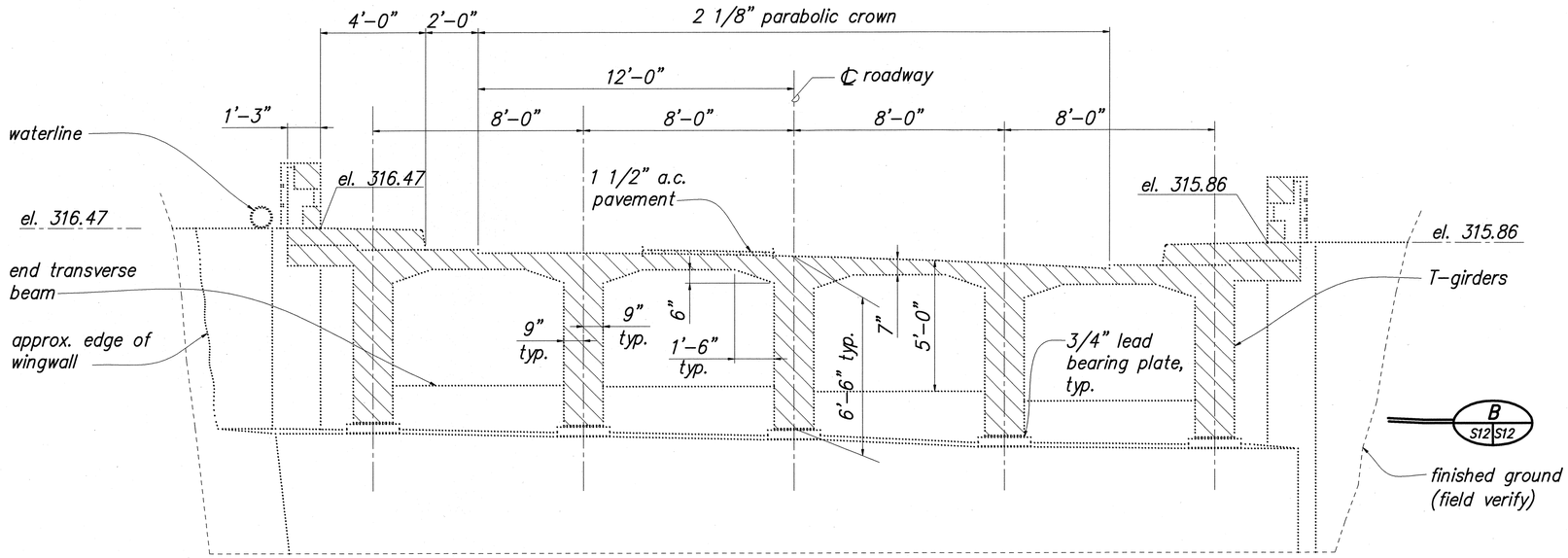

ABUTMENT NO. 2 – EXISTING CONDITIONS NORMAL TO GIRDER ELEVATION

SCALE: 3/8"=1'-0"

A S1 S12

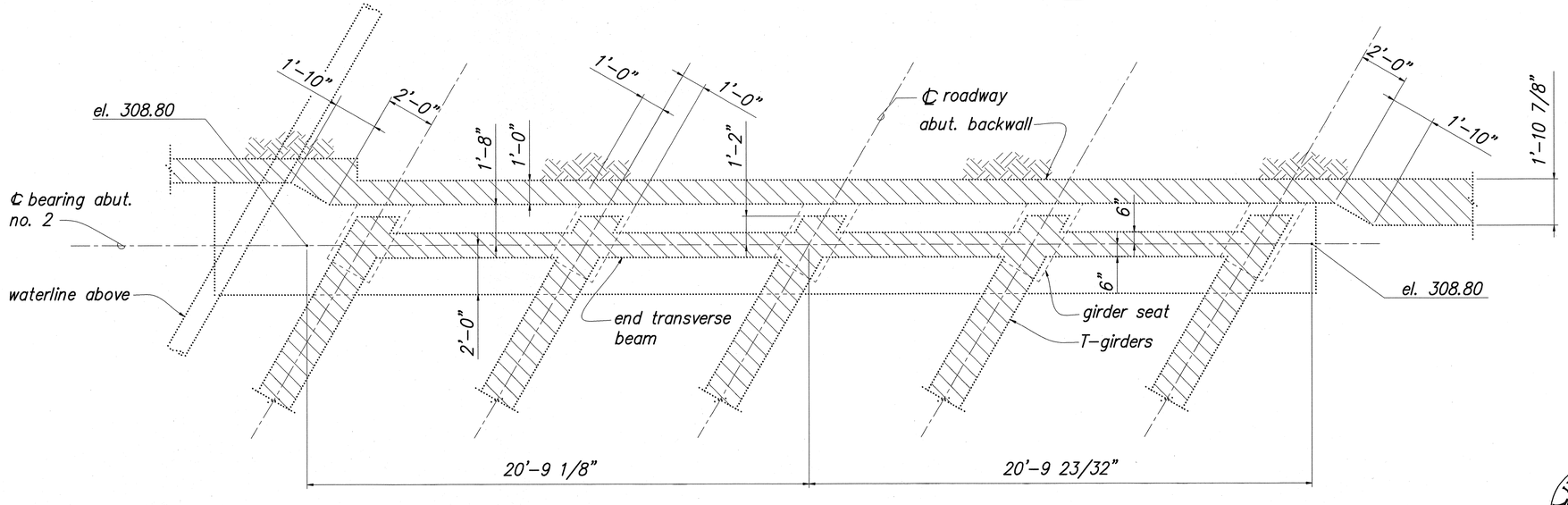

ABUTMENT NO. 2 EXISTING CONDITIONS SECTION PLAN

SCALE: 3/8"=1'-0"

B S12 S12

LEE T. TAKUSHI LICENSED PROFESSIONAL ENGINEER NO. 4767-S HAWAII USA

STATE OF HAWAII
DEPARTMENT OF TRANSPORTATION
HIGHWAYS DIVISION

MOANALULU BRIDGE
ABUTMENT NO. 2 - EXISTING CONDITIONS ELEVATION AND SECTION

HAWAII BELT ROAD, SEISMIC RETROFIT OF VARIOUS BRIDGES, VICINITY OF LAUPAHOEHOE
FEDERAL AID PROJECT NO. BR-019-2(44)

SCALE: AS NOTED DATE: APRIL 1998

SHEET No. S12 OF 58 SHEETS

ORIGINAL PLAN | SURVEY PLOTTED BY | DRAWN BY | TRACED BY | DESIGNED BY | QUANTITIES BY | CHECKED BY | DATE
NOTE BOOK No.

H:\1997\9702000\DWGS\DETL\97020023.DWG 05/22/98 10:20 CEC

FED. ROAD DIST. NO.	STATE	FED. AID PROJ. NO.	FISCAL YEAR	SHEET NO.	TOTAL SHEETS
HAWAII	HAW.	BR-019-2(44)	1998	16	61

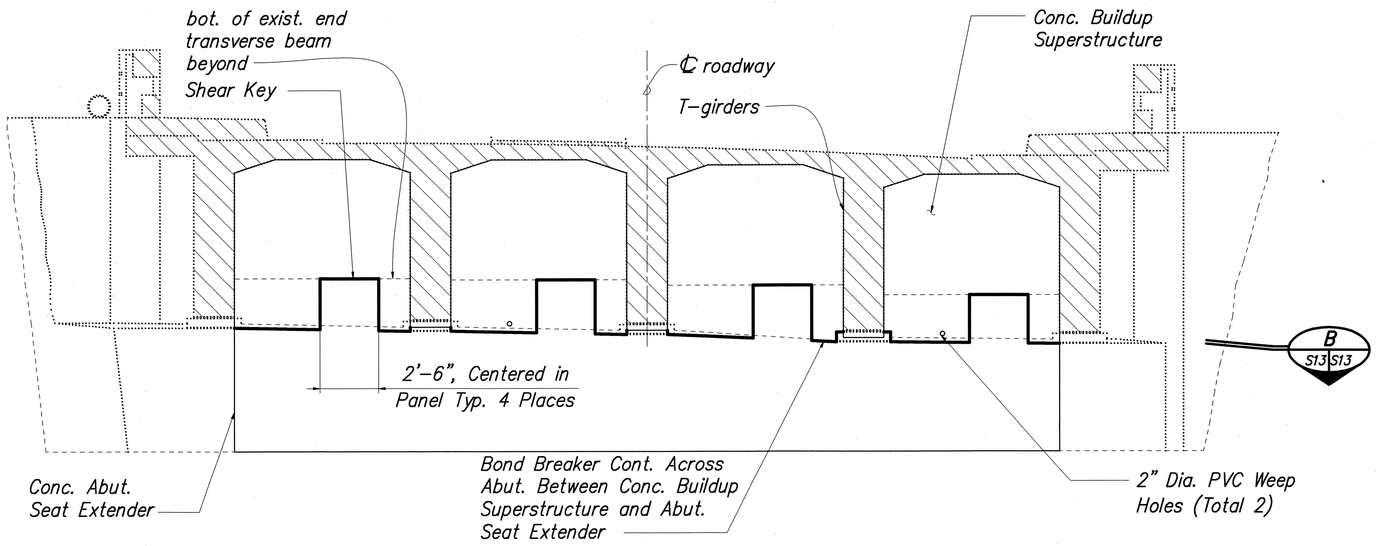

ABUTMENT NO. 2 – NEW CONDITIONS NORMAL TO GIRDERS ELEVATION

SCALE: 3/8"=1'-0"

A S1 S13

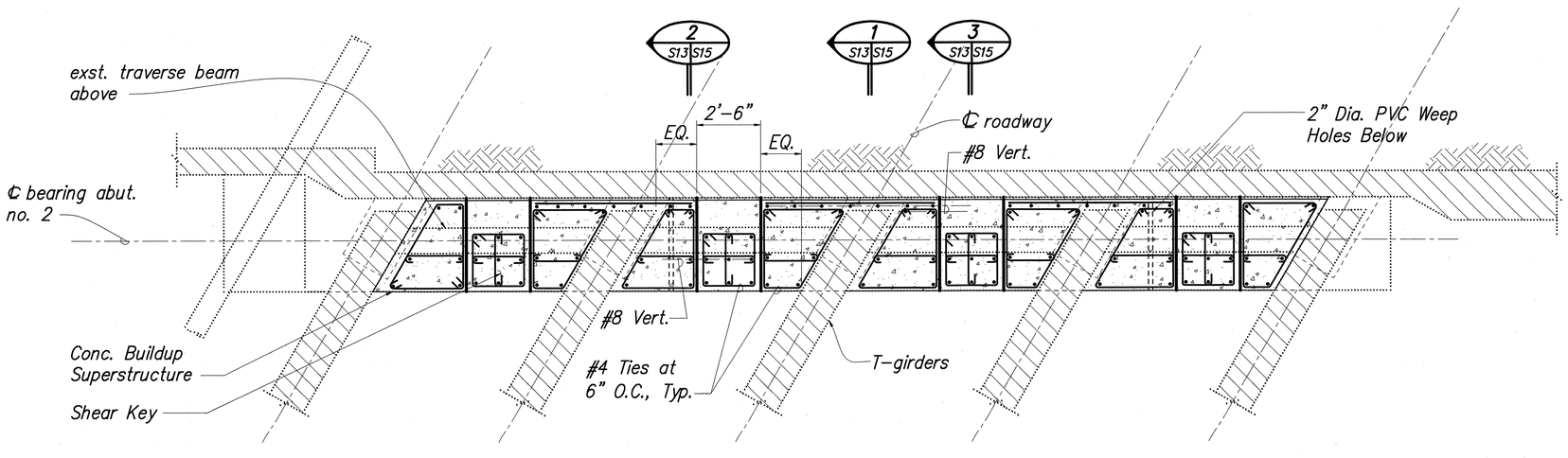

ABUTMENT NO. 2 NEW CONDITIONS SECTION PLAN

SCALE: 3/8"=1'-0"

B S13 S13

LEE T. TAKUSHI LICENSED PROFESSIONAL ENGINEER NO. 4767-S HAWAII USA

STATE OF HAWAII
DEPARTMENT OF TRANSPORTATION
HIGHWAYS DIVISION

MOANALULU BRIDGE
ABUTMENT NO. 2 - NEW CONDITIONS ELEVATION AND SECTION

HAWAII BELT ROAD, SEISMIC RETROFIT OF VARIOUS BRIDGES, VICINITY OF LAUPAHOEHOE
FEDERAL AID PROJECT NO. BR-019-2(44)

SCALE: AS NOTED DATE: APRIL 1998

SHEET No. S13 OF 58 SHEETS

16

ORIGINAL PLAN	SURVEY PLOTTED BY	DATE
	DRAWN BY	
	TRACED BY	
NOTE BOOK	DESIGNED BY	
	QUANTITIES BY	
No.	CHECKED BY	

DY 97\9702000\DWGS\DETL\9702043.DWG 05/26/98 08:22 DY

MAY 26 1998

FED. ROAD DIST. NO.	STATE	FED. AID PROJ. NO.	FISCAL YEAR	SHEET NO.	TOTAL SHEETS
HAWAII	HAW.	BR-019-2(44)	1998	17	61

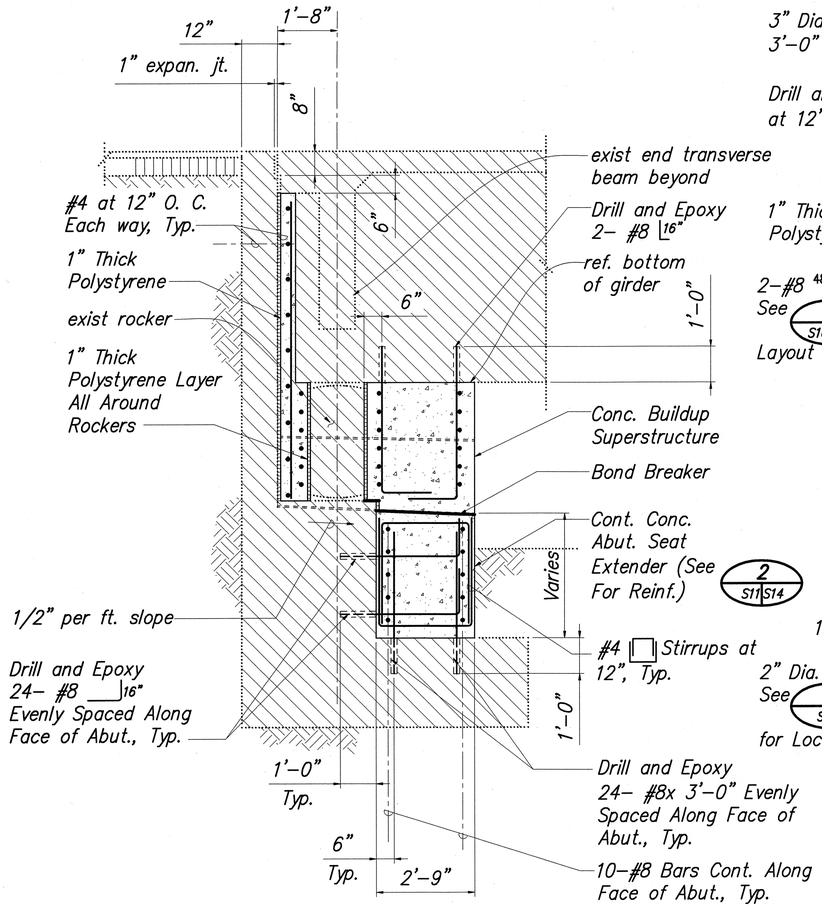

DETAIL 1 S11 S14
SCALE: 1/2"=1'-0"

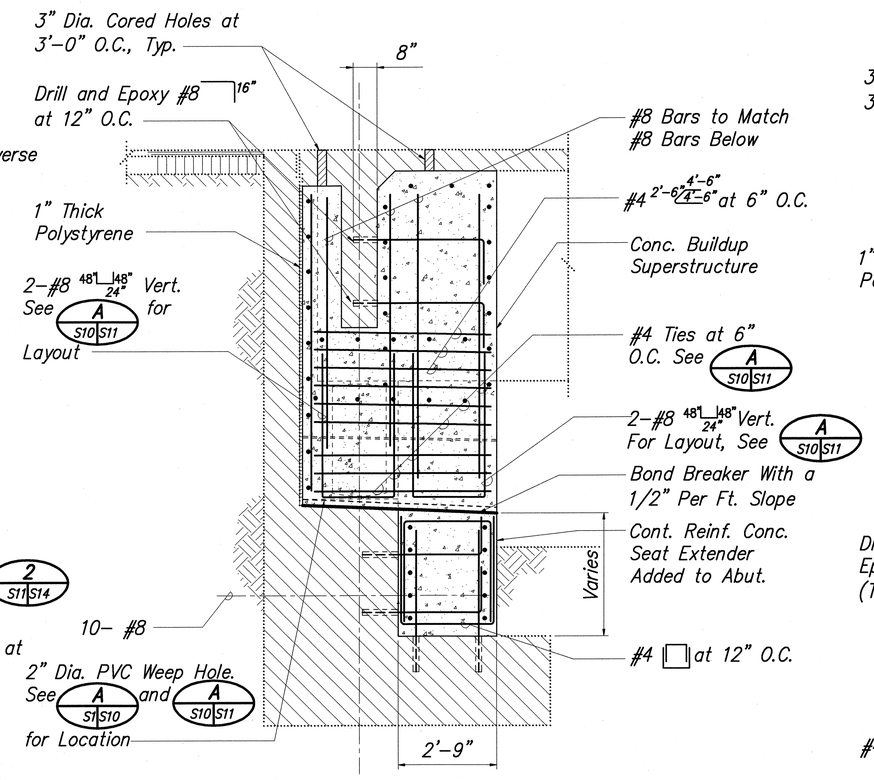

DETAIL 2 S14
SCALE: 1/2"=1'-0"
S10, S11, S14

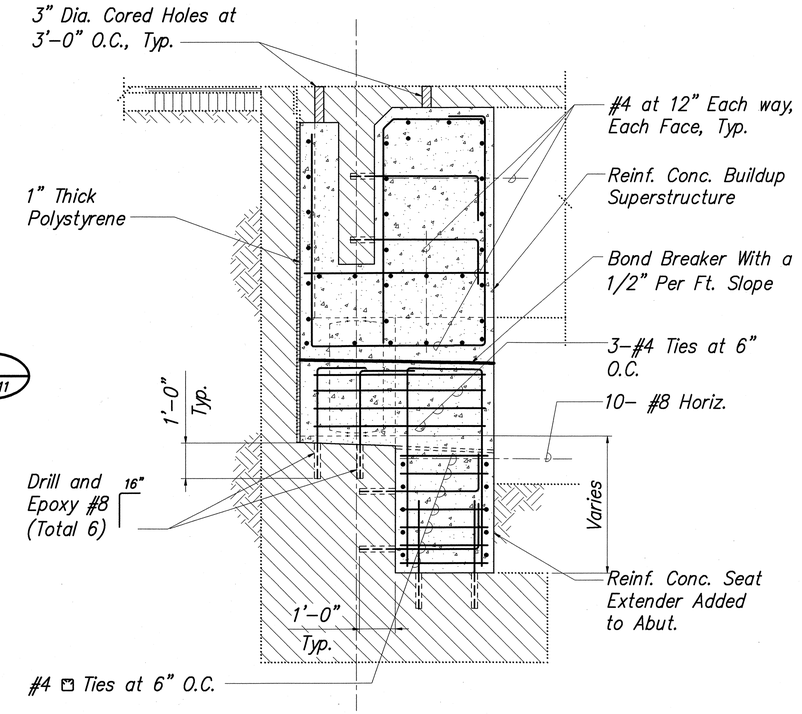

DETAIL 3 S14
SCALE: 1/2"=1'-0"
S10, S11

NOTES:

1. Items marked typical are applicable along that entire abutment.
2. Provide 40" min. lap splice length for all #8 bars this sheet.

LEE T. TAKUSHI LICENSED PROFESSIONAL ENGINEER NO. 4767-S HAWAII USA

STATE OF HAWAII
DEPARTMENT OF TRANSPORTATION
HIGHWAYS DIVISION

MOANALULU BRIDGE
ABUTMENT NO. 1
NEW CONDITIONS DETAILS

HAWAII BELT ROAD, SEISMIC RETROFIT OF VARIOUS BRIDGES, VICINITY OF LAUPAHOEHOE
FEDERAL AID PROJECT NO. BR-019-2(44)
SCALE: AS NOTED DATE: APRIL 1998

SHEET No. S14 OF 58 SHEETS

ORIGINAL PLAN | SURVEY PLOTTED BY | DRAWN BY | TRACED BY | DESIGNED BY | QUANTITIES BY | CHECKED BY | DATE
NOTE BOOK No.

J:\1997\9702000\DWGS\DETL\97020005.DWG 05/22/98 11:52 DY

MAY 28 1998

FED. ROAD DIST. NO.	STATE	FED. AID PROJ. NO.	FISCAL YEAR	SHEET NO.	TOTAL SHEETS
HAWAII	HAW.	BR-019-2(44)	1998	18	61

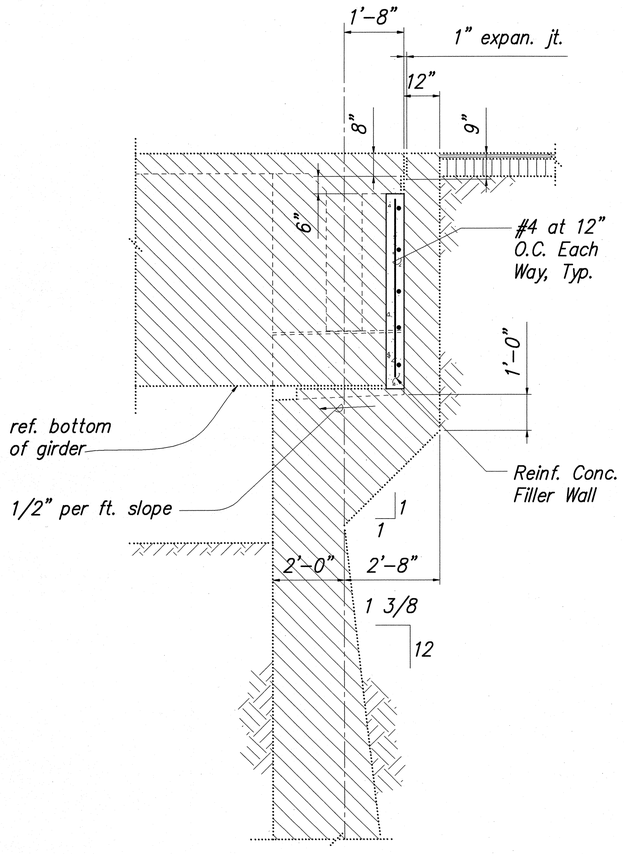

DETAIL 1 S13 S15
SCALE: 1/2"=1'-0"

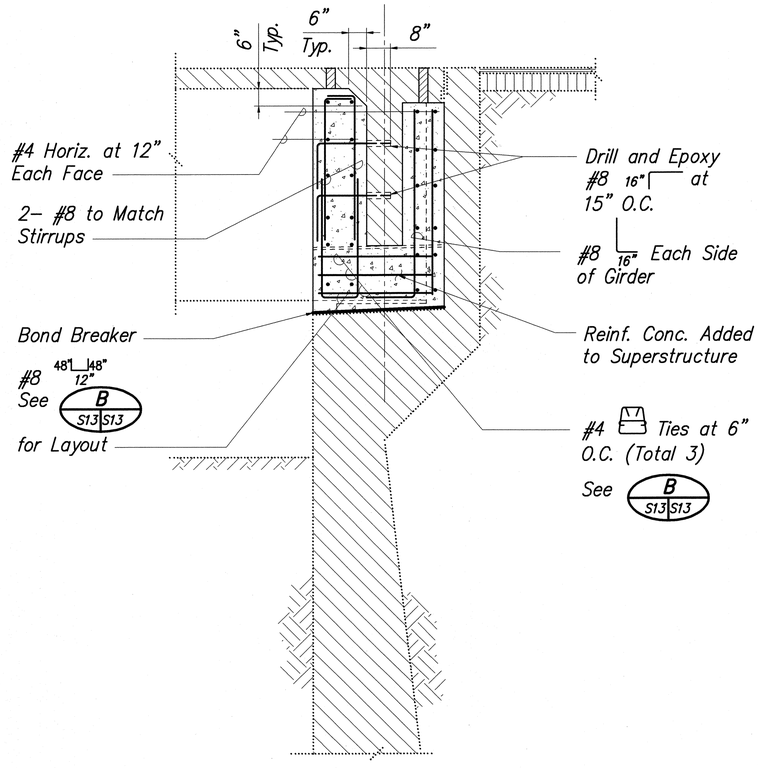

DETAIL 2 S13 S15
SCALE: 1/2"=1'-0"

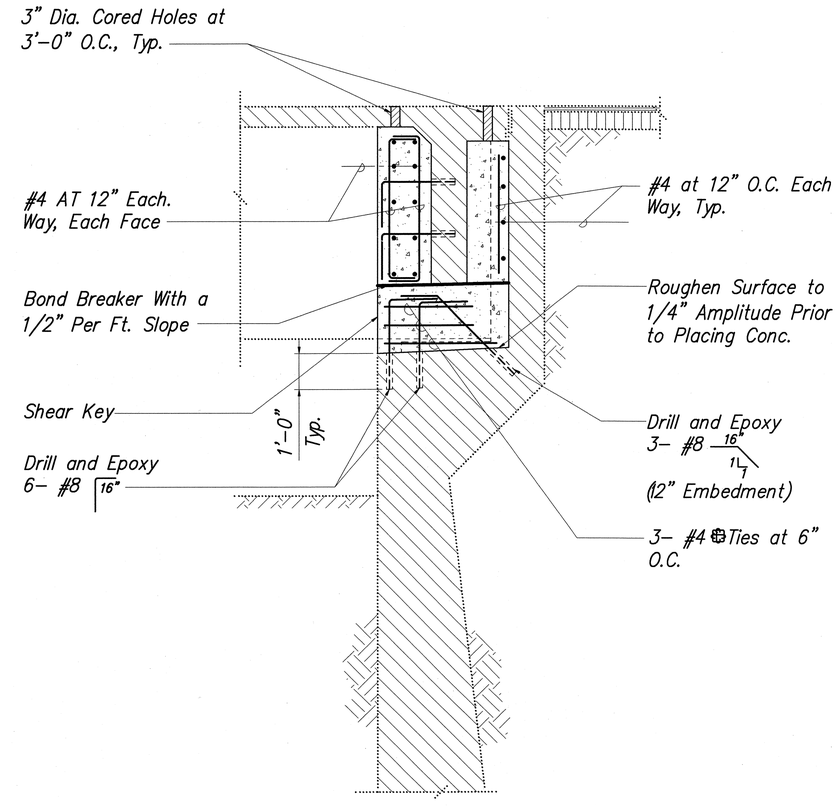

DETAIL 3 S13 S15
SCALE: 1/2"=1'-0"

LEE T. TAKUSHI LICENSED PROFESSIONAL ENGINEER NO. 4767-S HAWAII USA

STATE OF HAWAII
DEPARTMENT OF TRANSPORTATION
HIGHWAYS DIVISION

MOANALULU BRIDGE
ABUTMENT NO. 2
NEW CONDITIONS DETAILS

HAWAII BELT ROAD, SEISMIC RETROFIT OF VARIOUS BRIDGES,
VICINITY OF LAUPAHOEHOE
FEDERAL AID PROJECT NO. BR-019-2(44)

SCALE: AS NOTED DATE: APRIL 1998

SHEET No. S15 OF 58 SHEETS

ORIGINAL PLAN	SURVEY PLOTTED BY	DATE
	DRAWN BY	"
	TRACED BY	"
NOTE BOOK	DESIGNED BY	"
	QUANTITIES BY	"
No.	CHECKED BY	"

I:\1997\9702000\DWGS\DETL\9702024.DWG 05/22/98 11:54 DY

MAY 28 1998

FED. ROAD DIST. NO.	STATE	FED. AID PROJ. NO.	FISCAL YEAR	SHEET NO.	TOTAL SHEETS
HAWAII	HAW.	BR-019-2(44)	1998	19	61

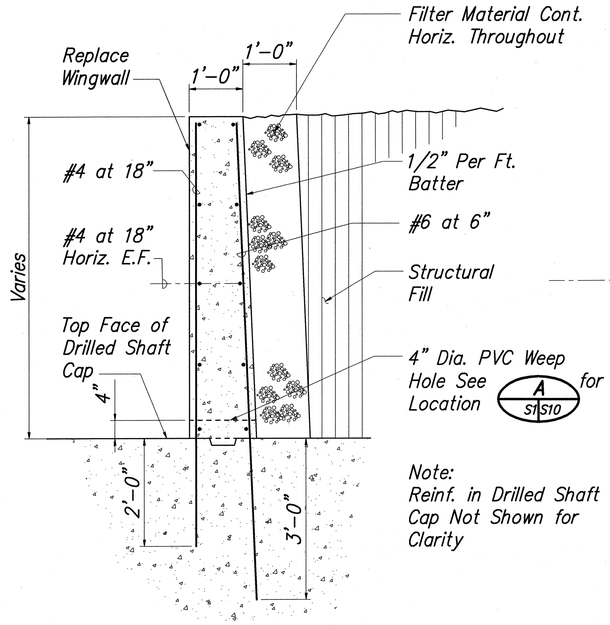

Note:
Reinf. in Drilled Shaft Cap Not Shown for Clarity

DETAIL 1 S10, S11 / S16
SCALE: 3/4"=1'-0"

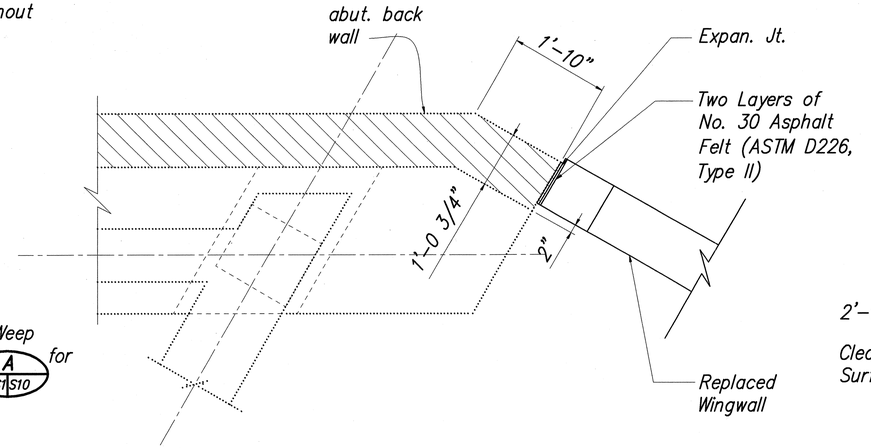

DETAIL 2 S10 S16
SCALE: 3/4"=1'-0"

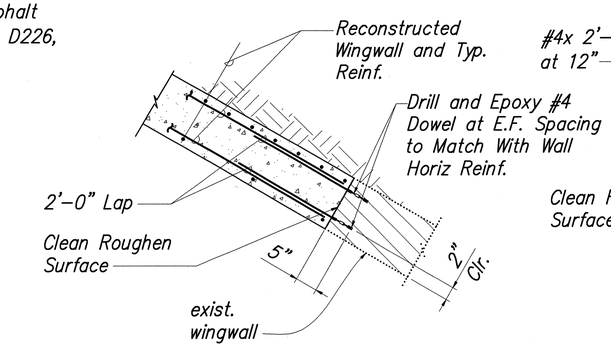

DETAIL 3 S10 S16
SCALE: 3/4"=1'-0"

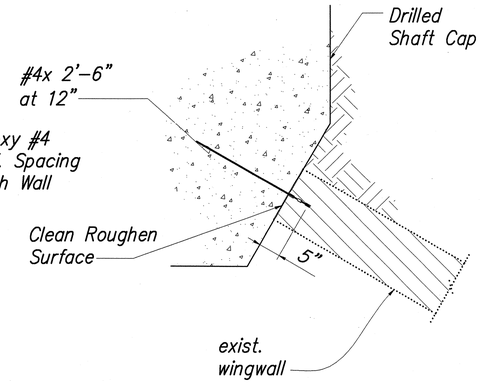

Note:
Reinf. in Drilled Shaft Cap Not Shown for Clarity

DETAIL 4 S10 S16
SCALE: 3/4"=1'-0"

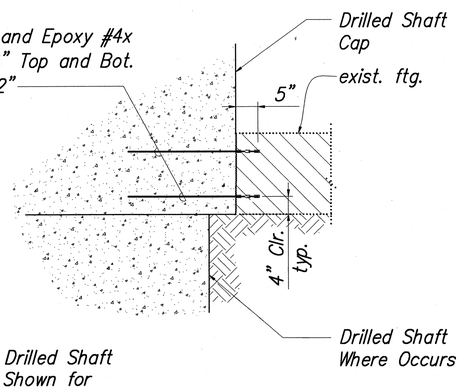

Note:
Reinf. in Drilled Shaft Cap Not Shown for Clarity

DETAIL 5 S10 S16
SCALE: 3/4"=1'-0"

LEE T. TAKUSHI LICENSED PROFESSIONAL ENGINEER NO. 4767-S HAWAII USA

STATE OF HAWAII
DEPARTMENT OF TRANSPORTATION
HIGHWAYS DIVISION

MOANALULU BRIDGE
RETAINING WALL SECTIONS AND DETAILS

HAWAII BELT ROAD, SEISMIC RETROFIT OF VARIOUS BRIDGES, VICINITY OF LAUPAHOEHOE
FEDERAL AID PROJECT NO. BR-019-2(44)

SCALE: AS NOTED DATE: APRIL 1998

SHEET No. S16 OF 58 SHEETS

ORIGINAL PLAN	SURVEY PLOTTED BY	DATE
	DRAWN BY	" " " "
	TRACED BY	" " " "
NOTE BOOK	DESIGNED BY	
	QUANTITIES BY	
No.	CHECKED BY	

I:\1997\9702000\DWGS\DETL\9702005S.DWG 05/22/98 11:55 DY

MAY 2 0 1998