FED. ROAD DIST. NO.	STATE	PROJ. NO.	FISCAL YEAR	SHEET NO.	TOTAL SHEETS
HAWAII	HAW.	19H-02-93	1994	10	10

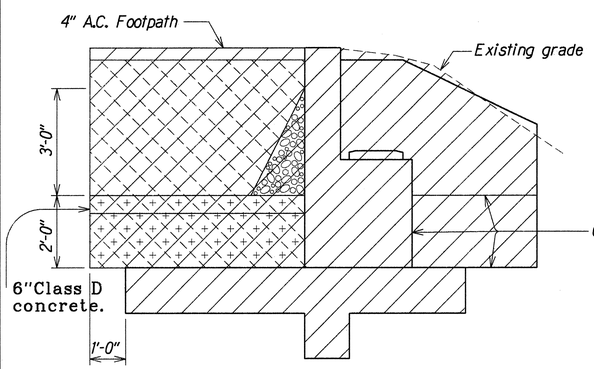

SIDE ELEVATION

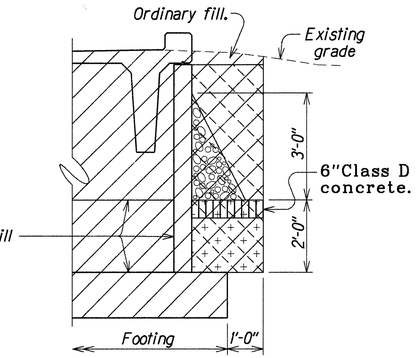

FRONT ELEVATION

Structure excavation pay limits.
Structure backfill pay limits.
Filter material
Impervious material

STRUCTURE EXCAVATION AND BACKFILL PAY LIMITS

Scale: ½"=1'-0"

PIPE RAIL NOTES:

1. Pipe shall be hot-dip galvanized steel pipe conforming to ASTM A 53 Grade B.
2. Repair of damage to pipe's galvanized coating shall be according to Hawaii Standard Spec. 501.03(G).
3. Holes for rail posts shall be filled with non-shrink grout.
4. Class D concrete footing shall be incidental to railing.

BACKFILL NOTE:

1. Filter and impervious materials shall be incidental to structure backfill.

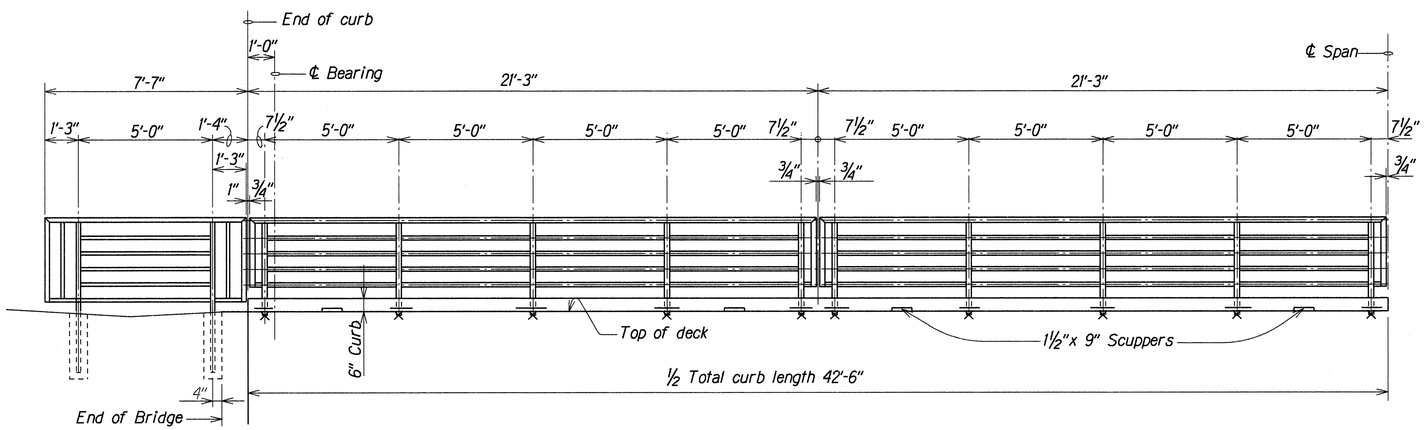

ELEVATION - PIPE RAILING

Scale: ⅜"=1'-0"

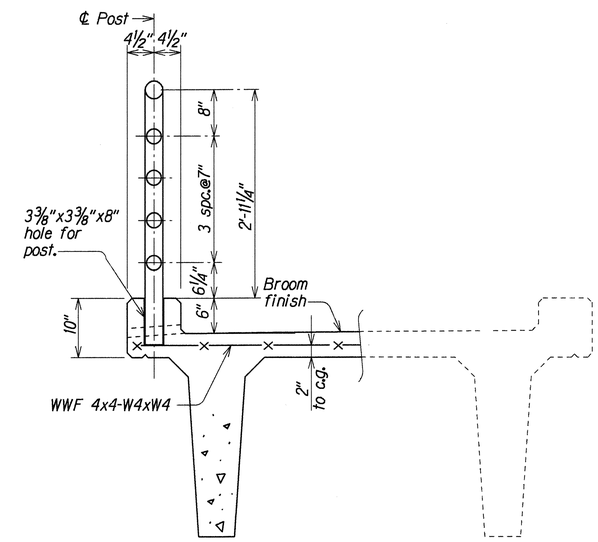

RAIL DETAIL

Scale: 1"=1'-0"

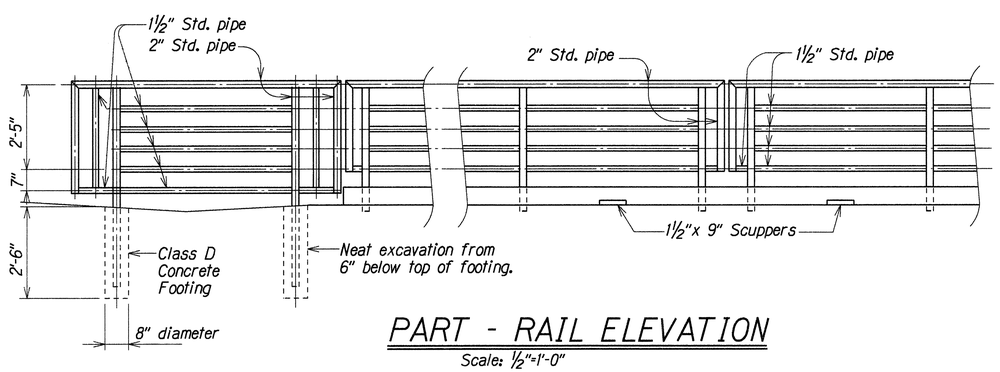

PART - RAIL ELEVATION

Scale: ½"=1'-0"

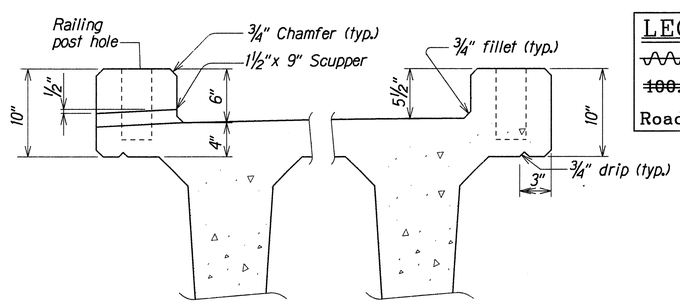

SCUPPER SECTION

Scale: 1½"=1'-0"

LEGEND FOR AS-BUILT POSTINGS	
∿∿∿	Squiggly line for as-built deletion
~~100.00~~	Double line for as-built deletion
Roadway	Text for as-built posting

STATE OF HAWAII
DEPARTMENT OF TRANSPORTATION
HIGHWAYS DIVISION

HAWAII BELT ROAD PEDESTRIAN BRIDGE AT WAIKOLU STREAM

STRUCTURE EXCAVATION AND BACKFILL PAY LIMITS
PIPE RAILING AND SCUPPER DETAILS

Project No. 19H-02-93

Scale: As Noted — Date: May, 1994

SHEET No. S6 OF 6 SHEETS

ORIGINAL PLAN	SURVEY PLOTTED BY CHO, LHW	DATE MAY 1994
	DRAWN BY	
	TRACED BY	
NOTE BOOK	DESIGNED BY SA	MAY 1994
4hbrdwnfr.dgn	QUANTITIES BY SA	MAY 1994
No.	CHECKED BY DOO, LA	MAY 1994

"AS-BUILT"