FED. ROAD DIST. NO.	STATE	PROJ. NO.	FISCAL YEAR	SHEET NO.	TOTAL SHEETS
HAWAII	HAW.	196-01-85	1986	12	25

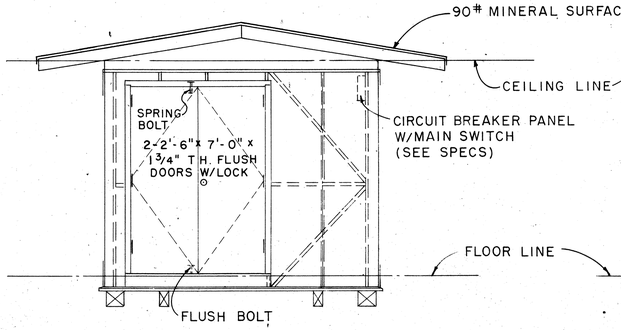

ELEVATION (B)

SCALE: 3/8" = 1'-0"

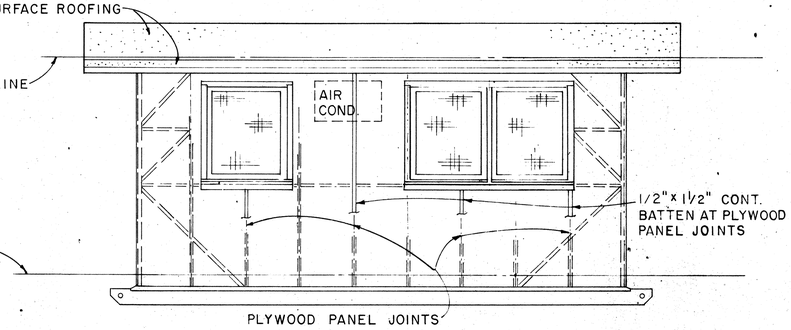

ELEVATION (A)

SCALE: 3/8" = 1'-0"

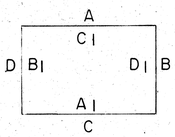

EXTERIOR & INTERIOR KEY

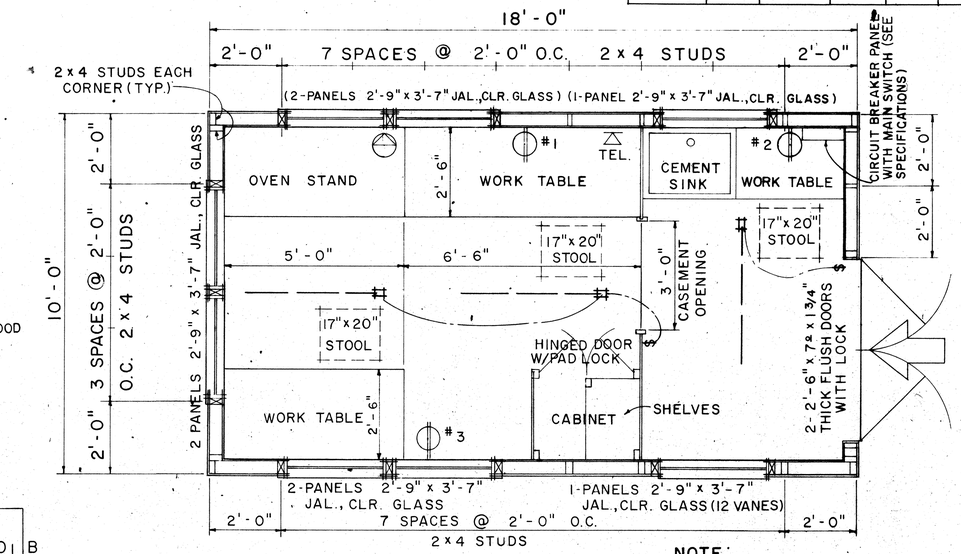

FLOOR PLAN

SCALE: 1/2" = 1'-0"

NOTE:

1. FLUORESCENT FIXTURE SHALL BE 48", 2 LAMP, 40 WATT, RAPID START.
2. TELEPHONE AND WALL OUTLET 4'-0" ABOVE FLOOR.

1-LAYER 30# ASPHALT FELT SHALL BE PLACED BETWEEN ROOFING AND SHEATHING.

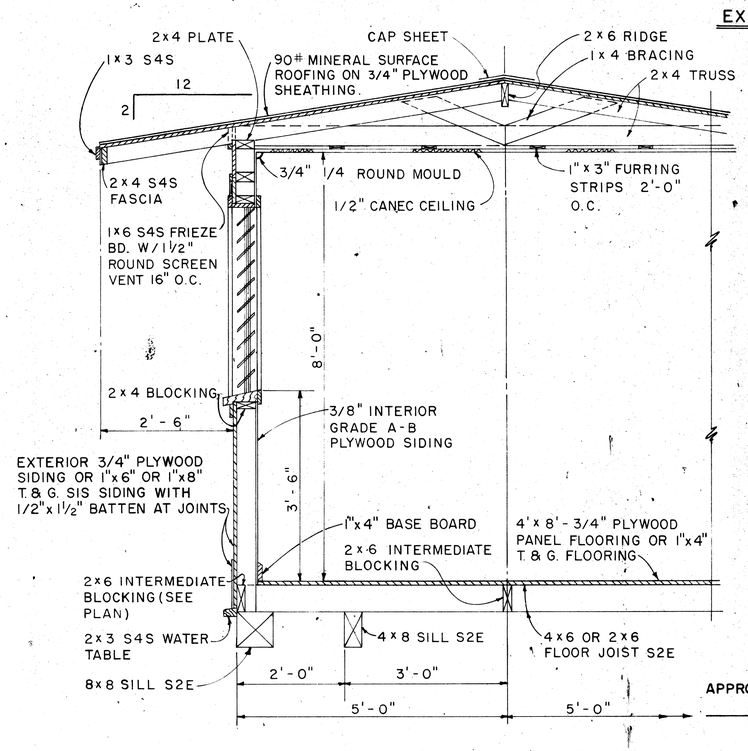

TYPICAL SECTION

SCALE: 3/4" = 1'-0"

NOTE:

ALL 3/4" PLYWOOD SHALL BE EXTERIOR GRADE A-C OR BETTER.

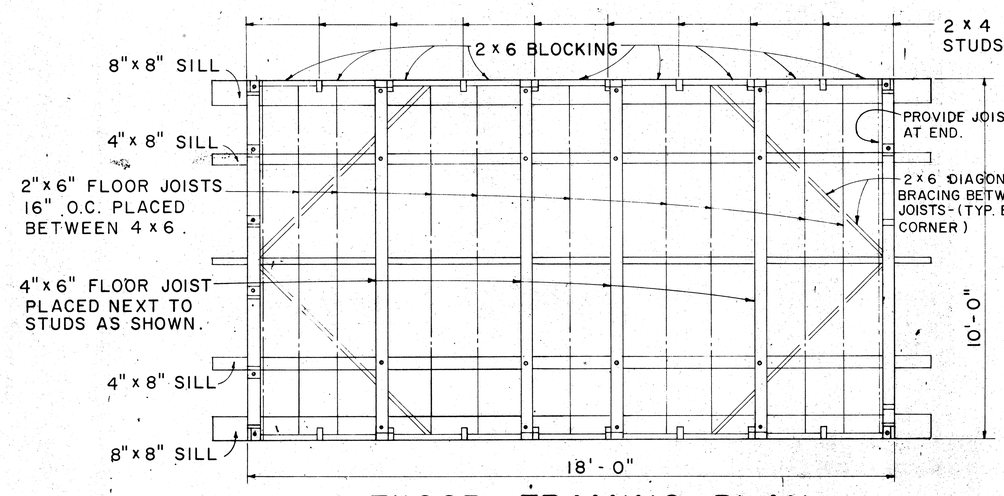

FLOOR FRAMING PLAN

SCALE: 1/2" = 1'-0"

APPROVAL RECOMMENDED:

HIGHWAY DESIGN ENGINEER — DATE 12-4-69

APPROVED:

ASSISTANT CHIEF, ENGINEERING — DATE 12-10-69

NO.	REVISION	APPROVED BY	DATE

STATE OF HAWAII
DEPARTMENT OF TRANSPORTATION
HIGHWAYS DIVISION

PROJECT SITE LABORATORY

Scale: As Noted

SHEET No. OF SHEETS | DD 636.3

12

ORIGINAL PLAN		DATE
	SURVEY PLOTTED BY	
	DRAWN BY	
	TRACED BY	
NOTE BOOK	DESIGNED BY	
	QUANTITIES BY	
No.	CHECKED BY	

FED. ROAD DIST. NO.	STATE	PROJ. NO.	FISCAL YEAR	SHEET NO.	TOTAL SHEETS
HAWAII	HAW.	19G-01-85	1986	13	25

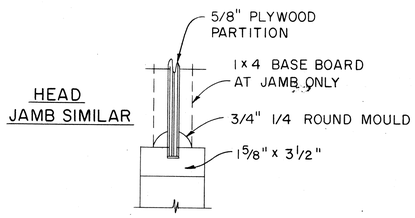

CASEMENT DETAIL

SCALE: 3" = 1'-0"

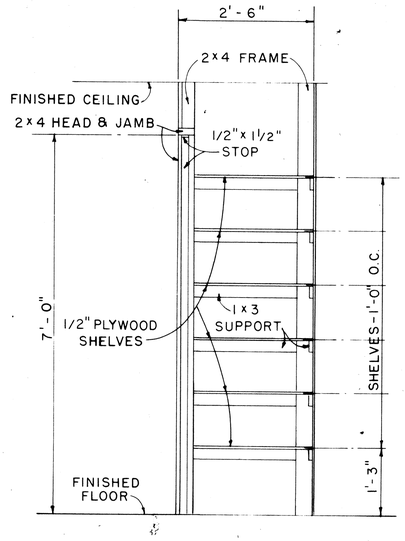

CABINET DETAIL

SCALE: 3/4" = 1'-0"

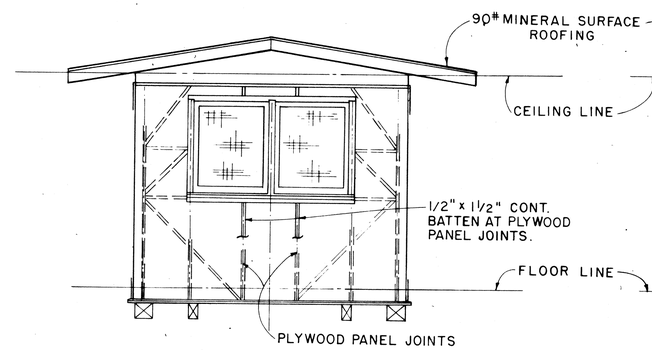

ELEVATION (D)

SCALE: 3/8" = 1'-0"

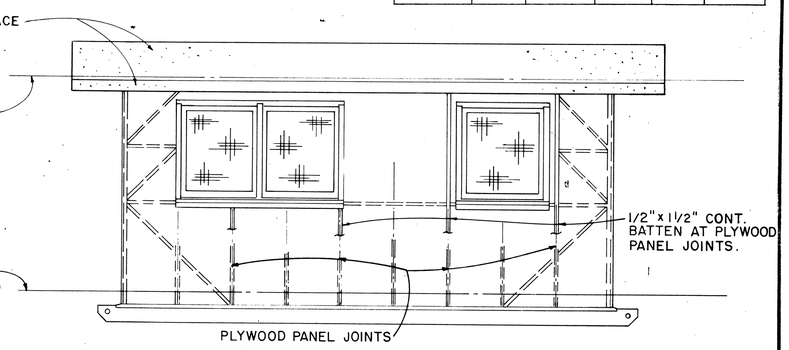

ELEVATION (C)

SCALE: 3/8" = 1'-0"

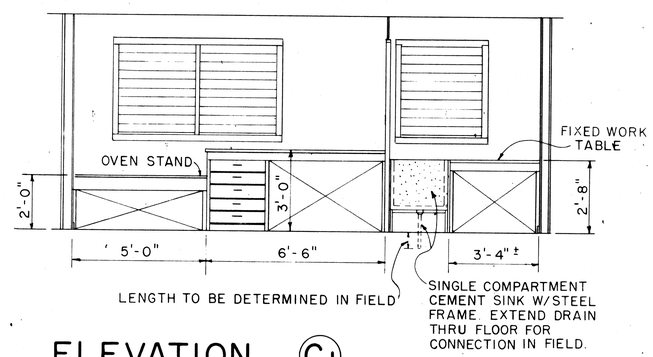

ELEVATION (C1)

SCALE: 3/8" = 1'-0"

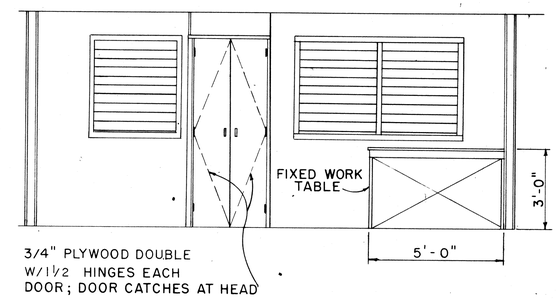

ELEVATION (A1)

SCALE: 3/8" = 1'-0"

APPROVAL RECOMMENDED:

HIGHWAY DESIGN ENGINEER — DATE: 12-4-69

APPROVED:

ASSISTANT CHIEF, ENGINEERING — DATE: 12-10-69

NO.	REVISION	APPROVED BY	DATE

STATE OF HAWAII
DEPARTMENT OF TRANSPORTATION
HIGHWAYS DIVISION

PROJECT SITE LABORATORY

Scale: As Noted

SHEET No. 13 OF SHEETS | DD 636.4

ORIGINAL PLAN	SURVEY PLOTTED BY	DATE
	DRAWN BY	"
	TRACED BY	"
NOTE BOOK	DESIGNED BY	"
	QUANTITIES BY	"
No.	CHECKED BY	"

FED. ROAD DIST. NO.	STATE	PROJ. NO.	FISCAL YEAR	SHEET NO.	TOTAL SHEETS
HAWAII	HAWAII	196-01-85	1986	14	25

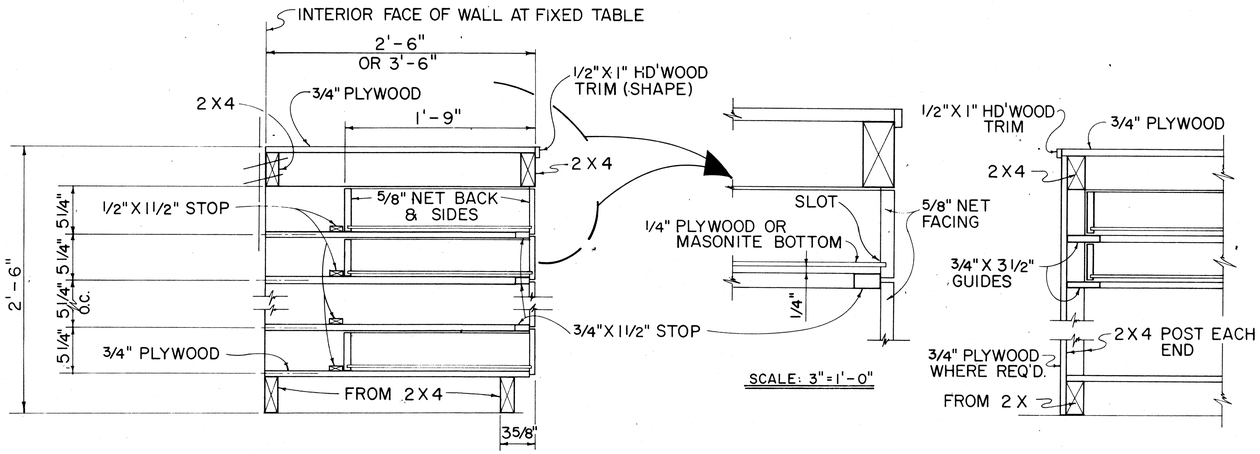

SCALE: 3"=1'-0"

CROSS SECTION
SCALE: 1 1/2"=1'-0"

END SECTION
SCALE: 1 1/2"=1'-0"

TYPICAL WORK TABLE DRAWER DETAIL

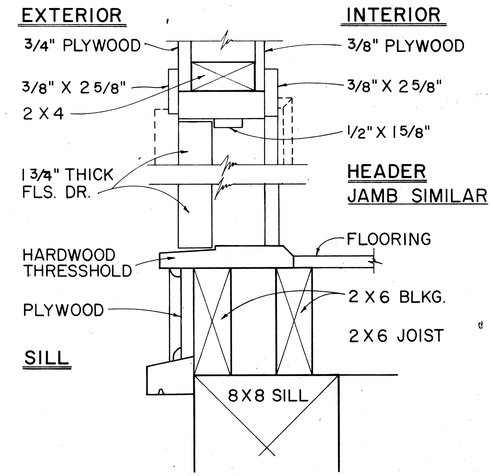

TYP. SWING OUT DOOR

TYPICAL SINGLE OR DOUBLE EXTERIOR DOOR DETAIL

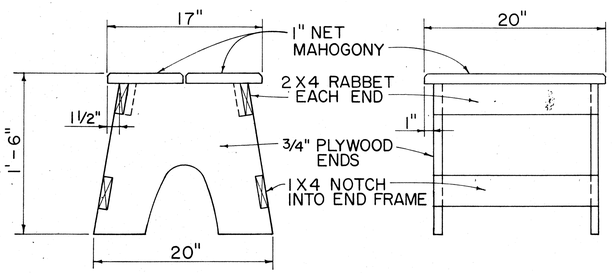

TYPICAL STOOL DETAIL

SCALE: 1 1/2"=1'-0"

NOTE: CONTRACTOR MAY WITH THE APPROVAL OF THE ENGINEER FURNISH THE FIELD OFFICE OR PROJECT SITE LABORATORY WITH STOOLS OTHER THAN THE TYPE SHOWN IN THE DETAIL.

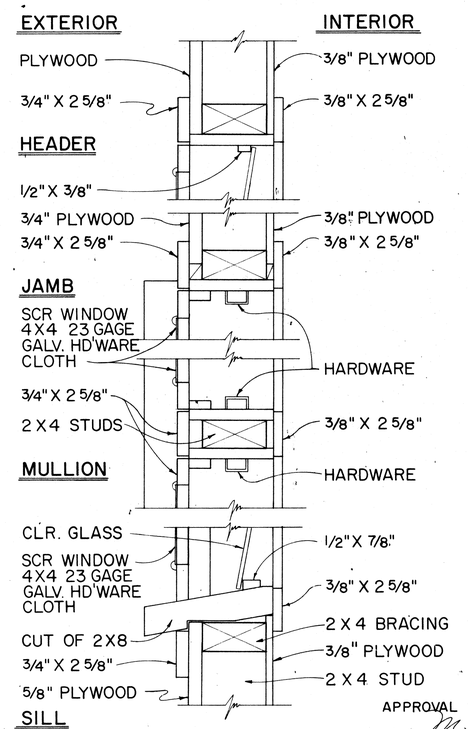

TYPICAL DETAIL JALOUSIES WINDOWS

SCALE: 3"=1'-0"

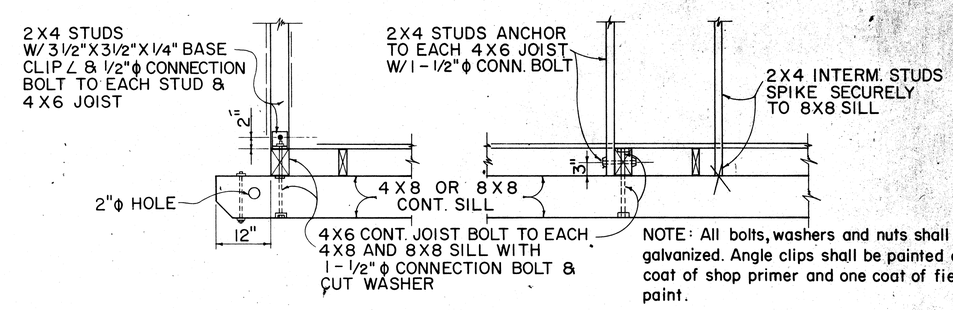

NOTE: All bolts, washers and nuts shall be galvanized. Angle clips shall be painted one coat of shop primer and one coat of field paint.

AT ENDS OF BLDG. ALONG SIDES OF BLDG.

TYPICAL 2X4 STUD & 4X6 FLOOR JOIST BASE CONNECTION DETAILS

APPROVAL RECOMMENDED:
M. Hirozawa — HIGHWAY DESIGN ENGINEER — 12-4-69 DATE

APPROVED:
Walter S. Dodd — ASSISTANT CHIEF, ENGINEERING — 12-10-69 DATE

NO.	REVISION	APPROVED BY	DATE

STATE OF HAWAII
DEPARTMENT OF TRANSPORTATION
HIGHWAYS DIVISION

FIELD, OFFICE & PROJECT SITE LABORATORY

Scale: As Noted

SHEET No. OF SHEETS DD 636.5

ORIGINAL PLAN — SURVEY PLOTTED BY / DRAWN BY / TRACED BY / DESIGNED BY / QUANTITIES BY / CHECKED BY — DATE — NOTE BOOK No.

FED. ROAD DIST. NO.	STATE	PROJ. NO.	FISCAL YEAR	SHEET NO.	TOTAL SHEETS
HAWAII	HAW.	19G-01-85	1986	15	25

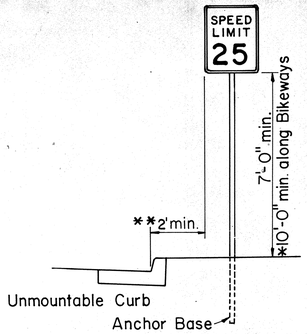

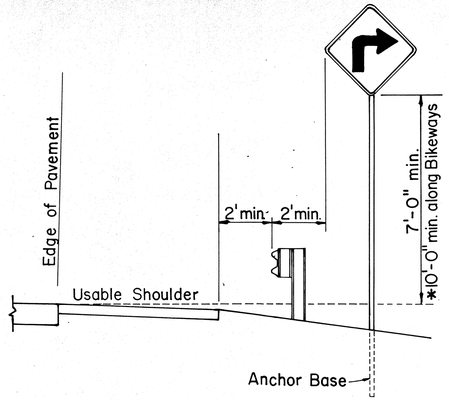

ROADSIDE ASSEMBLY
RURAL DISTRICT

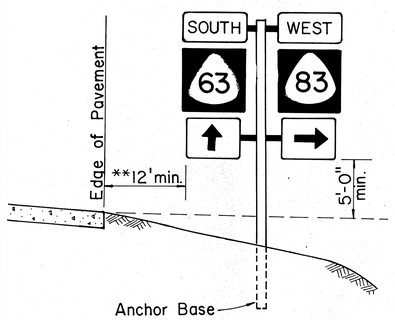

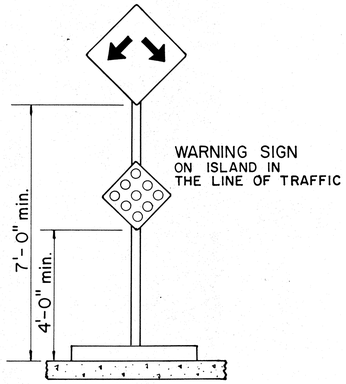

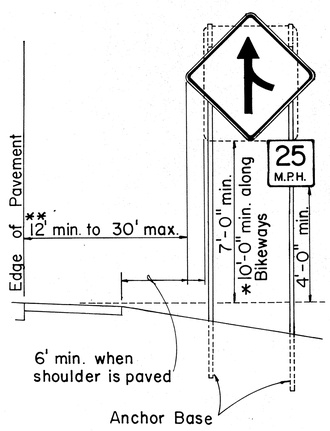

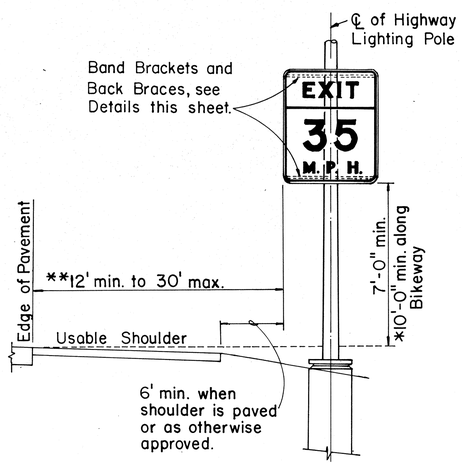

HEIGHT AND LATERAL LOCATION OF SIGNS
TYPICAL INSTALLATION

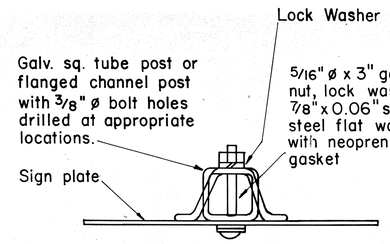

GALVANIZED SQUARE TUBE OR FLANGED CHANNEL POST

GENERAL NOTES

1. Signs shall be placed in conformance with positions shown and described in the "Manual on Uniform Traffic Control Devices for Streets and Highways", 1978, Part II, Section 2A-21, as amended, and as supplemented herein.
2. Sign 48" and wider or larger than 10 sq. ft. in area shall be mounted on two or more sign posts except as noted below.
3. Signs 48" and wider or larger than 10 sq. ft. in area may be mounted on objects other than sign posts (i.e. on highway lighting poles) as follows:
   a. Signs 48" and wider but less than 10 sq. ft. in area shall be mounted with a minimum of two sets of band bracket and back braces.
   b. Signs larger than 10 sq. ft. and less than 28 sq. ft. in area shall be mounted with a minimum of two sets of band brackets and back braces.
   c. Signs larger than 28 sq. ft. in area shall be mounted with a minimum of three sets of band bracket and back braces.
4. All parking restriction signs with arrows shall be mounted 45° to the line of traffic flow.
5. Sign posts shall extend 3 1/2" above each sign, where required, for attachment of City and County street name signs.
6. (R) or (L) indicates right or left and shown on the plans.

* 7. See plans for special details of signs along bikeways.

** 8. The minimum lateral distances shown are guidelines and shall be exceeded whenever possible. The Contractor shall place signs at the maximum practical lateral distance from the edge of the traveled way up to 30 feet and shall utilize protected locations whenever possible. Final locations of all signs shall be approved by the Engineer.

9. Signs in medians shall be placed at midpoint of median up to a maximum distance of 30 feet from the edge of traveled way. When appropriate, signs for opposing directions shall be placed back to back.
10. Anchor bases shall be installed for all signpost installations, unless otherwise shown or directed. See sheets DT 100A and DT 100B.

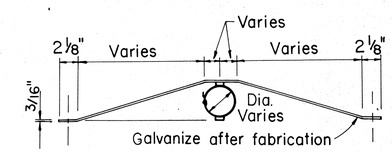

PLAN

Back braces shall be used in conjunction with band brackets

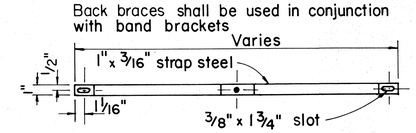

ELEVATION

BACK BRACE

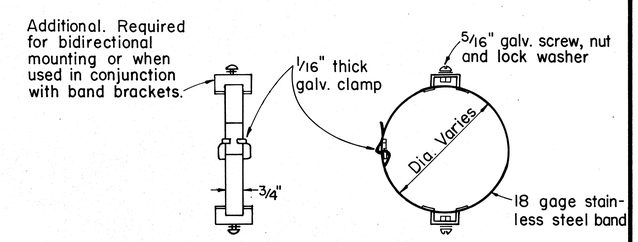

LEFT SIDE VIEW PLAN

BAND BRACKET

TYPICAL MOUNTING DETAILS

NO.	REVISION	APPROVED BY	DATE
1	Supercedes Sht. DT 100 approved 11/15/77		10-18-83

APPROVAL RECOMMENDED:
Eiichi Tanaka — 10/14/83
TRAFFIC ENGINEER — DATE

APPROVED:
[signature] — 10-18-83
ASSISTANT CHIEF, ENGINEERING — DATE

STATE OF HAWAII
DEPARTMENT OF TRANSPORTATION
HIGHWAYS DIVISION

STANDARD DETAILS

MISCELLANEOUS SIGN DETAILS

Not to Scale: Oct. 1983

SHEET NO. 15 OF SHEETS DT 100

ORIGINAL PLAN	SURVEY PLOTTED BY	DATE
	DRAWN BY	"
	TRACED BY	"
NOTE BOOK	DESIGNED BY	"
	QUANTITIES BY	"
No.	CHECKED BY	"

FED. ROAD DIST. NO.	STATE	PROJ. NO.	FISCAL YEAR	SHEET NO.	TOTAL SHEETS
HAWAII	HAW.	IDG-01-85	1986	16	25

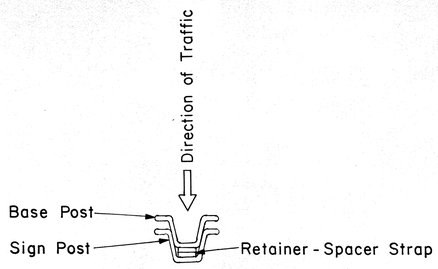

TOP VIEW

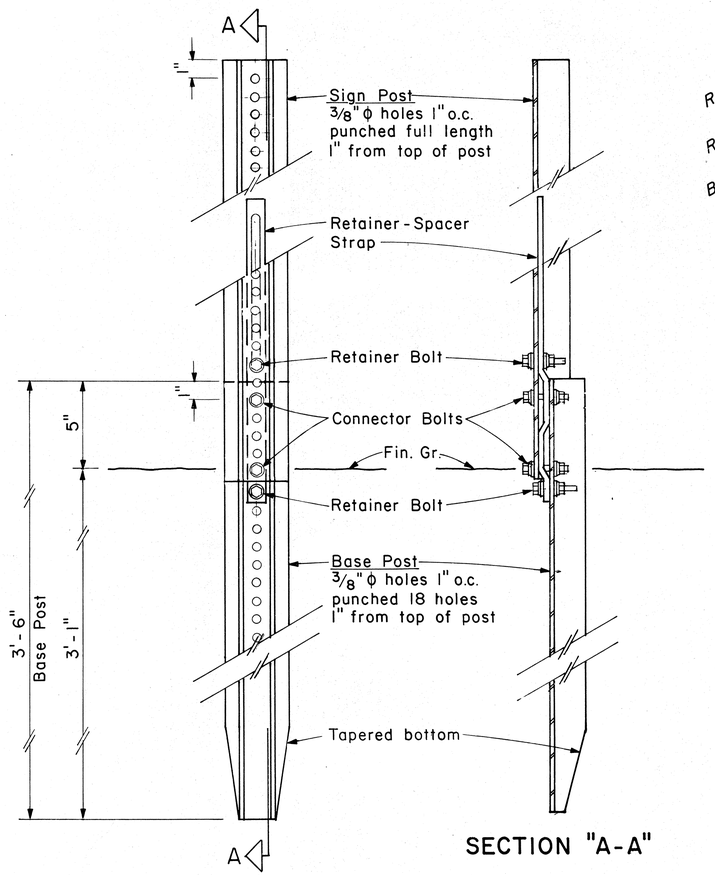

BACK VIEW

ANCHOR BASE DETAIL

Scale: 3" = 1' - 0"

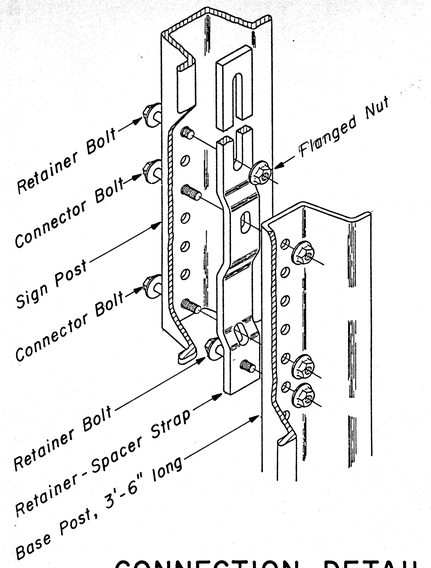

CONNECTION DETAIL

Not to Scale

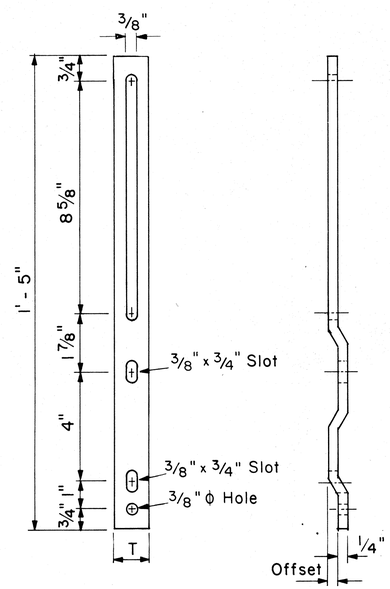

RETAINER-SPACER STRAP

Not to Scale

RETAINER-SPACER STRAP		
Post Size	T	Offset
2.50 lbs./ft.	1.00"	0.145"
4.00 lbs./ft.	1.12"	0.280"

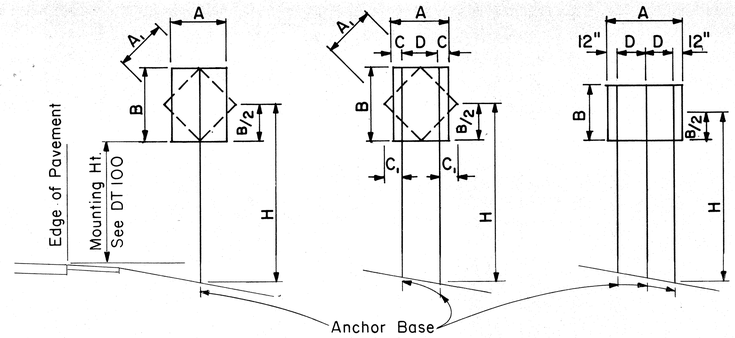

1 - POST
Sign area 10 sq. ft. and less

2 - POST
Sign area greater than 10 sq. ft. or A = 48" - 60"

3 - POST
A = greater than 60"

TYPICAL INSTALLATION

Not to Scale

A or A_1	C	C_1
36"	6"	–
48"	9"	19"
60"	12"	24"

NOTE: Frame stiffeners are required when D is greater than 24". See Gen. Note 4.

FLANGED CHANNEL: 1-POST INSTALLATION								
Post Size	A x B x H (Factor)	H = Ground Level to Midpoint (ft.)						A x B (Area, sq. ft.)
		7	8	9	10	11	12	
2.50 lbs./ft.	57	8.14	7.13	6.33	5.70	5.18	4.75	
4.00 lbs./ft.	112	–	–	–	–	–	9.33	

FLANGED CHANNEL: 2-POST INSTALLATION								
Post Size	A x B x H (Factor)	H = Ground Level to Midpoint (ft.)						A x B (Area, sq. ft.)
		7	8	9	10	11	12	
2.50 lbs./ft.	124	17.71	15.50	13.77	12.40	11.27	10.33	
4.00 lbs./ft.	241	34.43	30.13	26.78	24.10	21.91	20.08	

FLANGED CHANNEL: 3-POST INSTALLATION								
Post Size	A x B x H (Factor)	H = Ground Level to Midpoint (ft.)						A x B (Area, sq. ft.)
		7	8	9	10	11	12	
2.50 lbs./ft.	187	26.71	23.38	20.78	18.70	17.00	15.58	
4.00 lbs./ft.	362	51.71	45.25	40.22	36.20	32.91	30.17	

WINDLOAD CHARTS

GENERAL NOTES

1. Sign posts and base posts shall be flanged channel type structural steel conforming to ASTM A 499 and galvanized in accordance with ASTM A 123.
   NOMINAL DIMENSIONS :
   2.50 lbs./ft. - 3.125" x 1.562"
   4.00 lbs./ft. - 3.500" x 1.750"
2. Retainer - Spacer Strap shall be AISI 1020 steel and galvanized in accordance with ASTM A 123.
3. Retainer and Connector Bolts shall be 5/16 - 18 UNC x 1.75" long hex. head, integral flange conforming to ASTM A 354 Grade BC. Nuts shall be 5/16 - 18 UNC hex. head, integral flange conforming to ASTM A 563 Grade D. All bolts and nuts shall be cadmium plated per Federal spec. QQP 416 B, Class 2, Type 2.
4. All accessories, fittings and stiffener details (as required) shall be submitted to Engineer for approval 20 days prior to installation.
5. For additional details see sht. DT 100.
6. Basic formulas for use with the windload charts:
   Factor = A x B x H
   Therefore, if sign area (A x B) is known,
   $$\text{Maximum } H = \frac{\text{Factor}}{\text{sign area } (A \times B)}$$
   and if H is known,
   $$\text{Maximum sign area } (A \times B) = \frac{\text{Factor}}{H}$$

APPROVAL RECOMMENDED:

Eichi Tanaka — 9/21/82
TRAFFIC ENGINEER — DATE

APPROVED:

[illegible] — 9/22/82
ASSISTANT CHIEF, ENGINEERING — DATE

NO.	REVISION	APPROVED BY	DATE

STATE OF HAWAII
DEPARTMENT OF TRANSPORTATION
HIGHWAYS DIVISION

STANDARD DETAILS

GALVANIZED FLANGED CHANNEL SIGN POST MOUNTING

Scale: As Shown — Date: Sept. 1982

SHEET No. OF SHEETS DT100A

ORIGINAL PLAN	SURVEY PLOTTED BY	DATE
	DRAWN BY	
	TRACED BY	
NOTE BOOK	DESIGNED BY	
	QUANTITIES BY	
No.	CHECKED BY	

FED. ROAD DIST. NO.	STATE	PROJ. NO.	FISCAL YEAR	SHEET NO.	TOTAL SHEETS
HAWAII	HAW.	IDG-01-85	1986	17	25

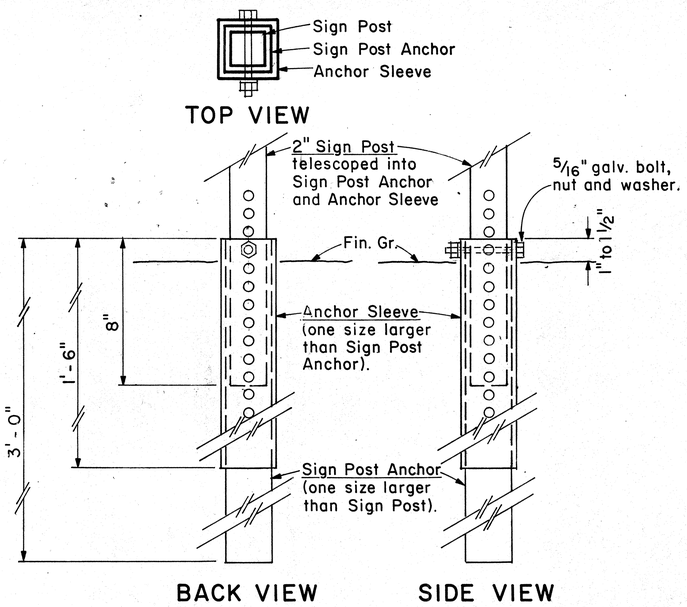

2" SIGN POST INSTALLATION

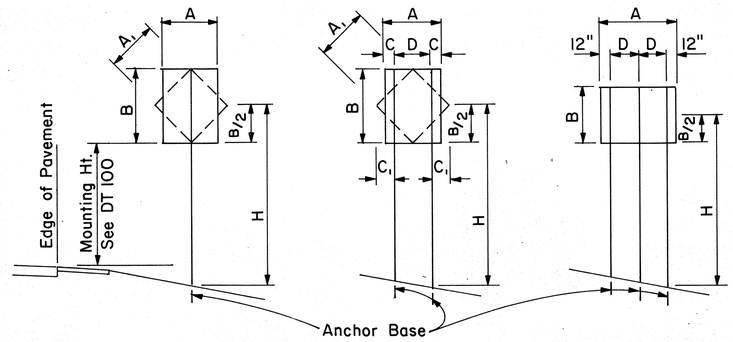

1-POST — Sign area 10 sq. ft. and less

2-POST — Sign area greater than 10 sq. ft. or A = 48"-60"

3-POST — A = greater than 60"

A or A_1	C	C_1
36"	6"	-
48"	9"	19"
60"	12"	24"

NOTE: Frame stiffeners are required when D is greater than 24". See Gen. Note 2.

TYPICAL INSTALLATION

Not to Scale

SQUARE TUBE: 1-POST INSTALLATION								
Post Size	A x B x H (Factor)	H = Ground Level to Midpoint (ft.)						A x B (Area, sq. ft.)
		7	8	9	10	11	12	
2"	62	8.8	7.7	6.8	6.1	5.6	4.8	
2 1/2"	107	-	-	-	-	9.6	8.8	

SQUARE TUBE: 2-POST INSTALLATION								
Post Size	A x B x H (Factor)	H = Ground Level to Midpoint (ft.)						A x B (Area, sq. ft.)
		7	8	9	10	11	12	
2"	122	17.4	15.2	13.5	12.2	11.0	10.1	
2 1/2"	212	30.2	26.5	23.5	21.1	19.2	17.6	
2 1/2", 10 ga.	260	37.0	32.0	28.6	26.0	23.5	21.5	

SQUARE TUBE: 3-POST INSTALLATION								
Post Size	A x B x H (Factor)	H = Ground Level to Midpoint (ft.)						A x B (Area, sq. ft.)
		7	8	9	10	11	12	
2"	183	26.0	22.8	20.3	18.2	16.6	15.2	
2 1/2"	318	45.4	39.5	35.2	31.5	28.8	26.5	
2 1/2", 10 ga.	388	55.0	48.5	43.0	38.5	35.0	32.0	

WINDLOAD CHARTS

GENERAL NOTES

1. Square tube sign posts shall conform to Subsection 713.11(C) Square Tube Posts of the Specifications.
2. All accessories, fittings and stiffener details (as required) shall be submitted to Engineer for approval 20 days prior to installation.
3. Square tube posts shall be perforated with 7/16" ϕ holes, 1" o.c., 4 sides, along entire length of post.
4. All posts shall be 12 gage unless otherwise specified or shown on the plans.
5. For additional details see sht. DT 100.
6. Basic formulas for use with the windload charts:
   Factor = A x B x H
   Therefore, if sign area (A x B) is known,
   $$\text{Maximum } H = \frac{\text{Factor}}{\text{sign area}(A \times B)}$$
   and if H is known,
   $$\text{Maximum sign area}(A \times B) = \frac{\text{Factor}}{H}$$

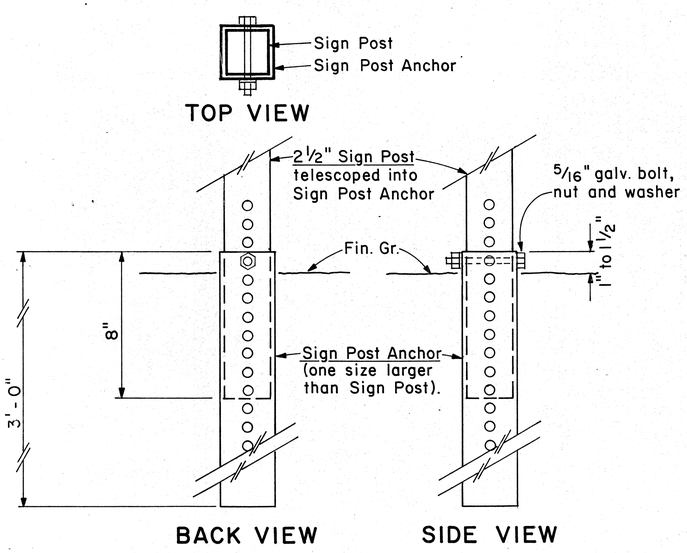

2 1/2" SIGN POST INSTALLATION

ANCHOR BASE DETAIL

Scale: 3" = 1'-0"

APPROVAL RECOMMENDED:

Eiichi Tanaka — 9/21/82
TRAFFIC ENGINEER — DATE

APPROVED:

Herbert Takishita — 9/22/82
ASSISTANT CHIEF, ENGINEERING — DATE

NO.	REVISION	APPROVED BY	DATE

STATE OF HAWAII
DEPARTMENT OF TRANSPORTATION
HIGHWAYS DIVISION

STANDARD DETAILS

GALVANIZED SQUARE TUBE SIGN POST MOUNTING

Scale: As Shown — Date: Sep. 1982

SHEET No. OF SHEETS DT100B

ORIGINAL PLAN	SURVEY PLOTTED BY	DATE
	DRAWN BY	"
	TRACED BY	"
NOTE BOOK	DESIGNED BY	"
	QUANTITIES BY	"
No.	CHECKED BY	"

FED. ROAD DIST. NO.	STATE	FED. AID PROJ. NO.	FISCAL YEAR	SHEET NO.	TOTAL SHEETS
HAWAII	HAW.	19G-01-85	1986	18	25

CW20-1a 48"x48"

CW20-2d 48"x48"

CW20-3b 48"x48"

CW20-4d 48"x48"

CW20-5d(L) 48"x48"

CW20-7c 36"x36"
24"x18"
CW20-7c-A 48"x48"
24"x18"

CW21-1 30"x30"

CW21-2 30"x30"

CW21-3 36"x36"

CW21-4 36"x36"

CW21-5 30"x30"

CW21-6 30"x30"

CW22-1b 48"x48"

CW22-2 42"x36"

CW22-3 42"x36"

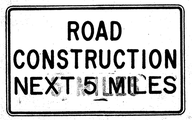

CG20-1(5) 60"x36"

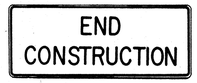

CG20-2 60"x24"

CM4-9(R) 30"x24"

CM4-10(R) 48"x18"

CG20-4 36"x18"

CW23-1 36"x36"

CW23-2b 48"x48"

CW23-3(R) 48"x48"

GENERAL NOTES

1. Sign details shall conform to the latest editions of FHWA publications "Manual on Uniform Traffic Control Devices for Streets and Highways," "Standard Alphabets for Highway Signs," and "Standard Highway Signs," and as amended.
2. All construction signs shall be reflectorized.
3. All construction signs shall have 3/8" bolt holes drilled at appropriate locations.
4. Numerals in ( ) indicates numerals to be inserted for sign message. (R) or (L) indicates right or left.
5. For "CW" series signs, suffixes a,b,c and d are as follows: a-1500 FT, b-1000 FT, c-500 FT and d-AHEAD.

APPROVAL RECOMMENDED:
Eichi Tanaka 3/21/72
TRAFFIC ENGINEER DATE

APPROVED:
Walter Baldridge 3/23/72
ASSISTANT CHIEF, ENGINEERING DATE

NO.	REVISION	APPROVED BY	DATE
1	Supersedes Sht. DT 104 Approved 12-30-69	H.T.	3/23/72
2	Revised General Note 1	H.T.	10/16/74
3	Revised General Note 2	HT	9-16-75
4	Revised General Note 2 and sign CG20-1(5)	H.T.	9-14-76
5	Revised General Note 1 and sign CW20-7c	E.T.	9/18/85

STATE OF HAWAII
DEPARTMENT OF TRANSPORTATION
HIGHWAYS DIVISION

STANDARD DETAILS

CONSTRUCTION SIGNS

NOT TO SCALE

SHEET No. OF SHEETS DT 104

18

ORIGINAL PLAN
NOTE BOOK No.
SURVEY PLOTTED BY
DRAWN BY
TRACED BY
DESIGNED BY
QUANTITIES BY
CHECKED BY
DATE

FED. ROAD DIST. NO.	STATE	FED. AID PROJ. NO.	FISCAL YEAR	SHEET NO.	TOTAL SHEETS
HAWAII	HAW.	19G-01-85	1986	19	25

TWO - LANE

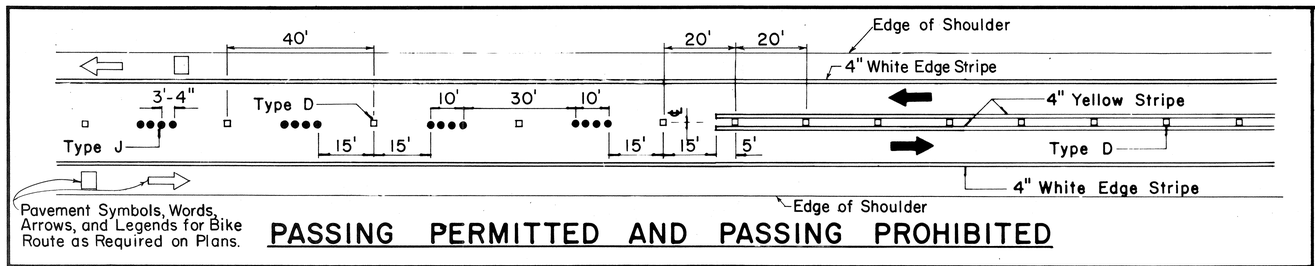

PASSING PERMITTED AND PASSING PROHIBITED

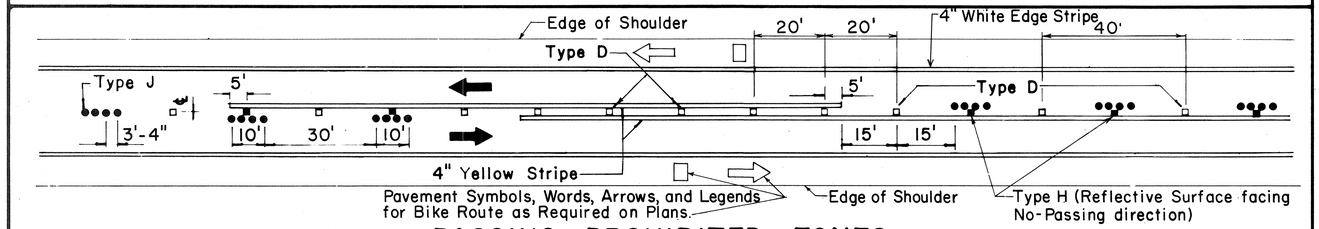

PASSING PROHIBITED ZONES

MULTI - LANE

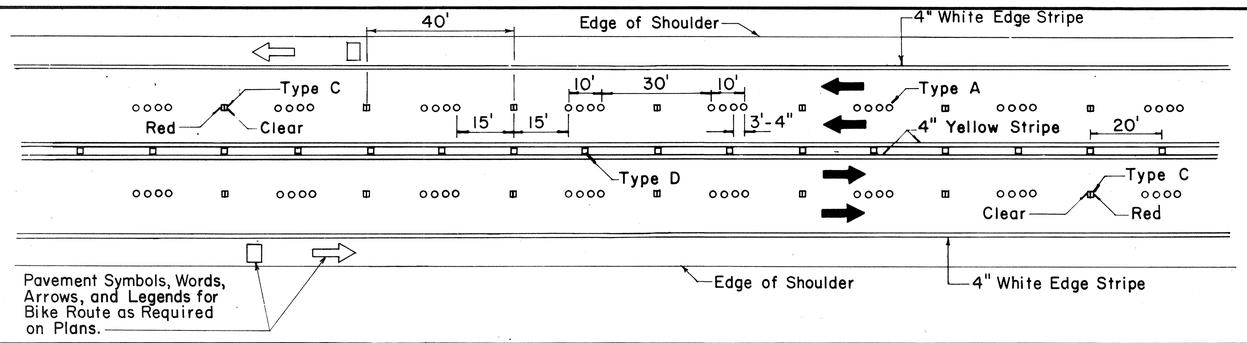

DIVIDED HIGHWAY AND FREEWAY

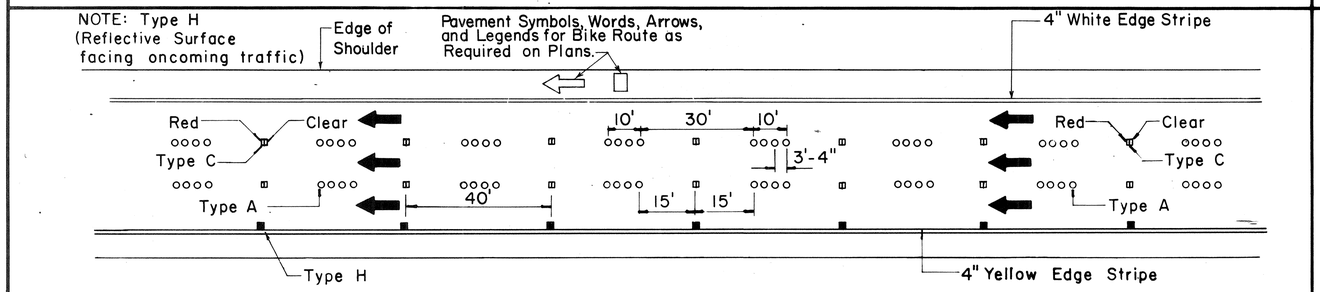

MISCELLANEOUS

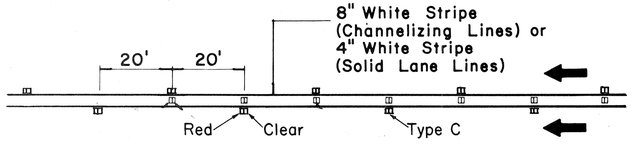

CHANNELIZING LINES OR SOLID LANE LINES

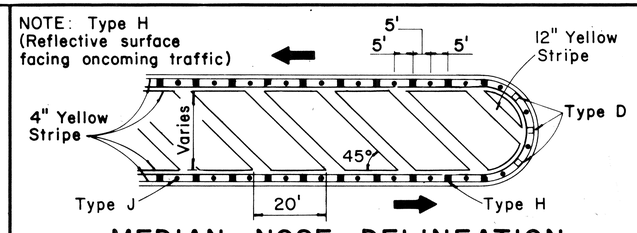

MEDIAN NOSE DELINEATION

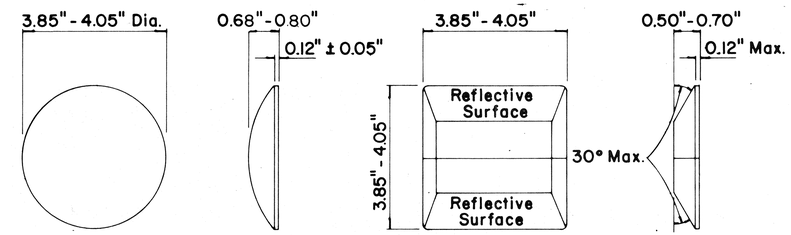

TYPE A
NON - REFLECTIVE WHITE MARKER

TYPE C
RED - CLEAR REFLECTIVE MARKER

TYPE J
NON - REFLECTIVE YELLOW MARKER

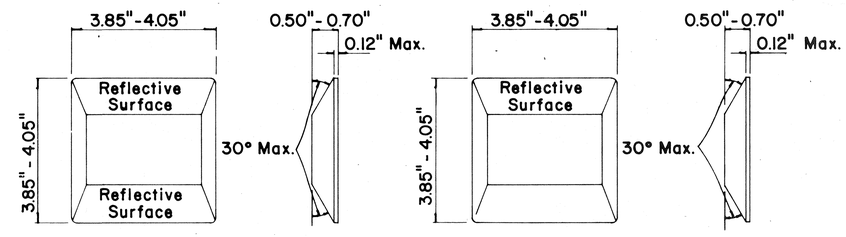

TYPE D
TWO - WAY YELLOW REFLECTIVE MARKER

TYPE H
ONE - WAY YELLOW REFLECTIVE MARKER

GENERAL NOTES

1. Pavement marking and striping shall conform to the latest "Manual on Uniform Traffic Control Devices for Streets and Highways," and as amended.
2. Layout and installation of pavement marking and striping shall be done by the Contractor. The Contractor shall check the layouts with the Engineer prior to performing work.
3. Edge lines shall not be continued through intersections and shall not be broken for driveways unless otherwise shown or directed.

LEGEND

- ○ Type A
- ⊡ Type C
- □ Type D
- ■ Type H
- ● Type J

APPROVAL RECOMMENDED:

Eiichi Tanaka — TRAFFIC ENGINEER — 7/21/78 DATE

APPROVED:

Herbert T. Takeishi — ASSISTANT CHIEF, ENGINEERING — 7/24/78 DATE

No.	REVISION	APPROVED BY	DATE
1	Supercedes DT 300 approved 11/18/71.	H.T.	7/24/78
2	Delete Type A Markers from Bike Route Delineation.	H.T.	10/15/79
3	Added General Note 3. Revised left edge stripe.	[illegible]	9-28-83
4	Revised Channelizing Lines or Solid Lane Lines.	E.T.	9/18/85

STATE OF HAWAII
DEPARTMENT OF TRANSPORTATION
HIGHWAYS DIVISION

STANDARD DETAILS
RAISED PAVEMENT MARKERS AND STRIPING

Not to Scale — July 1978

SHEET No. OF SHEETS DT 300

ORIGINAL PLAN	SURVEY PLOTTED BY	DATE
	DRAWN BY	
	TRACED BY	
NOTE BOOK	DESIGNED BY	
	QUANTITIES BY	
No.	CHECKED BY	

FED. ROAD DIST. NO.	STATE	FED. AID PROJ. NO.	FISCAL YEAR	SHEET NO.	TOTAL SHEETS
HAWAII	HAW.	19G-01-85	1986	20	25

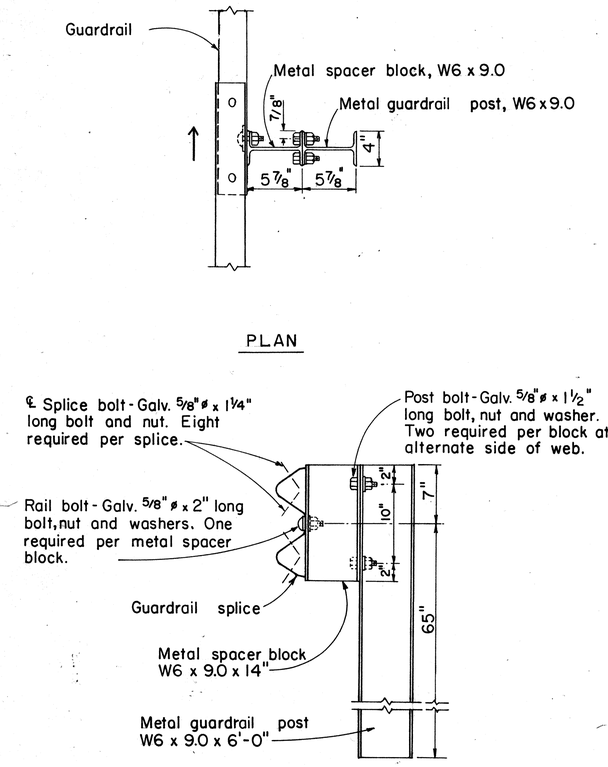

ELEVATION

SINGLE METAL GUARDRAIL ON METAL POST WITH METAL SPACER BLOCK

SCALE: 1½" = 1'-0"

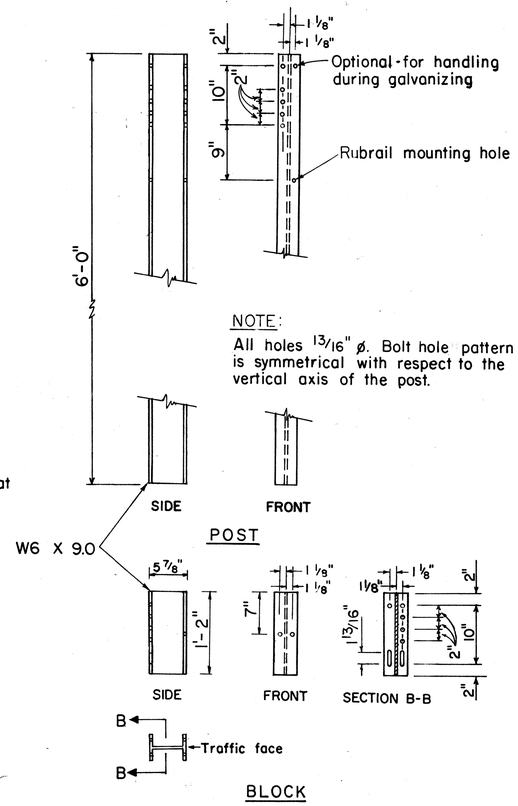

NOTE:
All holes 13/16" ø. Bolt hole pattern is symmetrical with respect to the vertical axis of the post.

STRUCTURAL SHAPE POST AND BLOCK

SCALE: 1" = 1'-0"

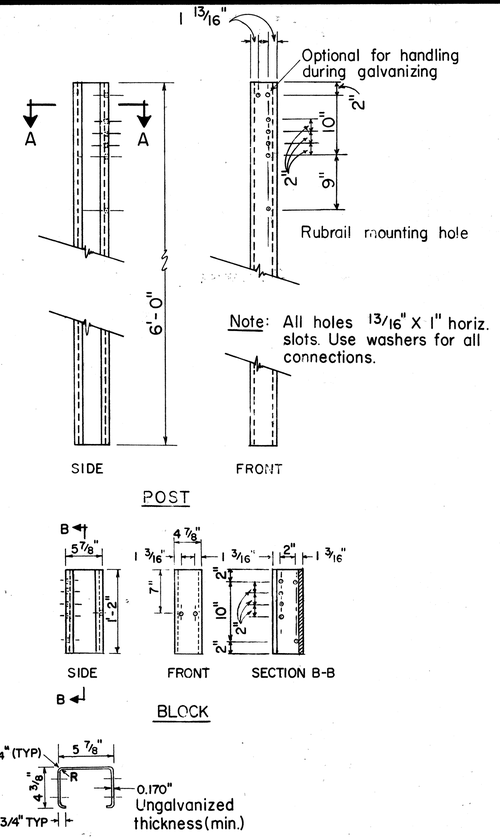

Note: All holes 13/16" X 1" horiz. slots. Use washers for all connections.

SECTION A-A
N.T.S.

BENT PLATE POST AND BLOCK

SCALE: 1" = 1'-0"

GENERAL NOTES

1. Both of the alternate type posts may be used on any one project however, only one type of post shall be used in any single run of guardrail.
2. All hardware, posts and blocks shall be galvanized. No punching, drilling or cutting will be permitted after galvanizing.
3. Connection details for bent plate post and block shall be similar to the details shown for structural shape post, and block.
4. Where conditions require, special post lengths in increments of 6 inches may be specified.
5. For details of rail elements, bolts and nuts, see sheet DT 501.
6. All fasteners, posts, blocks and rail elements shall conform to the latest edition and amendments of "A Guide to Standardized Highway Barrier Rail Hardware", a report prepared and approved by the AASHTO-AGC-ARTBA Joint Cooperative Committee.

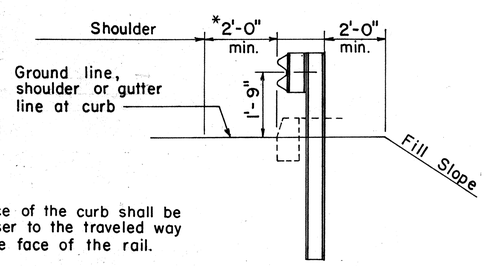

Note:
The face of the curb shall be no closer to the traveled way than the face of the rail.

AT SHOULDER SECTION

TYPICAL METAL GUARDRAIL DETAIL

SCALE: ½" = 1'-0"

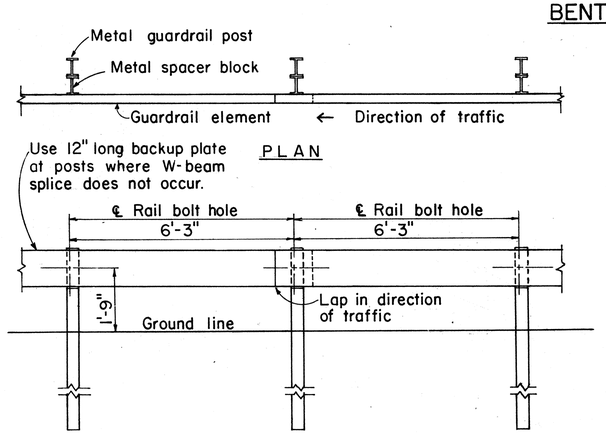

ELEVATION

METAL GUARDRAIL ON METAL POST WITH METAL SPACER BLOCK

SCALE: ½" = 1'-0"

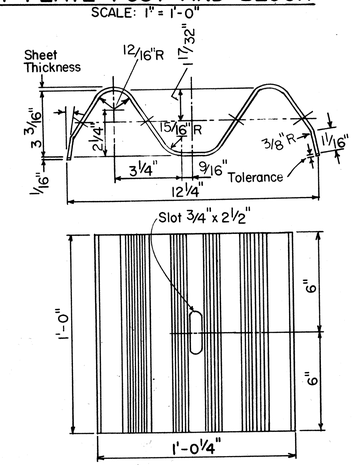

BACK-UP-PLATE

N.T.S.

APPROVAL RECOMMENDED:
Eichi Tanaka — TRAFFIC ENGINEER — DATE 9/7/82

APPROVED:
Herbert Tabishi — ASSISTANT CHIEF, ENGINEERING — DATE 9/22/82

NO.	REVISION	APPROVED BY	DATE
1	Supersedes sht. DT 500 approved 12/30/69.	H.P.	9/22/82
2	Added General Notes No. 6	RDO	9-28-83
3	Added details for adjusting guardrail height and added Back-up Plate	E.T.	9/18/85

STATE OF HAWAII
DEPARTMENT OF TRANSPORTATION
HIGHWAYS DIVISION

STANDARD DETAILS

METAL GUARDRAIL

Scale: As Shown — July, 1982

SHEET No. OF SHEETS DT 500

ORIGINAL PLAN | SURVEY PLOTTED BY | DRAWN BY | TRACED BY | DESIGNED BY | QUANTITIES BY | CHECKED BY | NOTE BOOK No. | DATE

FED. ROAD DIST. NO.	STATE	PROJ. NO.	FISCAL YEAR	SHEET NO.	TOTAL SHEETS
HAWAII	HAW.	10G-01-85	1986	21	25

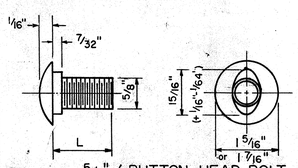

5/8" ø BUTTON HEAD BOLT

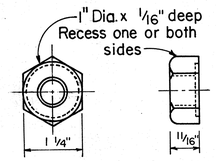

5/8" ø RECESS NUT

L	Thread Length	Intended Use
1 1/4"	Full length thread	Splice rail elements
2"	1 1/2" min. thread len.	Fasten rails to posts

5/8" BUTTON HEAD BOLT AND RECESS NUT

Scale: NTS

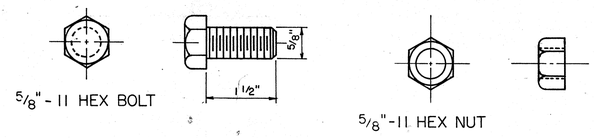

5/8" HEX POST BOLT AND NUT

Scale: N.T.S.

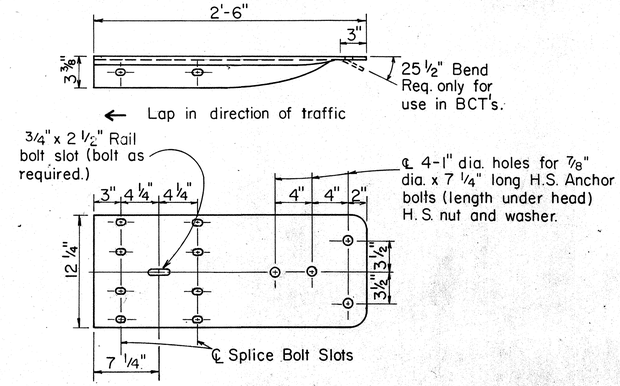

W BEAM TERMINAL CONNECTOR

Scale: 1 1/2" = 1'-0"

← Lap in direction of traffic

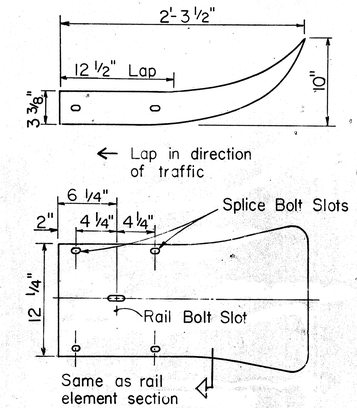

W BEAM END SECTION (FLARED)

Scale: 1 1/2" = 1'-0"

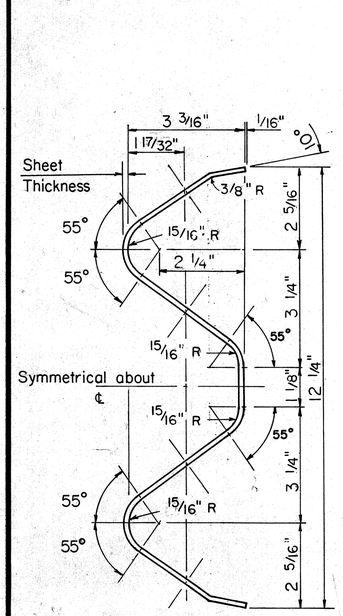

RAIL ELEMENT SECTION

Scale: 6" = 1'-0"

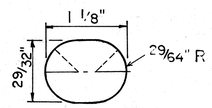

SPLICE BOLT SLOT

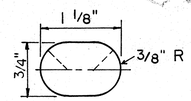

SPLICE BOLT SLOT FOR ALL ENDS

Scale: Full Size

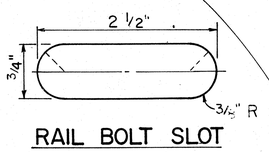

RAIL BOLT SLOT

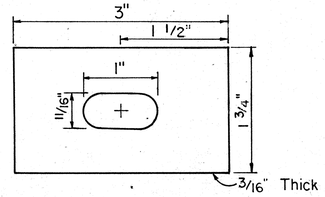

RAIL BOLT WASHER

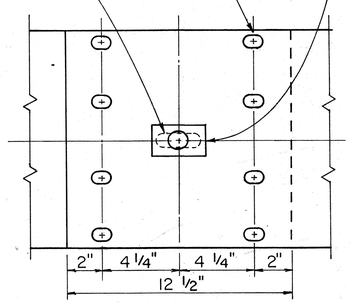

RAIL SPLICE

Scale: 3" = 1'-0"

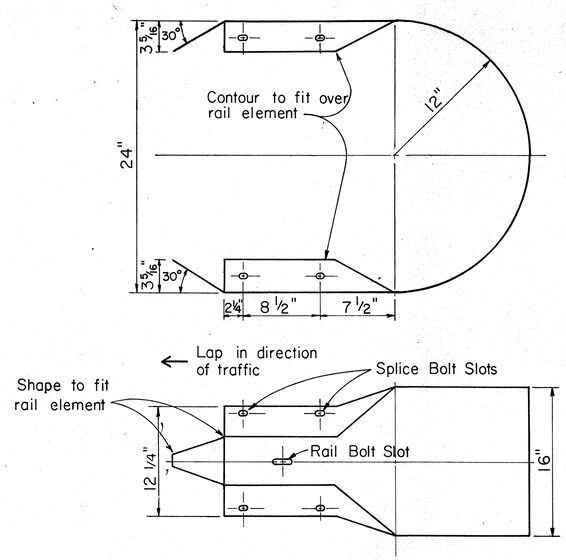

W BEAM END SECTION (BUFFER)

Scale: 1 1/2" = 1'-0"

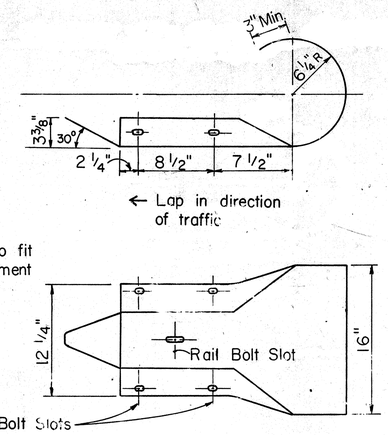

W BEAM END SECTION (ROUNDED)

Scale: 1 1/2" = 1'-0"

APPROVAL RECOMMENDED:

Eichi Tanaka — 9/20/82

TRAFFIC ENGINEER — DATE

APPROVED:

Herbert Sakishima — 9/22/82

ASSISTANT CHIEF, ENGINEERING — DATE

NO.	REVISION	APPROVED BY	DATE
1	Supersedes sht. DT 501 approved 12/30/69	H.F.	9/22/82

STATE OF HAWAII
DEPARTMENT OF TRANSPORTATION
HIGHWAYS DIVISION

STANDARD DETAILS

METAL GUARDRAIL

Scale: As Noted — July, 1982

SHEET No. OF SHEETS DT 501

ORIGINAL PLAN — NOTE BOOK No. — SURVEY PLOTTED BY — DRAWN BY — TRACED BY — DESIGNED BY — QUANTITIES BY — CHECKED BY — DATE

FED. ROAD DIST. NO.	STATE	PROJ. NO.	FISCAL YEAR	SHEET NO.	TOTAL SHEETS
HAWAII	HAW.	IOG-01-85	1986	22	25

NOTE:
1. Metal guard rail connection to structures requires End Post Connection. See structure plans.
2. For detail of Breakaway Cable Terminal (BCT) See Sheet No. DT 519

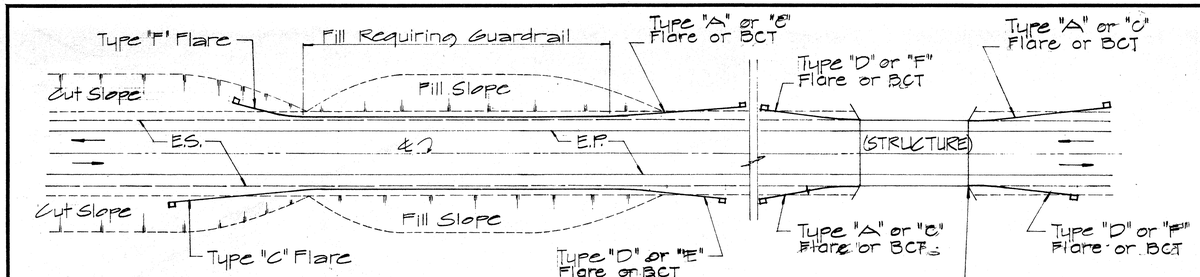

PLAN
TWO WAY ROADWAY
Sc. 1" = 40'

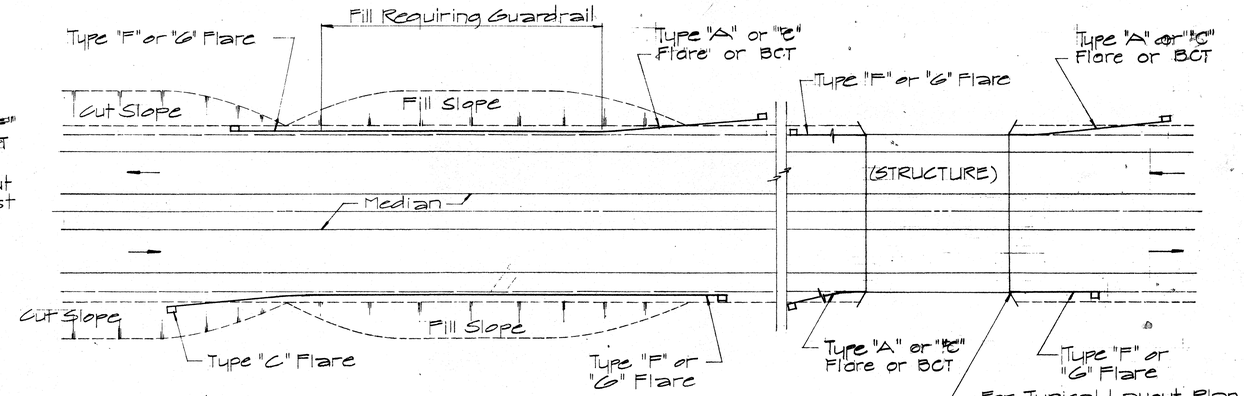

PLAN
ONE WAY ROADWAY (DIVIDED HIGHWAY)
Sc. 1" = 40'

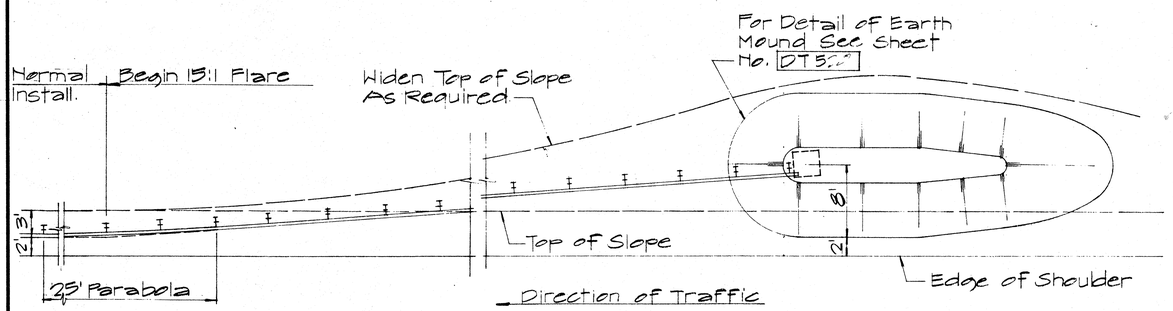

PLAN

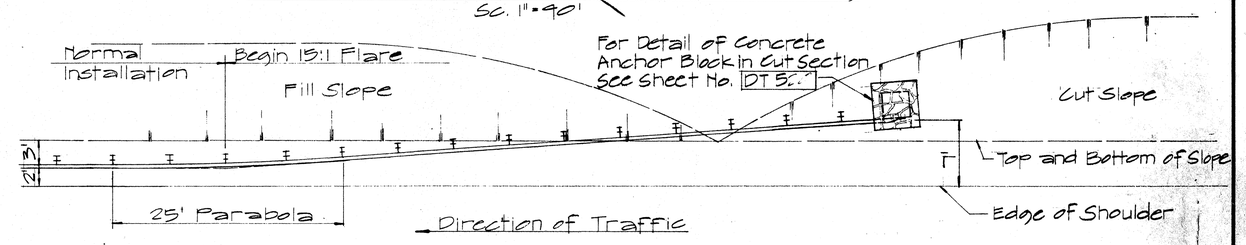

PLAN

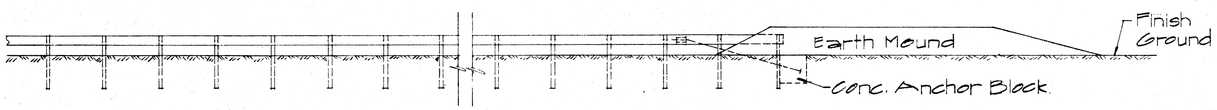

ELEVATION
TYPE "A" FLARE
Sc. 1/8" = 1'-0"

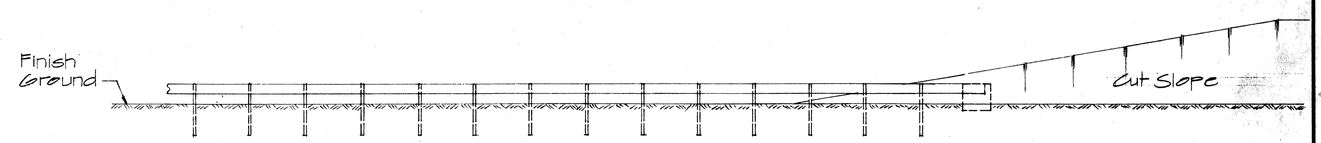

ELEVATION
TYPE "C" FLARE
Sc. 1/8" = 1'-0"

APPROVAL RECOMMENDED:
Euichi Tanaka — TRAFFIC ENGINEER — 12/29/69 DATE

APPROVED
ASSISTANT CHIEF, ENGINEERING — 12-30-69 DATE

NO.	REVISION	APPROVED BY	DATE
1	Delete Type "B" Flare and Type "E" Flare	H.J.	6/15/78

STATE OF HAWAII
DEPARTMENT OF TRANSPORTATION
HIGHWAYS DIVISION

STANDARD DETAILS OF APPROACH END FLARE - ONE & TWO WAY ROADWAY

Sc. As Noted — April 1969

SHEET No. OF SHEETS DT 516

22

ORIGINAL PLAN — NOTE BOOK No. — SURVEY PLOTTED BY — DRAWN BY — TRACED BY — DESIGNED BY — QUANTITIES BY — CHECKED BY — DATE

PRINTED ON NO. 1000H CLEARPRINT

FED. ROAD DIST. NO.	STATE	PROJ. NO.	FISCAL YEAR	SHEET NO.	TOTAL SHEETS
HAWAII	HAW.	120-01-85	1986	23	25

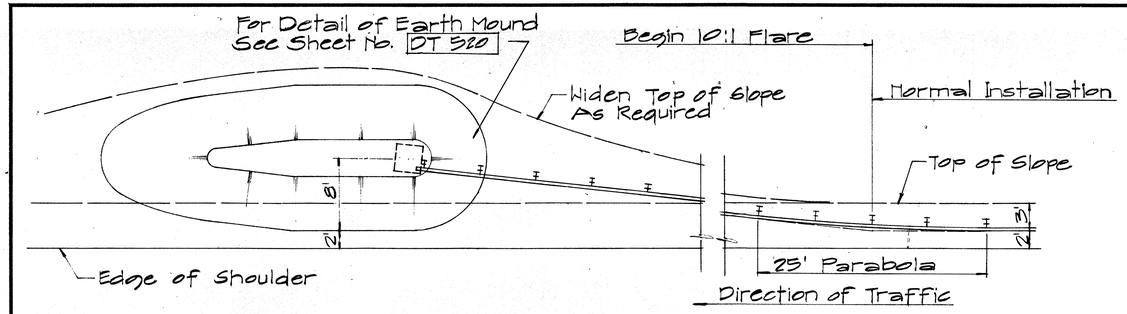

PLAN

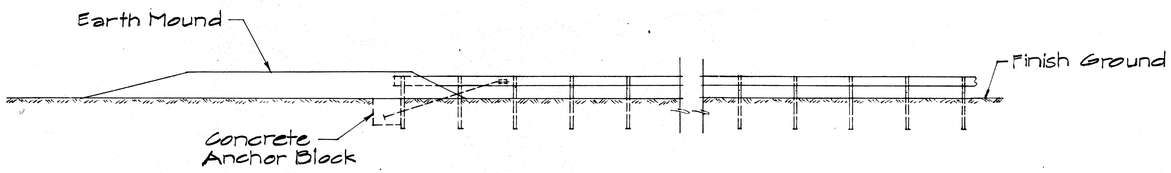

ELEVATION

TYPE "D" FLARE

Sc. 1/8" = 1'-0"

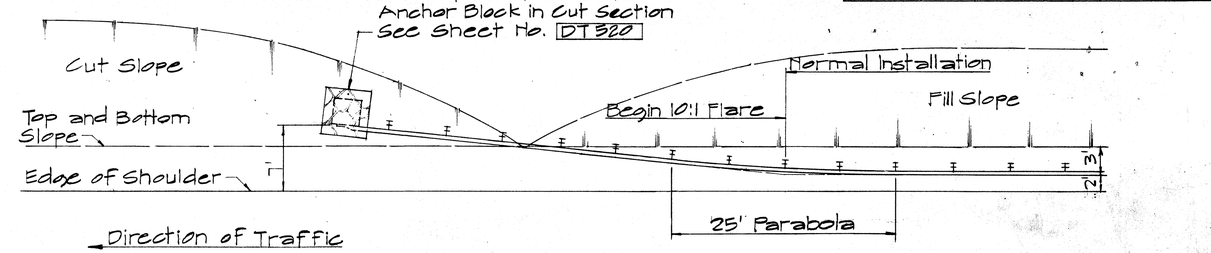

PLAN

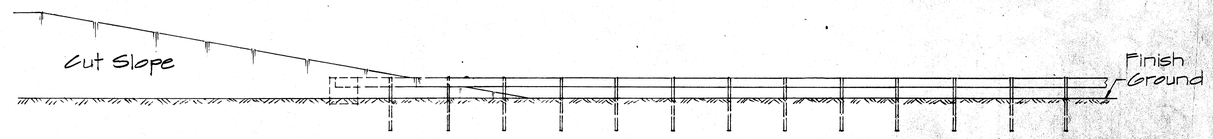

ELEVATION

TYPE "F" FLARE

Sc. 1/8" = 1'-0"

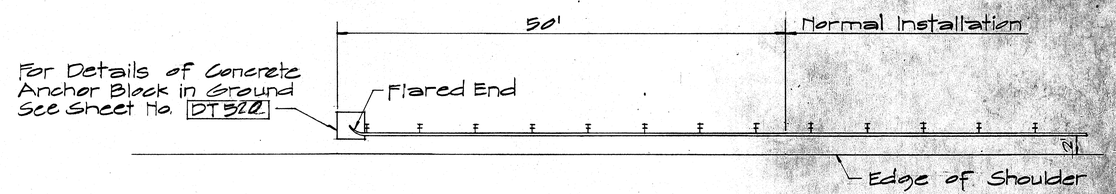

PLAN

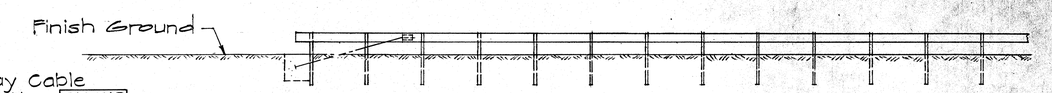

ELEVATION

TYPE "G" FLARE

Sc. 1/8" = 1'-0"

NOTE:

For detail of Breakaway Cable Terminal (BCT) See Sheet No. DT 517

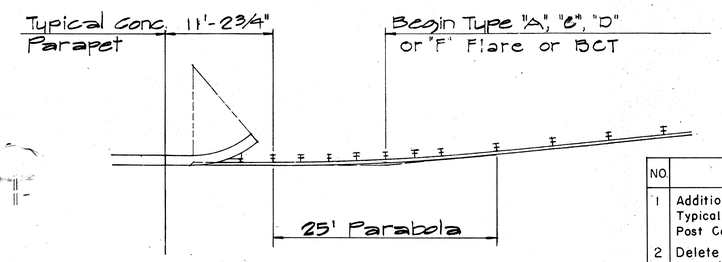

TYPICAL LAYOUT PLAN OF END POST CONNECTION

Sc. 1/8" = 1'-0"

APPROVAL RECOMMENDED:

Eiichi Tanaka — 12/29/69

TRAFFIC ENGINEER — DATE

APPROVED:

[signature] — 12-30-69

ASSISTANT CHIEF ENGINEERING — DATE

NO.	REVISION	APPROVED BY	DATE
1	Additional Posts Added to Typical Layout Plan Of End Post Connection	H.T.	4-12-72
2	Delete Type "B" Flare and Type "E" Flare	H.T.	6-15-78

STATE OF HAWAII
DEPARTMENT OF TRANSPORTATION
HIGHWAYS DIVISION

STANDARD DETAILS
TRAILING END
FLARE - ONE & TWO
WAY ROADWAY

Scale: As Noted — April 1969

SHEET No. DT 517 OF SHEETS

23

ORIGINAL PLAN	SURVEY PLOTTED BY	DATE
	DRAWN BY	
	TRACED BY	
NOTE BOOK	DESIGNED BY	
	QUANTITIES BY	
No.	CHECKED BY	

PRINTED ON NO. 1000H CLEARPRINT

FED. ROAD DIST. NO.	STATE	PROJ. NO.	FISCAL YEAR	SHEET NO.	TOTAL SHEETS
HAWAII	HAW.	10G-01-85	1986	24	25

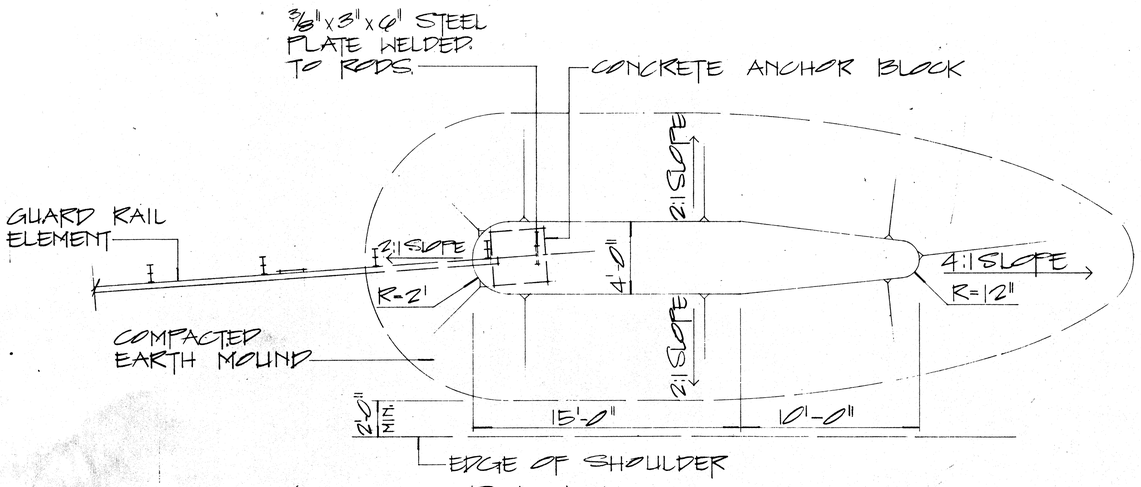

PLAN

EARTH MOUND DETAIL (SINGLE GUARD RAIL)

SCALE: 1/4" = 1'-0"

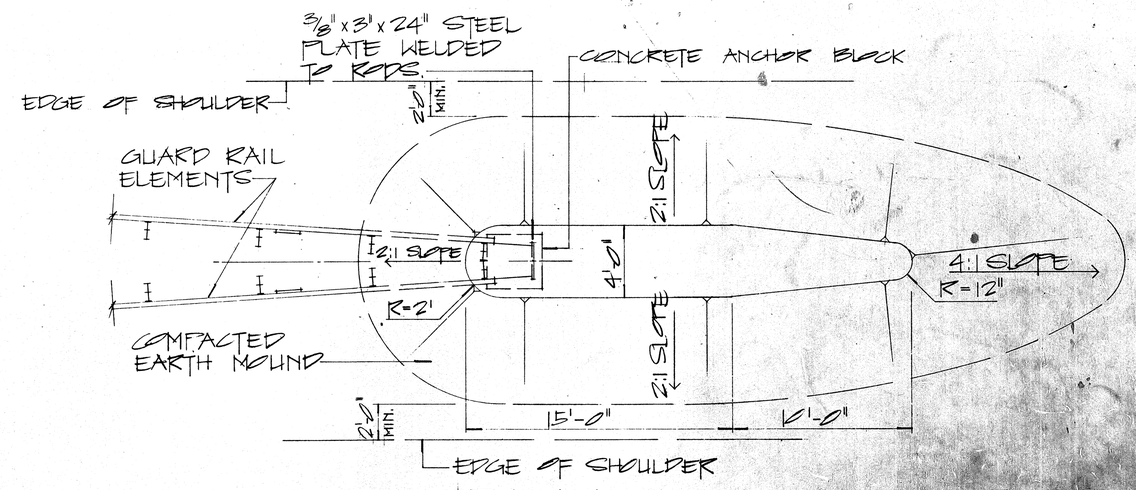

PLAN

EARTH MOUND DETAIL (DOUBLE GUARD RAIL)

SCALE: 1/4" = 1'-0"

* NOTE: 2'-0" WHEN INSTALLED WITH RUB RAIL.

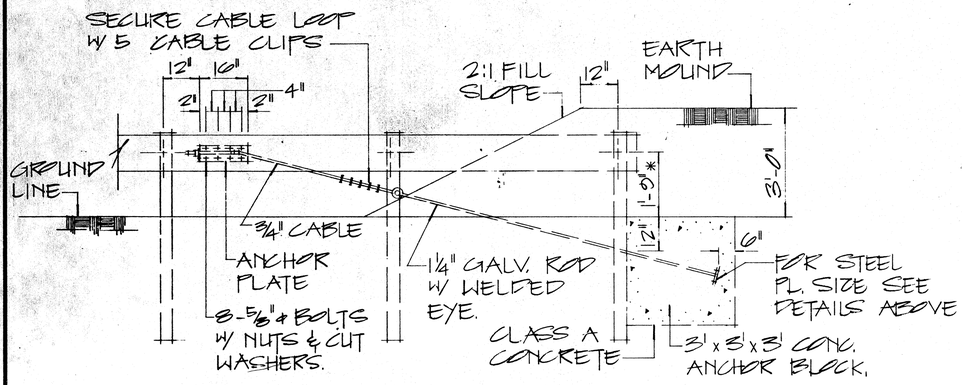

ANCHOR BLOCK DETAIL IN EARTH MOUND

SCALE: 1/2" = 1'-0"

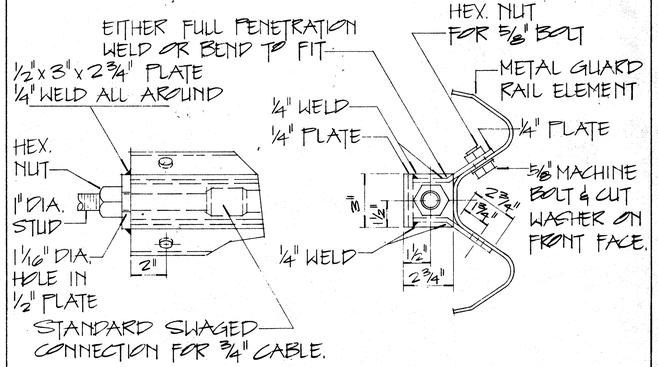

ANCHOR PLATE DETAILS

SCALE: 1" = 3"

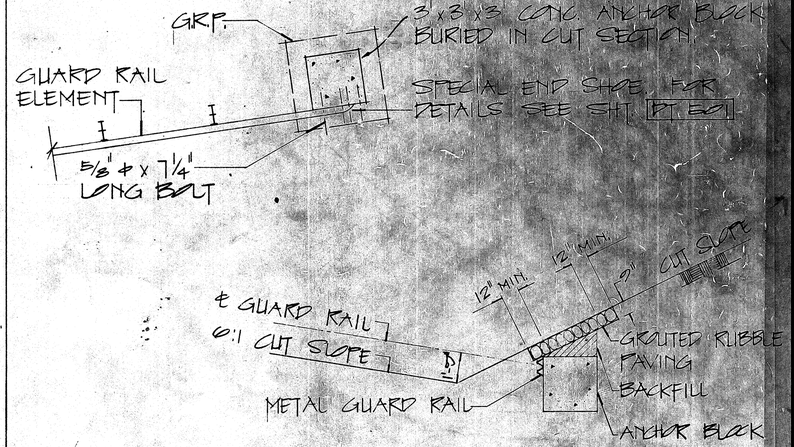

ANCHOR BLOCK IN CUT SECTION

SCALE: 1/4" = 1'-0"

NOTE:

1. GALVANIZED ANCHOR ROD, METAL GUARD RAIL AND POST BURIED IN GROUND SHALL BE COVERED WITH a Min. 20-Mil Thickness of Coal TAR ENAMEL. Conforming to AWWA Standard: C 203
2. CONCRETE, G.R.P., EXCAVATION, EARTH MOUND, ANCHOR RODS AND MISCELLANEOUS APPURTENANCES NECESSARY TO ANCHOR THE GUARD RAIL ENDS SHALL BE INCIDENTAL TO THE METAL GUARD RAIL.

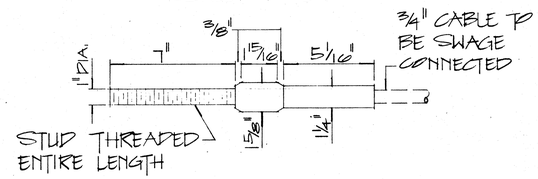

STANDARD SWAGED FITTING AND STUD

SCALE: 1" = 3"

APPROVAL RECOMMENDED: Euichi Tanaka — TRAFFIC ENGINEER — DATE 12/29/69

APPROVED: [signature] — ASSISTANT CHIEF, ENGINEERING — DATE 12-30-69

NO.	REVISION	APPROVED BY	DATE

STATE OF HAWAII
DEPARTMENT OF TRANSPORTATION
HIGHWAYS DIVISION

STANDARD DETAILS
EARTH MOUND AND ANCHOR BLOCK DETAILS

SCALE: AS SHOWN OCT 1969

SHEET No. OF SHEETS

ORIGINAL PLAN | SURVEY PLOTTED BY | DRAWN BY | TRACED BY | DESIGNED BY | QUANTITIES BY | CHECKED BY | NOTE BOOK No. | DATE

FED. ROAD DIST. NO.	STATE	PROJ. NO.	FISCAL YEAR	SHEET NO.	TOTAL SHEETS
HAWAII	HAW.	IG-01-85	1986	25	25

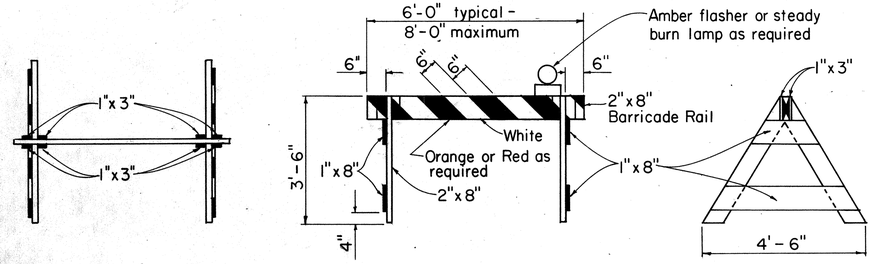

TYPE I BARRICADE

Scale: 1/2" = 1'-0"

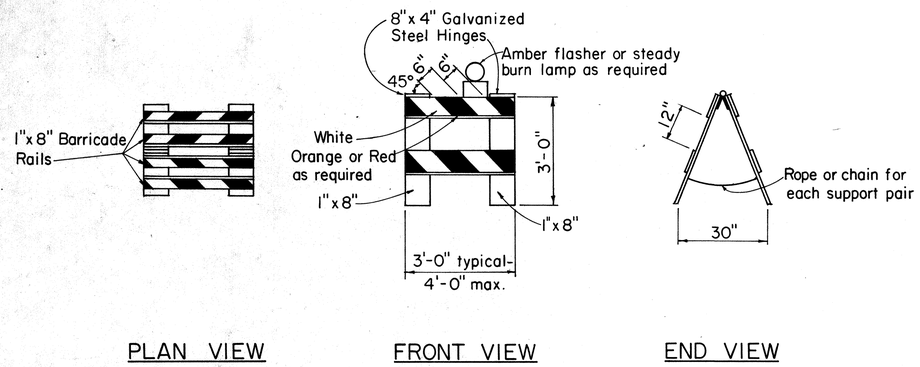

TYPE II BARRICADE

Scale: 1/2" = 1'-0"

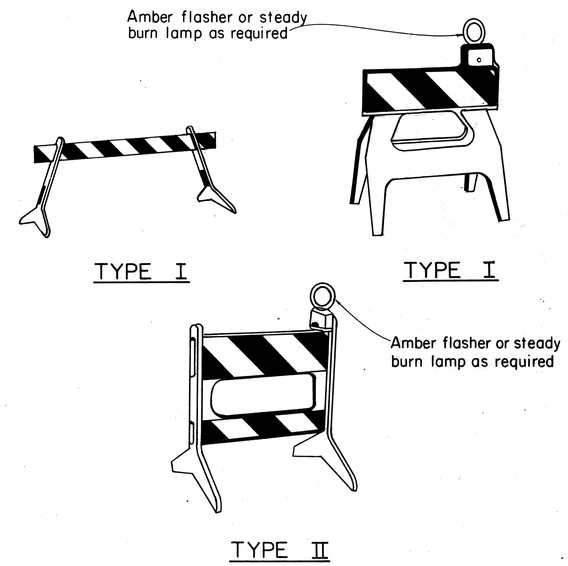

PLASTIC MOLDED BARRICADE OPTIONS*

Not to Scale

* Shop Drawings must be submitted for approval.

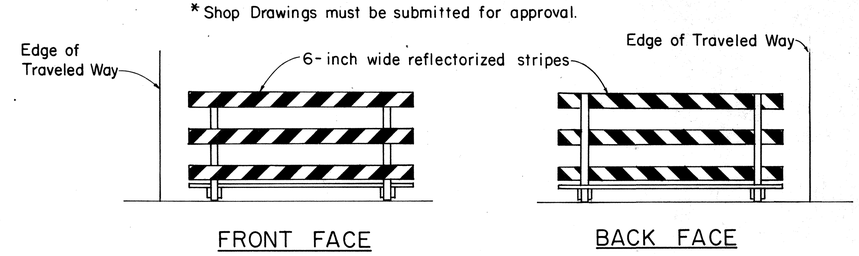

TYPICAL BARRICADE STRIPING DETAILS**

Not to Scale

** Similar for Types I & II

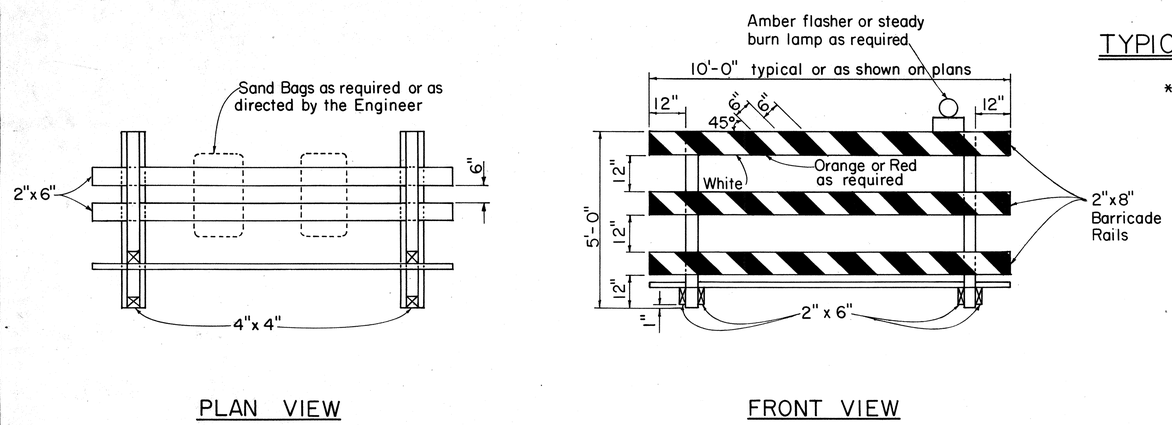

TYPE III BARRICADE

Scale: 1/2" = 1'-0"

GENERAL NOTES

1. The front and back faces of each barricade rail shall be reflectorized with stripes sloping downward toward the same side (traveled way) of each barricade.
2. Contractor may submit alternate barricade designs for approval.
3. Sandbags or other approved weights shall not be placed on top of any striped rail.
4. The Contractor is directed to Section 626.

APPROVAL RECOMMENDED:

Eiichi Tanaka — 10/21/81
TRAFFIC ENGINEER — DATE

APPROVED:

Hubert S. Sakishi — 10/23/81
ASSISTANT CHIEF, ENGINEERING — DATE

NO.	REVISION	APPROVED BY	DATE
1	Supercedes DT 800 Approved 12/30/69	HT.	10/23/81

STATE OF HAWAII
DEPARTMENT OF TRANSPORTATION
HIGHWAYS DIVISION

STANDARD DETAILS

BARRICADES

SCALE: As Shown

SHEET No. 25 OF SHEETS DT 800

ORIGINAL PLAN | SURVEY PLOTTED BY | DRAWN BY | TRACED BY | DESIGNED BY | QUANTITIES BY | CHECKED BY | DATE
NOTE BOOK No.