FED. ROAD DIST. NO.	STATE	FED. AID PROJ. NO.	FISCAL YEAR	SHEET NO.	TOTAL SHEETS
HAWAII	HAW.	BR-019-2(57)	2005	10	13

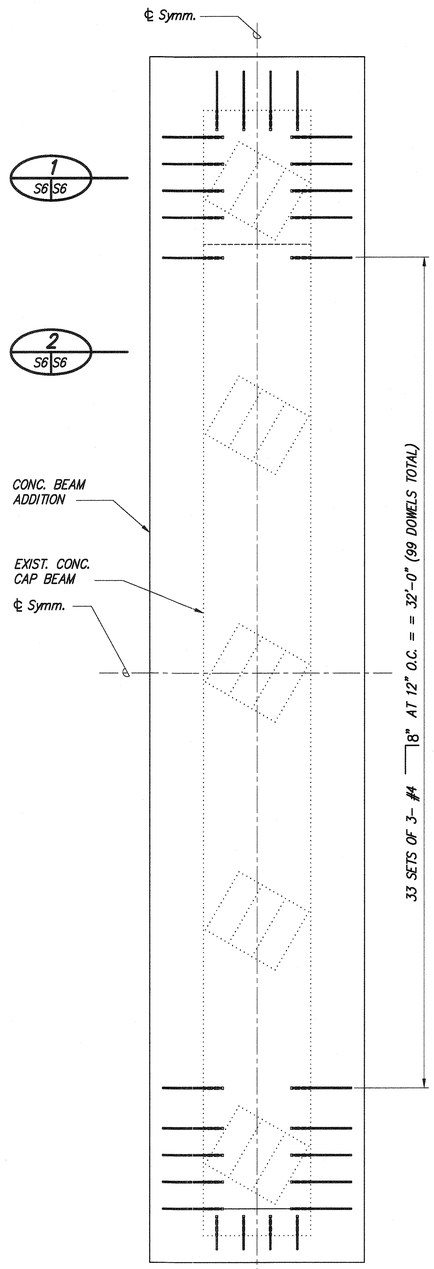

PLAN (A S6 S6)
SCALE: 3/8"=1'-0"

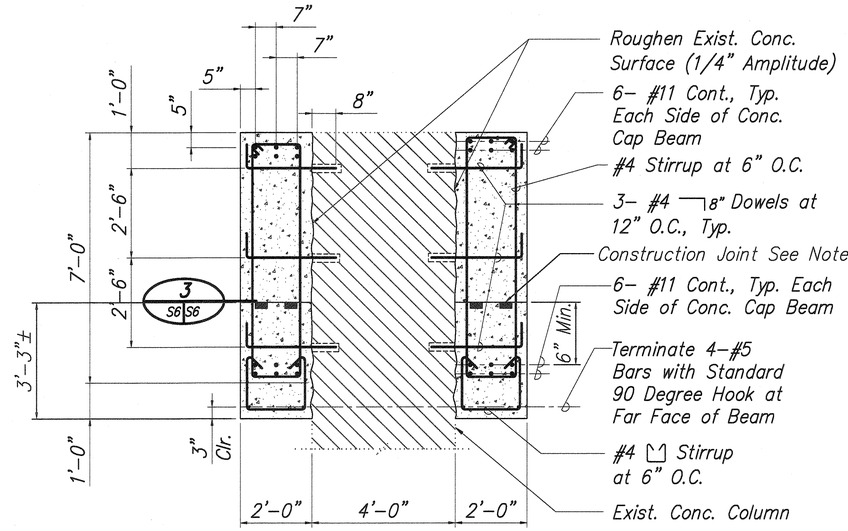

Note:
Exist. Conc. Girder not Shown for Clarity.

SECTION (1 S6 S6)
SCALE: 1/2"=1'-0"

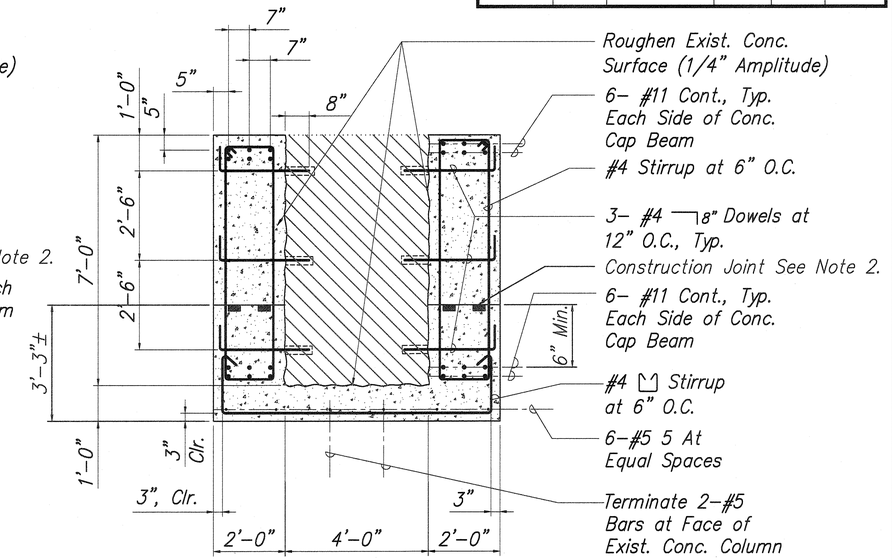

Notes:
1) Exist. Conc. Girder not Shown for Clarity.
2) Roughen Joint Surface By Stamping with 4 x 4 Two Inches Deep in Two Rows at 18" O.c.

SECTION (2 S6)
SCALE: 1/2"=1'-0"

S2, S6

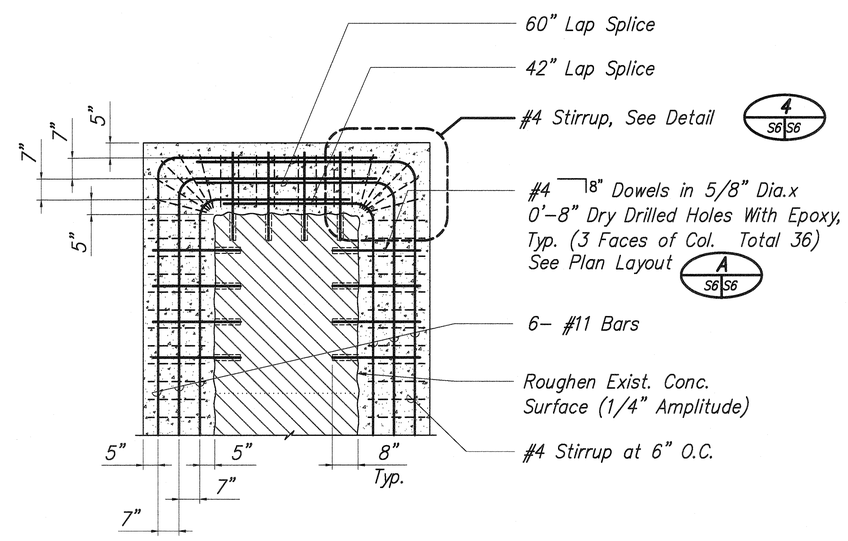

SECTION (3 S6 S6)
SCALE: 1/2"=1'-0"

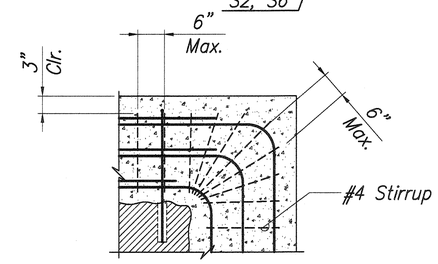

DETAIL (4 S6 S6)
SCALE: 3/4"=1'-0"

LEE T. TAKUSHI
LICENSED PROFESSIONAL ENGINEER
NO. 4767-S
HAWAII USA

Lee T. Takushi 04/30/06
SIGNATURE EXP. DATE OF THE LICENSE
THIS WORK WAS PREPARED BY ME OR UNDER MY SUPERVISION

DATE	REVISION

STATE OF HAWAII
DEPARTMENT OF TRANSPORTATION
HIGHWAYS DIVISION

MOANALULU BRIDGE
PIER NO. 1
NEW CONDITIONS PLAN AND SECTIONS

HAWAII BELT ROAD, SEISMIC RETROFIT OF VARIOUS BRIDGES,
VICINITY OF LAUPAHOEHOE
FEDERAL AID PROJECT NO. BR-019-2(57)

SCALE: AS NOTED DATE: OCT 2004

SHEET No. S6 OF 9 SHEETS

ORIGINAL PLAN
SURVEY PLOTTED BY ____ DATE
DRAWN BY ____ " " "
TRACED BY ____ " " "
DESIGNED BY ____ " " "
QUANTITIES BY ____
CHECKED BY ____
NOTE BOOK ____
No. ____

"AS-BUILT"