FED. ROAD DIST. NO.	STATE	FED. AID PROJ. NO.	FISCAL YEAR	SHEET NO.	TOTAL SHEETS
HAWAII	HAW.	BR-019-2(57)	2005	12	13

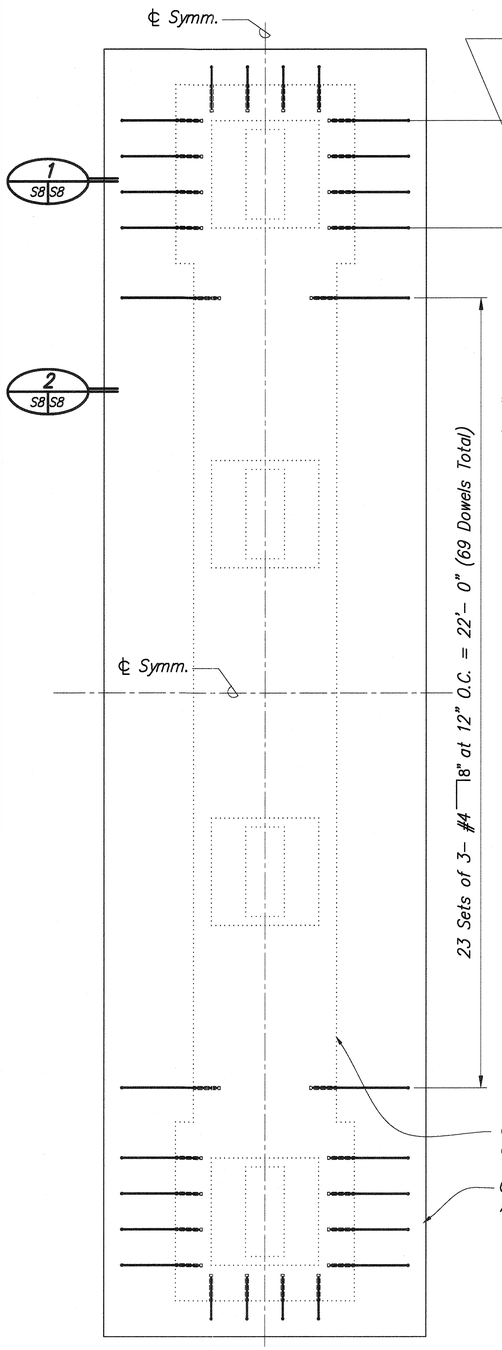

PLAN (A S8 S8)
SCALE: 1/2"=1'-0"

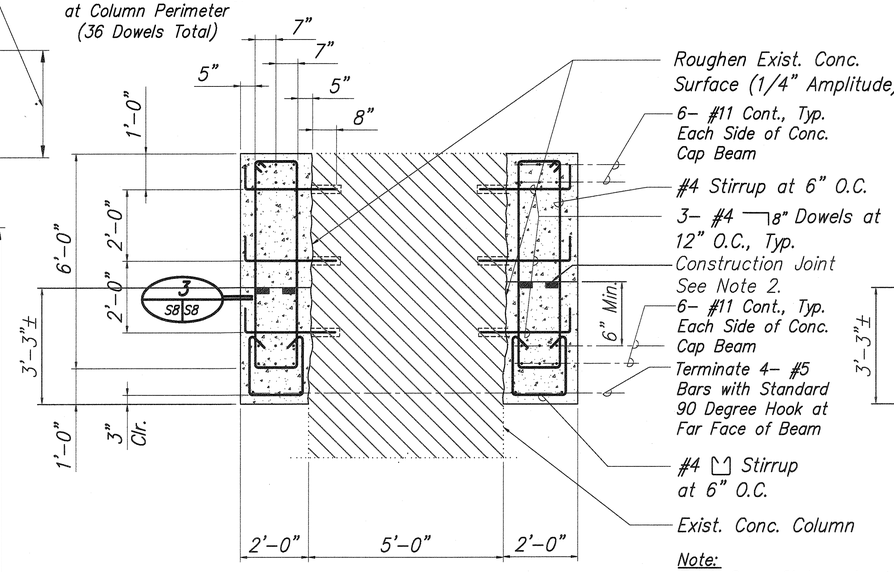

Note:
Exist. Conc. Girder not Shown for Clarity.

SECTION (1 S8 S8)
SCALE: 1/2"=1'-0"

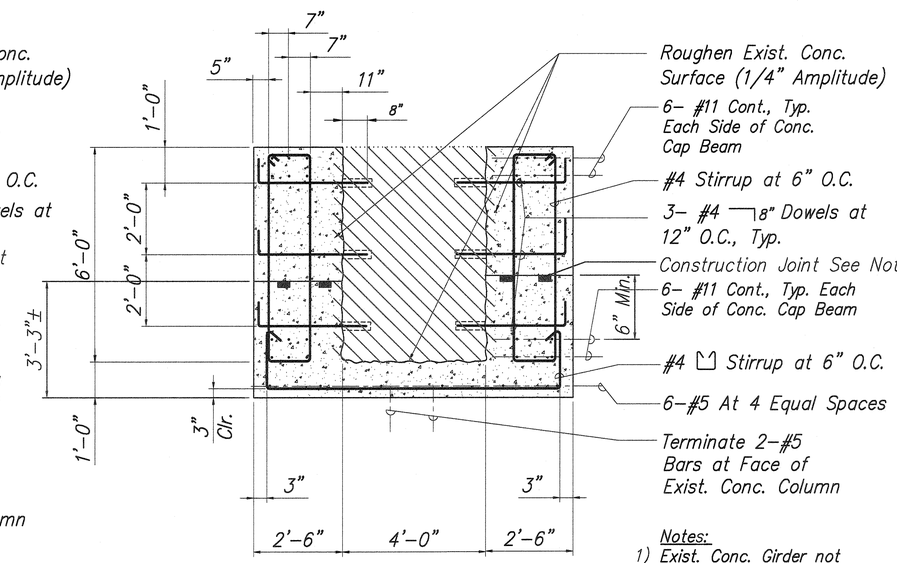

Notes:
1) Exist. Conc. Girder not Shown for Clarity.
2) Roughen Joint Surface By Stamping with 4 x 4 Two Inches Deep in Two Rows at 18" O.c.

SECTION (2 S8)
SCALE: 1/2"=1'-0"
S5, S8

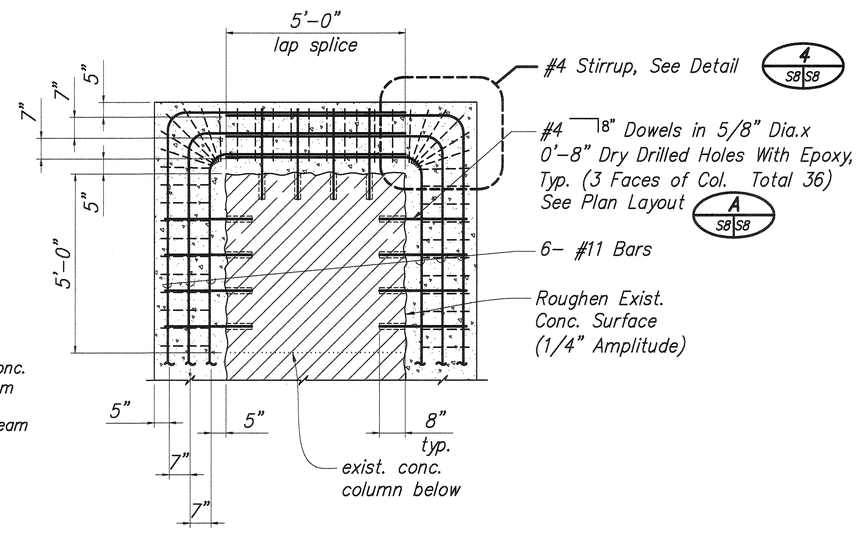

SECTION (3 S8 S8)
SCALE: 1/2"=1'-0"

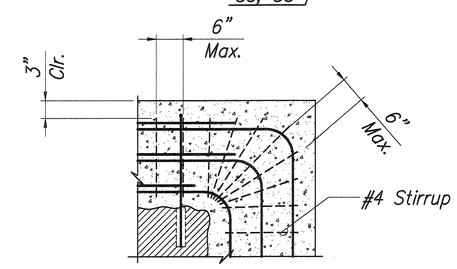

DETAIL (4 S8 S8)
SCALE: 3/4"=1'-0"

ORIGINAL PLAN	SURVEY PLOTTED BY	DATE
	DRAWN BY	"
NOTE BOOK	TRACED BY	"
	DESIGNED BY	"
No.	QUANTITIES BY	"
	CHECKED BY	

LEE T. TAKUSHI LICENSED PROFESSIONAL ENGINEER NO. 4767-S HAWAII USA

04/30/06
SIGNATURE EXP. DATE OF THE LICENSE
THIS WORK WAS PREPARED BY ME OR UNDER MY SUPERVISION

DATE	REVISION

STATE OF HAWAII
DEPARTMENT OF TRANSPORTATION
HIGHWAYS DIVISION

KILAU BRIDGE
PIER NO. 1 AND NO. 2
NEW CONDITIONS PLAN AND SECTIONS

HAWAII BELT ROAD, SEISMIC RETROFIT OF VARIOUS BRIDGES, VICINITY OF LAUPAHOEHOE
FEDERAL AID PROJECT NO. BR-019-2(57)

SCALE: AS NOTED DATE: OCT 2004

SHEET No. S8 OF 9 SHEETS

"AS-BUILT"