FED. ROAD DIST. NO.	STATE	PROJ. NO.	FISCAL YEAR	SHEET NO.	TOTAL SHEETS
HAWAII	HAW.	19H-01-76	1976	2	6

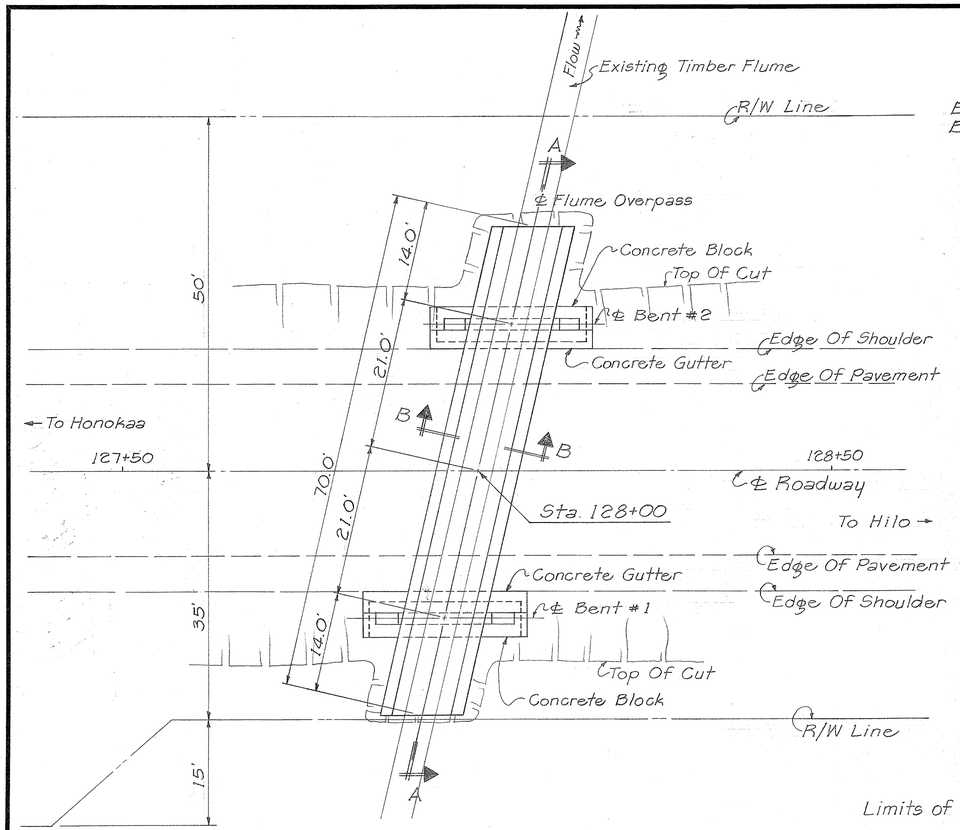

LAYOUT PLAN

Scale: 1"=10'

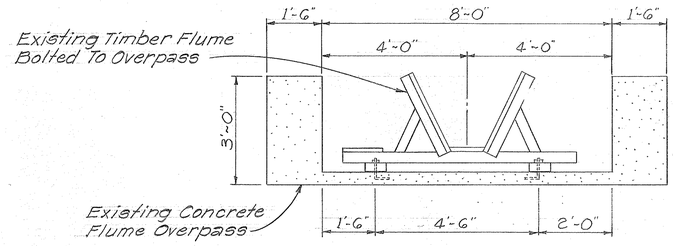

SECTION B-B

Scale: 1/2"=1'-0"

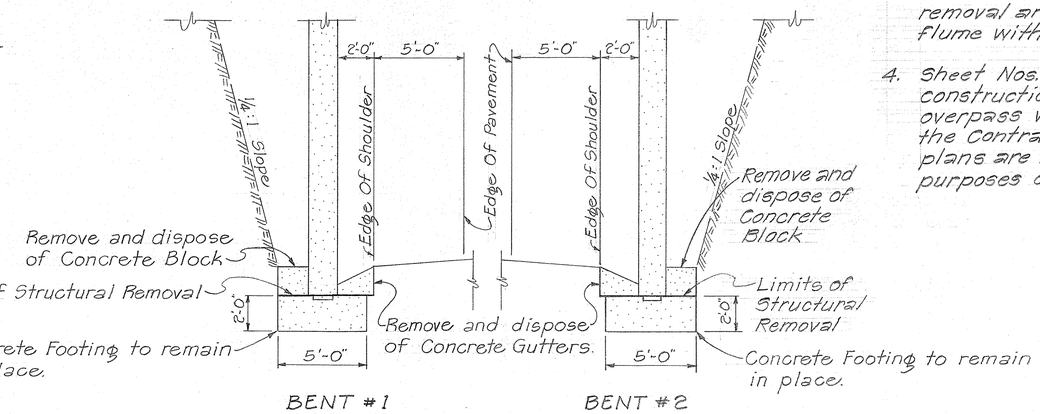

TYPICAL SECTION

Scale: 1/4"=1'-0"

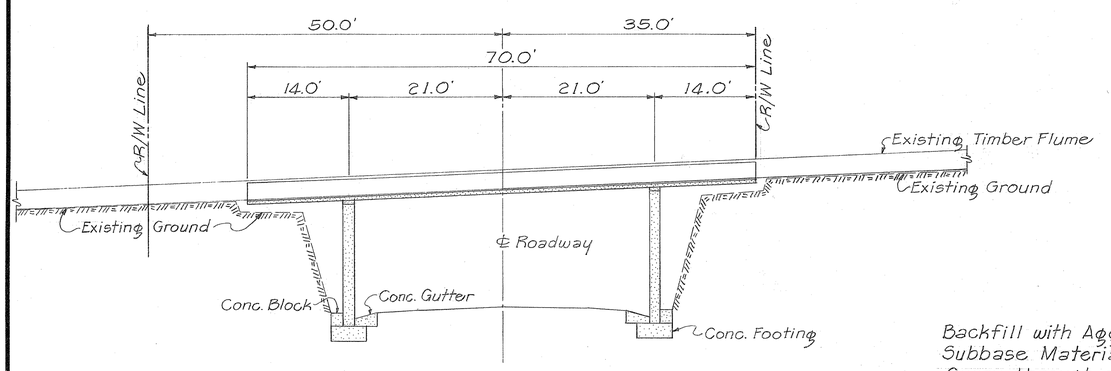

SECTION A-A

Scale: 1"=10'

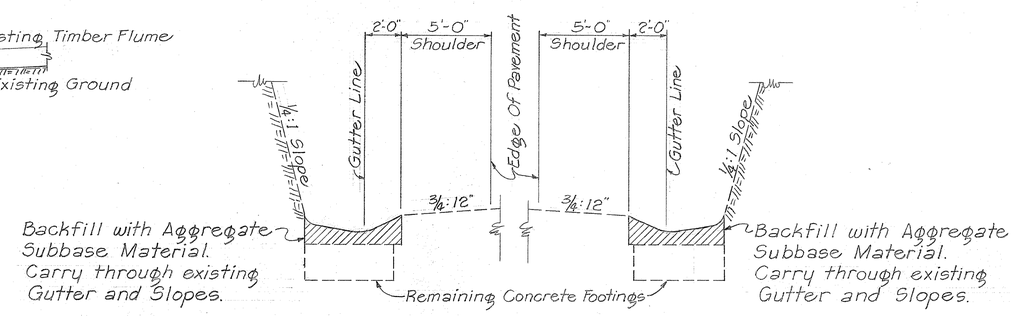

TYPICAL SECTION AFTER REMOVAL OF FLUME OVERPASS

Scale: 1/4"=1'-0"

GENERAL NOTES

1. The Contractor shall provide, erect, and maintain all necessary barricades, suitable and sufficient lights, danger signals, signs and other traffic control devices, and shall take all necessary precautions for the protection of the work and safety of the public. For additional requirements, see Subsections 107.13 - Public Convenience and Safety, 107.14 - Barricades and Warning Signs.
2. Work performed by the Contractor for the convenience and safety of the public shall be considered to be incidental to Item No. 208.01 and no additional compensation will be allowed.
3. Contractor to coordinate manner of removal and disposition of timber flume with owner, Maunakea Sugar Co.
4. Sheet Nos. 3 to 5 are part of the original construction plans of existing flume overpass which are provided to assist the Contractor to plan his work. These plans are included for informational purposes only.

ORIGINAL PLAN	SURVEY PLOTTED BY	DATE
	DRAWN BY	"
	TRACED BY	"
NOTE BOOK	DESIGNED BY	"
	QUANTITIES BY	"
No.	CHECKED BY	"

STATE OF HAWAII
DEPARTMENT OF TRANSPORTATION
HIGHWAYS DIVISION

HAWAII BELT ROAD
REMOVAL OF
HAKALAU FLUME OVERPASS
KAMAEE STATION
PROJECT Nº 19H-01-76
North Hilo, Hawaii

Scale: As Shown Date: October, 1975

SHEET No. 1 OF 1 SHEETS

2

19H-01-76