FED. ROAD DIST. NO.	STATE	FED. AID PROJ. NO.	FISCAL YEAR	SHEET NO.	TOTAL SHEETS
HAWAII	HAW	14-B(1)	1941	26	92

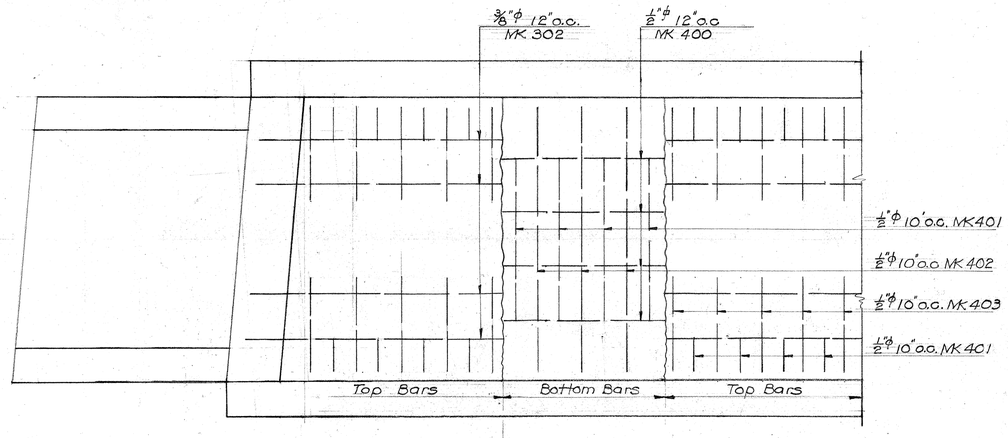

PLAN SHOWING STEEL ARRANGEMENT
Scale: 3/4" = 1'-0"

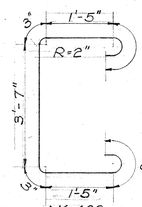

MK 403
82 required

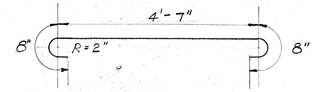

MK 402
90 required

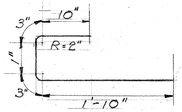

MK 404
82 required

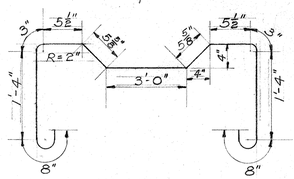

MK 401
80 required

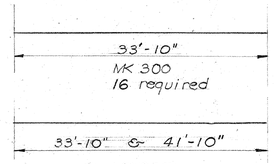

MK 300
16 required

MK 302
8 & 4 required each resp.

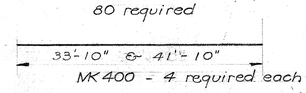

MK 400 - 4 required each

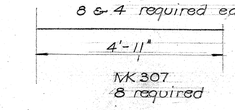

MK 307
8 required

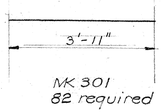

MK 301
82 required

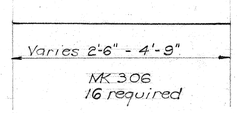

MK 306
16 required

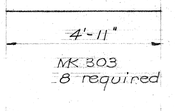

MK 303
8 required

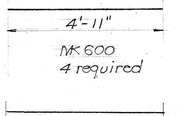

MK 600
4 required

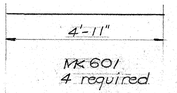

MK 601
4 required

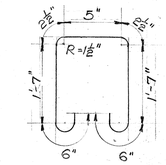

MK 304
12 required.

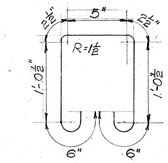

MK 308
12 required

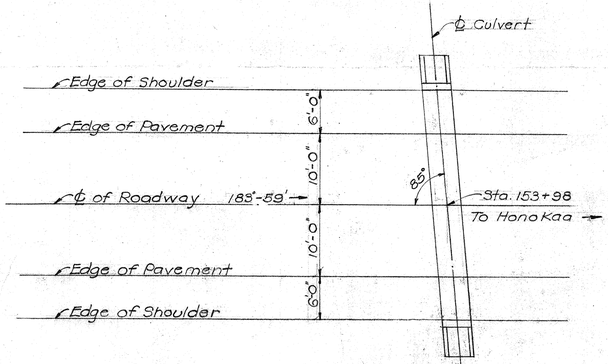

PLAN
Scale: 1" = 10'

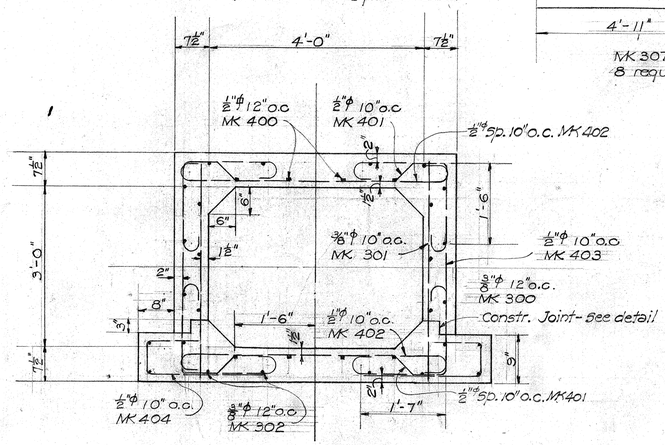

NORMAL SECTION
Scale: 3/4" = 1'-0"

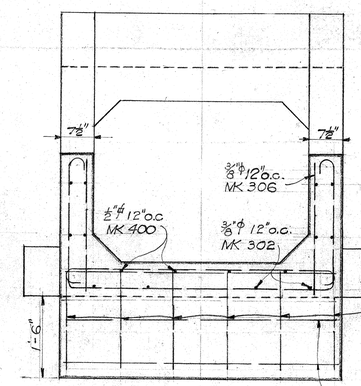

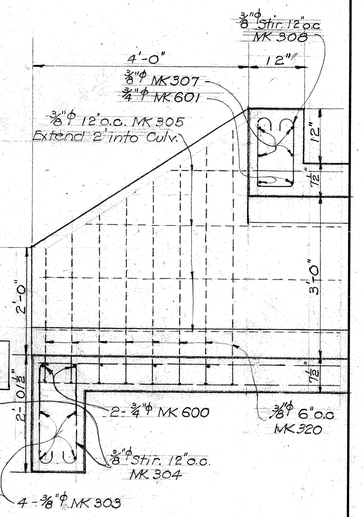

SECTIONS - INTAKE & OUTLET
Scale: 3/4" = 1'-0"

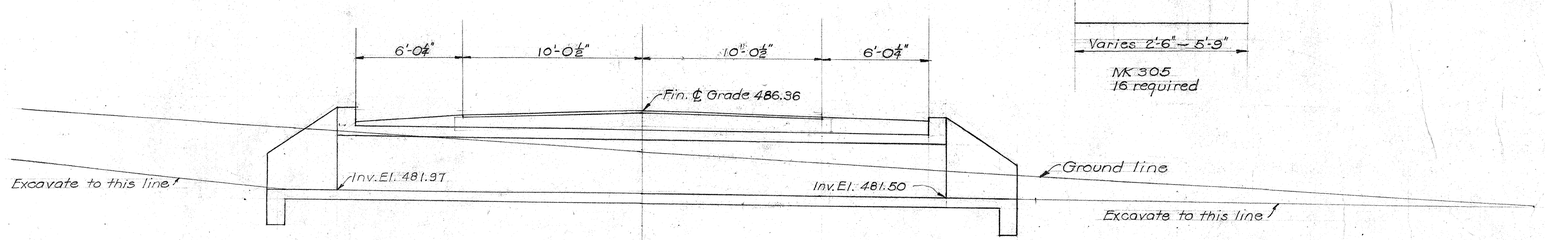

SECTION ALONG ℄ CULVERT
Scale: 1/4" = 1'

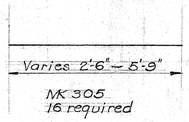

MK 305
16 required

ESTIMATED QUANTITIES

Class "A" Concrete	= 18 c.y.
Reinforcing Steel	= 2440 lbs.
Structural Excavation	= 41 c.y.
Channel Excavation	= 12 c.y.

TERRITORIAL HIGHWAY DEPARTMENT
TERRITORY OF HAWAII

4×3 CONCRETE BOX CULVERT
STA. 153+98
F.A.P. 14-B(1)

Scale: As Noted — Aug. 6, 1940

SHEET № 1 OF 1 SHEETS

ORIGINAL PLAN		
	SURVEY PLOTTED BY	DATE
	DESIGNED BY	"
	DRAWN BY	"
	TRACED BY	"
NOTE BOOK	QUANTITIES BY	"
	QUANTITIES CHECKED BY	"
No.	CHECKED BY	"

5039.26

25

FED. ROAD DIST. NO.	STATE	FED. AID PROJ. NO.	FISCAL YEAR	SHEET NO.	TOTAL SHEETS
HAWAII	HAW	14-B(1)	1941	27	92

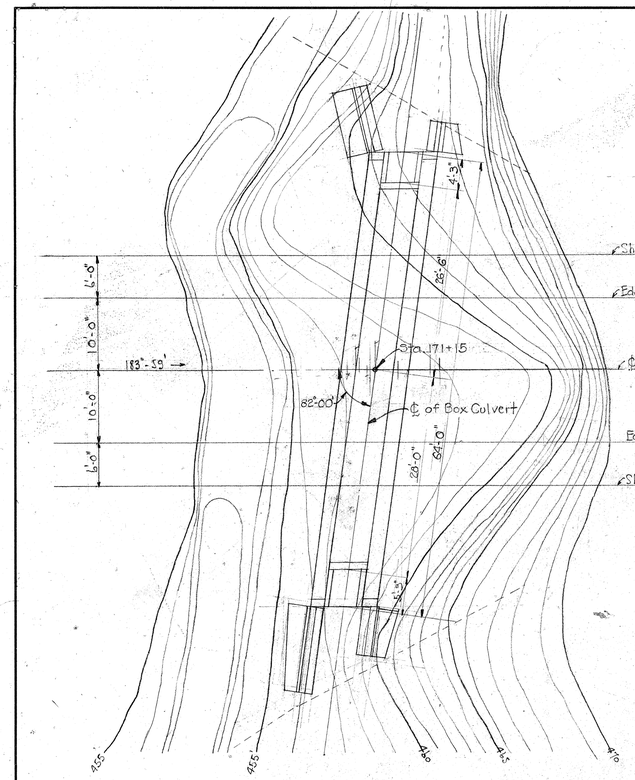

PLAN
Scale: 1" = 10'

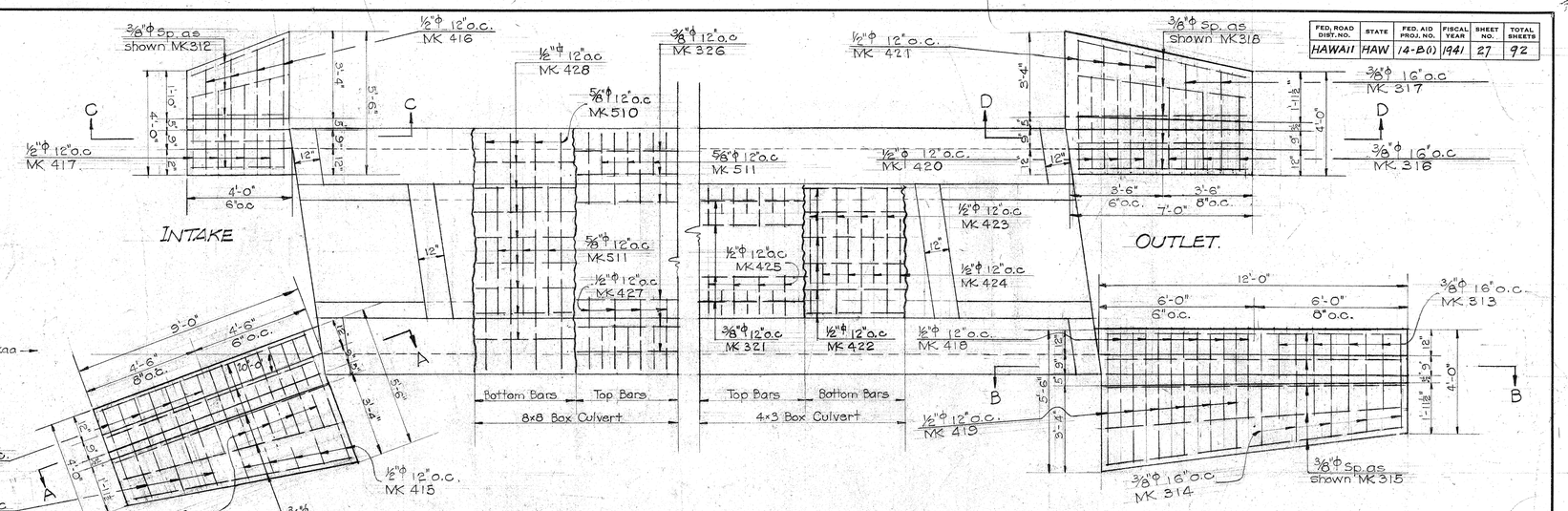

PLAN SHOWING STEEL REINFORCEMENT
Scale: 3/8" = 1'-0"

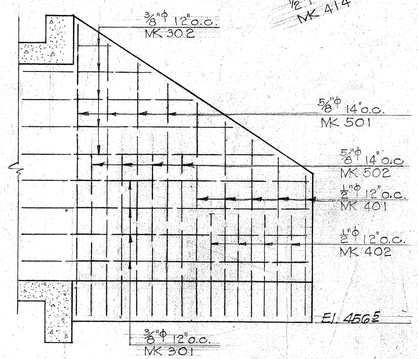

SECTION A-A
SHOWING REINFORCEMENT FOR REAR FACE
Scale: 3/8" = 1'-0"

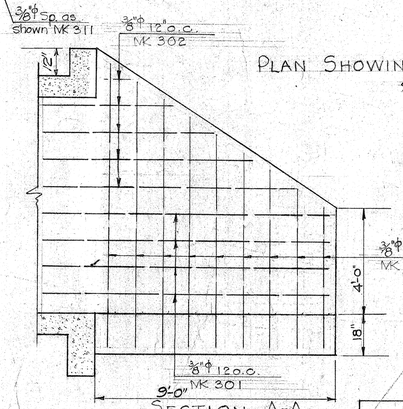

SECTION A-A
SHOWING REINFORCEMENT FOR FRONT FACE
Scale: 3/8" = 1'-0"

MK 301
8 required

Varies 1'-2" to 7'-3"
Av. 4'-3" MK 302
10 required

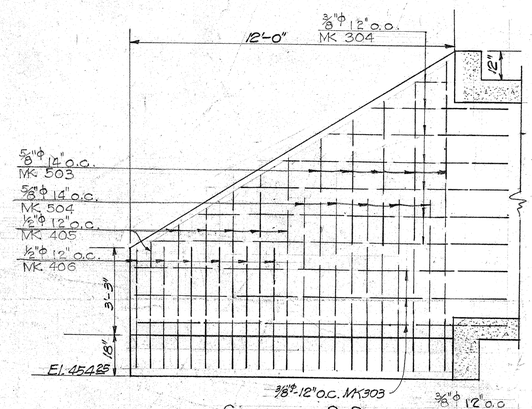

SECTION B-B
SHOWING REINFORCEMENT FOR REAR FACE
Scale: 3/8" = 1'-0"

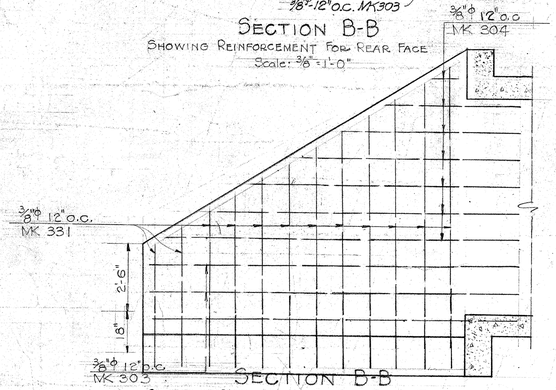

SECTION B-B
SHOWING REINFORCEMENT FOR FRONT FACE

MK	No. Req'd.	A	B	C	D	E
401	5	8"	Av. 6'-2"	9½"	Av. 1'-½"	8"
402	4	8"	5'-6"	9½"	Av. 1'-½"	8"
501	4	11"	Av. 3'-8"	9½"	Av. 1'-1"	11"
502	4	11"	5'-7"	9½"	Av. 1'-1"	11"
405	6	8"	Av. 5'-6"	9½"	Av. 1'-½"	8"
406	6	8"	5'-0"	9½"	Av. 1'-½"	8"
503	5	11"	Av. 3'-3"	9½"	Av. 1'-1"	11"
504	5	11"	5'-0"	9½"	Av. 1'-1"	11"
505	4	11"	Av. 3'-11"	9½"	Av. 1'-1"	11"
506	3	11"	5'-4"	9½"	Av. 1'-1"	11"
410	4	8"	Av. 3'-10"	9½"	Av. 1'-½"	8"
411	3	8"	5'-10"	9½"	Av. 1'-½"	8"
507	3	11"	Av. 3'-1"	9½"	Av. 1'-1"	11"
508	3	11"	4'-11"	9½"	Av. 1'-1"	11"

Av. 7'-10"
Varies 5'-2" to 10'-6"
MK 330
9 Required

Av 7'-9"
MK 331
12 Required

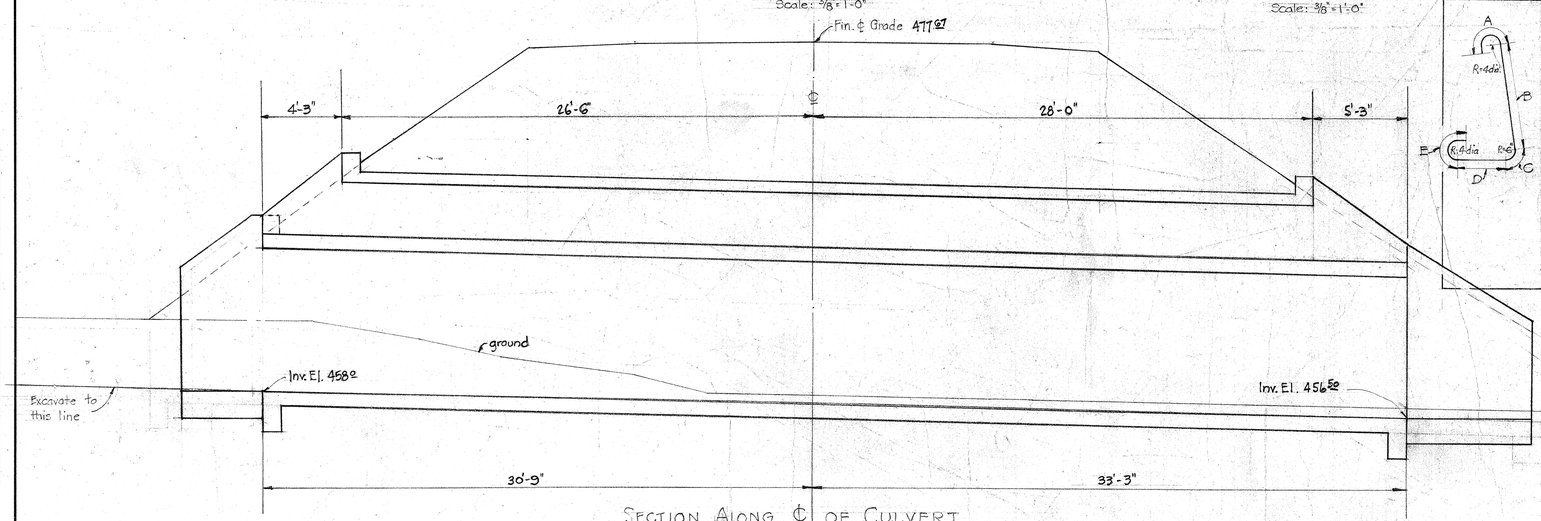

SECTION ALONG ℄ OF CULVERT
Scale: 1/4" = 1'-0"

ORIGINAL PLAN	
	SURVEY PLOTTED BY
	DESIGNED BY W.R. BARTELS
	DRAWN BY " "
	TRACED BY H.H. CHANG
NOTE BOOK	QUANTITIES BY " "
	QUANTITIES CHECKED BY " "
No.	CHECKED BY " "
	DATE Aug. 46

TERRITORIAL HIGHWAY DEPARTMENT
TERRITORY OF HAWAII

4x3 & 8x8 COMBINATION
CONCRETE BOX CULVERT
STA. 171+15 FAP 14-B(1)

Scale: As Noted — Sept. 14, 1940

SHEET № 1 OF 2 SHEETS

5039.27

26

FED. ROAD DIST. NO.	STATE	FED. AID PROJ. NO.	FISCAL YEAR	SHEET NO.	TOTAL SHEETS
HAWAII	HAW.	14-B(1)	1941	28	92

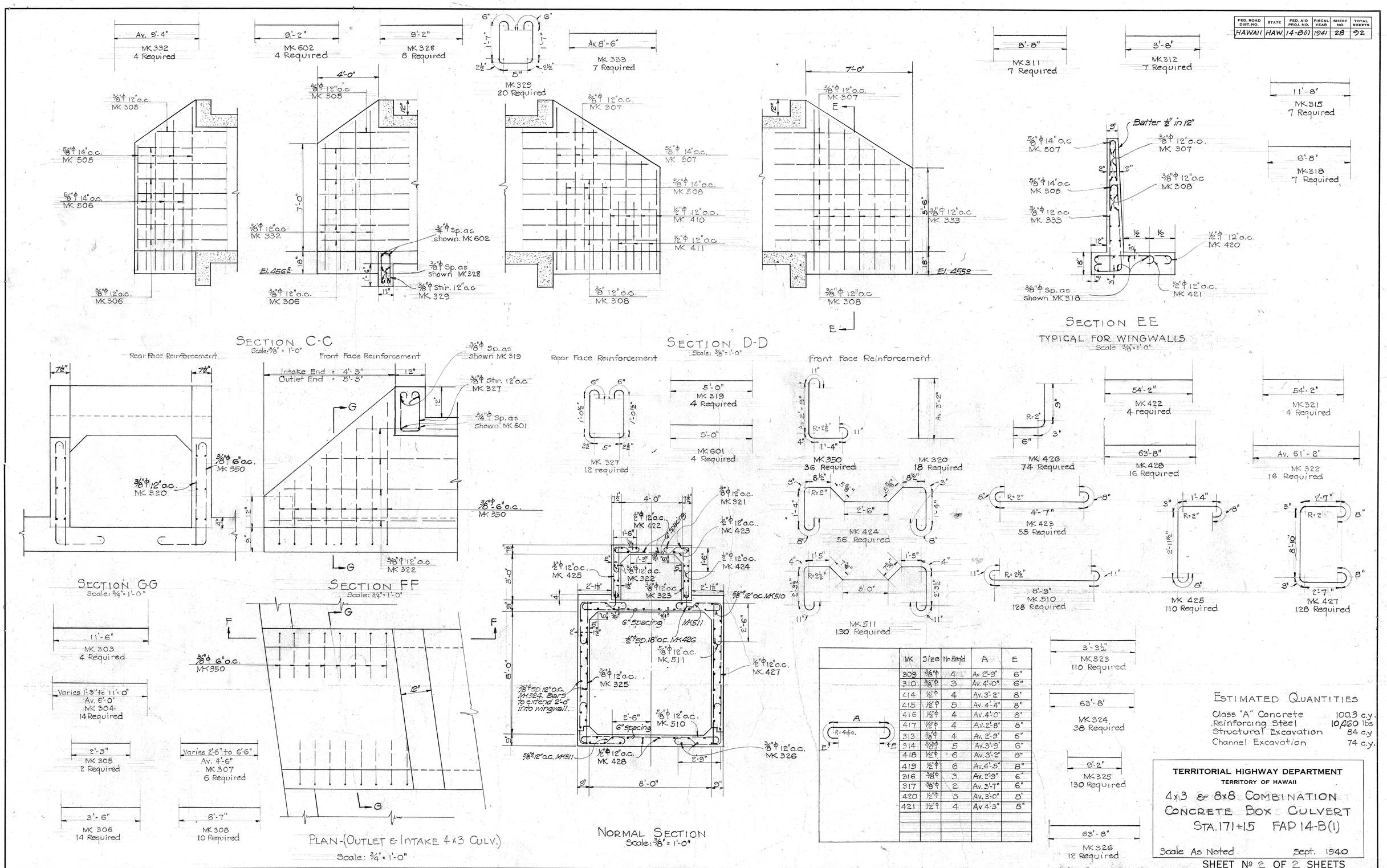

MK	Size	No Req'd	A	E
309	3/8"φ	4	Av 2'-9"	6"
310	3/8"φ	3	Av. 4'-0"	6"
414	1/2"φ	4	Av. 3'-2"	8"
415	1/2"φ	5	Av. 4'-4"	8"
416	1/2"φ	4	Av. 4'-0"	8"
417	1/2"φ	4	Av. 2'-8"	8"
313	3/8"φ	4	Av. 2'-9"	6"
314	3/8"φ	5	Av. 3'-9"	6"
418	1/2"φ	6	Av. 3'-2"	8"
419	1/2"φ	6	Av. 4'-5"	8"
316	3/8"φ	3	Av. 2'-9"	6"
317	3/8"φ	2	Av. 3'-7"	6"
420	1/2"φ	3	Av. 3'-0"	8"
421	1/2"φ	4	Av 4'-3"	8"

Estimated Quantities

Class "A" Concrete	100.3 c.y.
Reinforcing Steel	10,460 lbs
Structural Excavation	84 c.y
Channel Excavation	74 c.y.

TERRITORIAL HIGHWAY DEPARTMENT
TERRITORY OF HAWAII

4x3 & 8x8 COMBINATION CONCRETE BOX CULVERT
STA. 171+15 FAP 14-B(1)

Scale As Noted — Sept. 1940

SHEET № 2 OF 2 SHEETS

ORIGINAL PLAN	SURVEY PLOTTED BY	DATE
	DESIGNED BY	
	DRAWN BY	
	TRACED BY	
NOTE BOOK	QUANTITIES BY	
	QUANTITIES CHECKED BY	
No.	CHECKED BY	

5039.28

27

FED. ROAD DIST. NO.	STATE	FED. AID PROJ. NO.	FISCAL YEAR	SHEET NO.	TOTAL SHEETS
HAWAII	HAW.	F.A.P. 14B	1961	28A	92

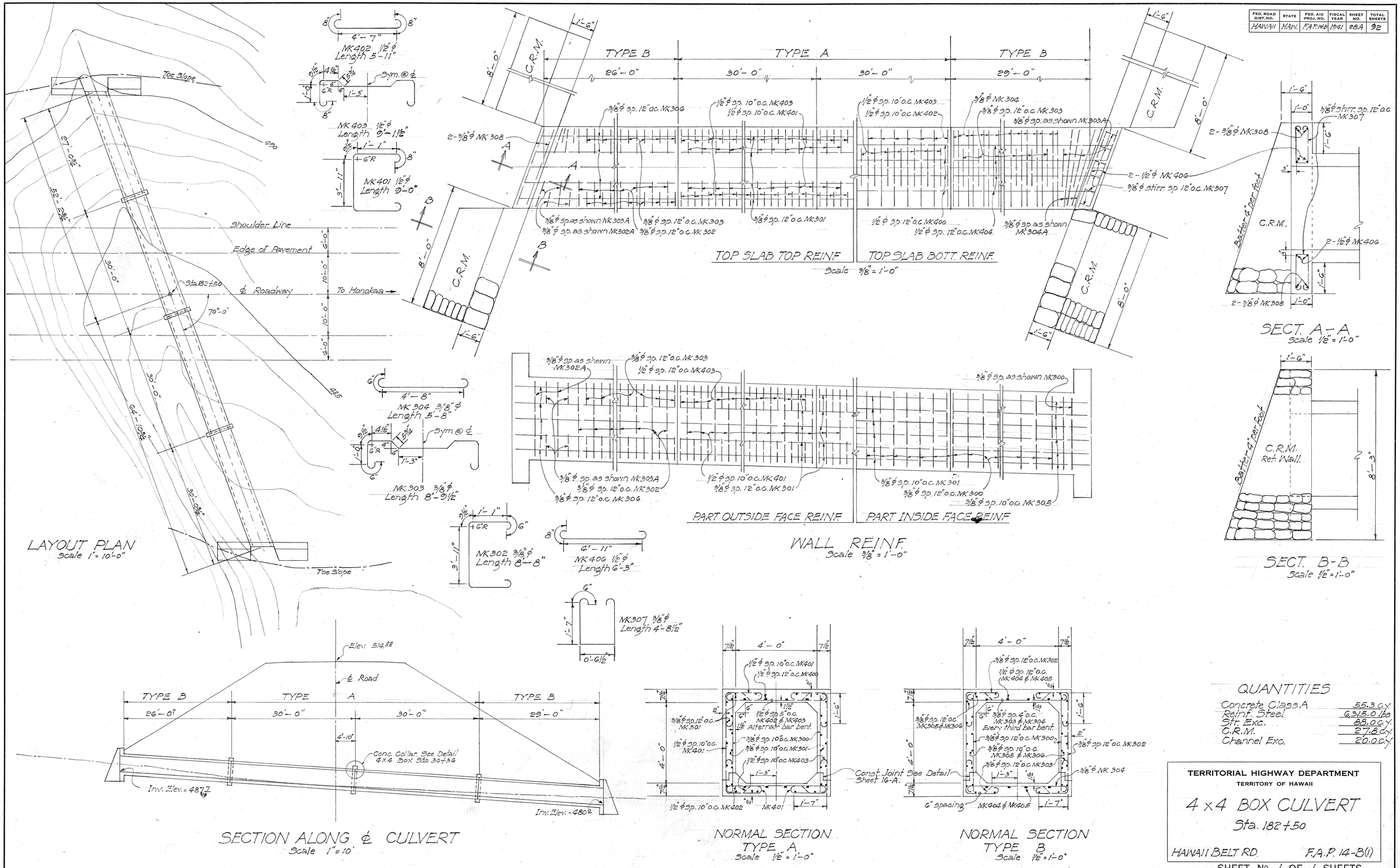

QUANTITIES

Concrete Class A	55.3 c.y.
Reinf. Steel	6,315.0 lbs
Str. Exc.	88.0 c.y.
C.R.M.	27.8 c.y.
Channel Exc.	20.0 c.y.

TERRITORIAL HIGHWAY DEPARTMENT
TERRITORY OF HAWAII

4 x 4 BOX CULVERT

Sta. 182+50

HAWAII BELT RD. F.A.P. 14-B(1)

SHEET № 1 OF 1 SHEETS

ORIGINAL PLAN		DATE
	SURVEY PLOTTED BY	
	DESIGNED BY	
	DRAWN BY	
	TRACED BY	
NOTE BOOK	QUANTITIES BY	
	QUANTITIES CHECKED BY	
No.	CHECKED BY	

5039.28A

FED. ROAD DIST. NO.	STATE	FED. AID PROJ. NO.	FISCAL YEAR	SHEET NO.	TOTAL SHEETS
HAWAII	HAW	14B	1941	29	92

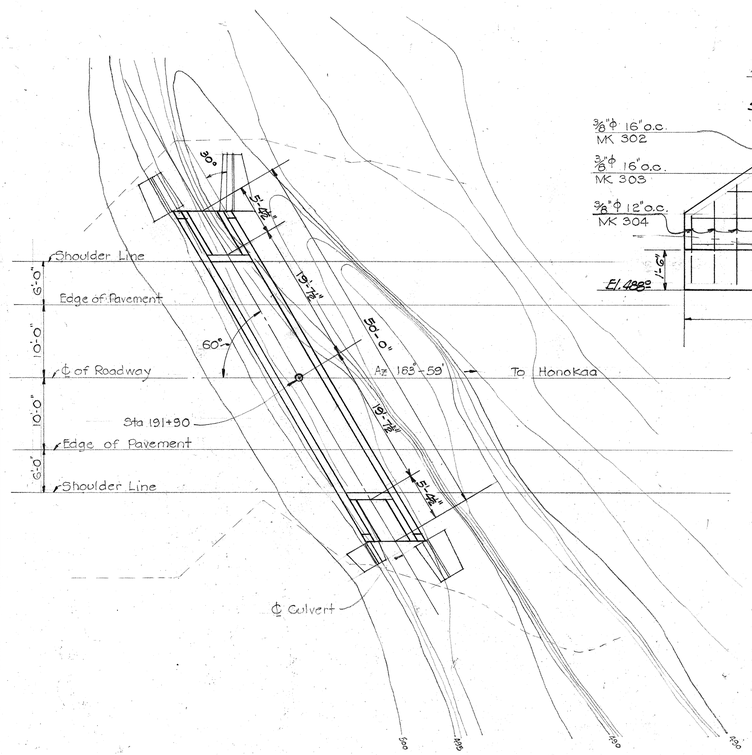

PLAN
Scale: 1"=10'

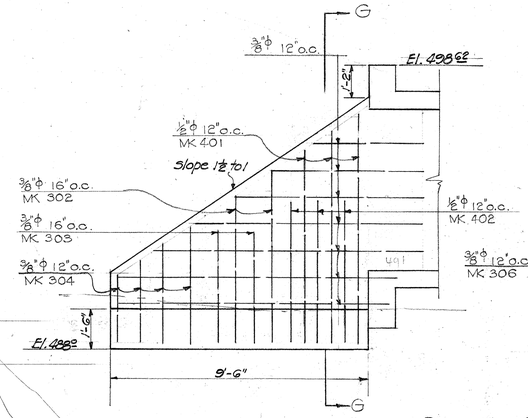

REAR FACE REINFORCEMENT

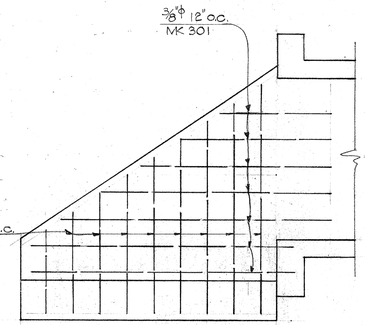

FRONT FACE REINFORCEMENT

SECTION C-C
Scale: ⅜"=1'-0"

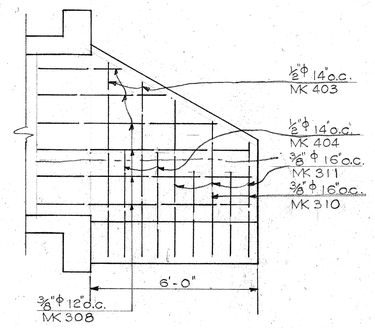

REAR FACE REINFORCEMENT

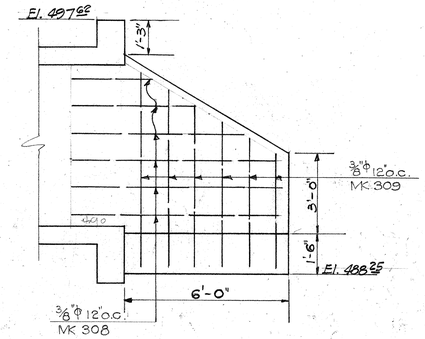

FRONT FACE REINFORCEMENT

SECTION D-D
Scale: ⅜"=1'-0"

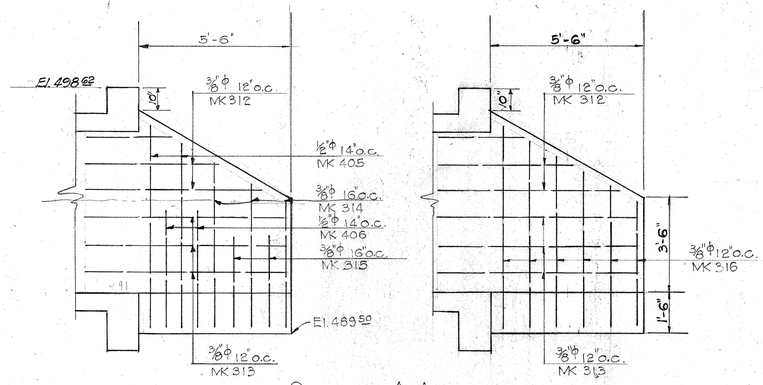

REAR FACE REINFORCEMENT

SECTION A-A
Scale: ⅜"=1'-0"

FRONT FACE REINFORCEMENT

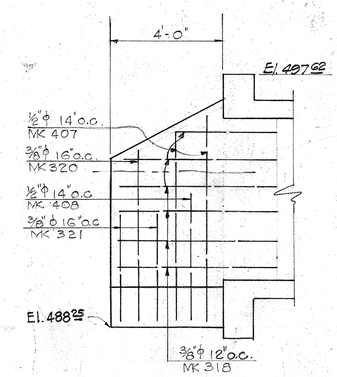

REAR FACE REINFORCEMENT

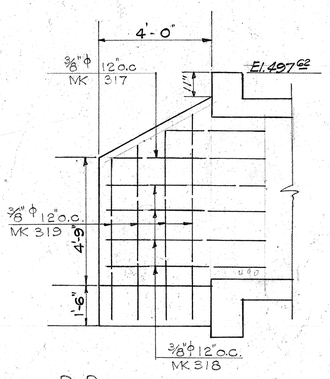

SECTION B-B
Scale: ⅜"=1'-0"

FRONT FACE REINFORCEMENT

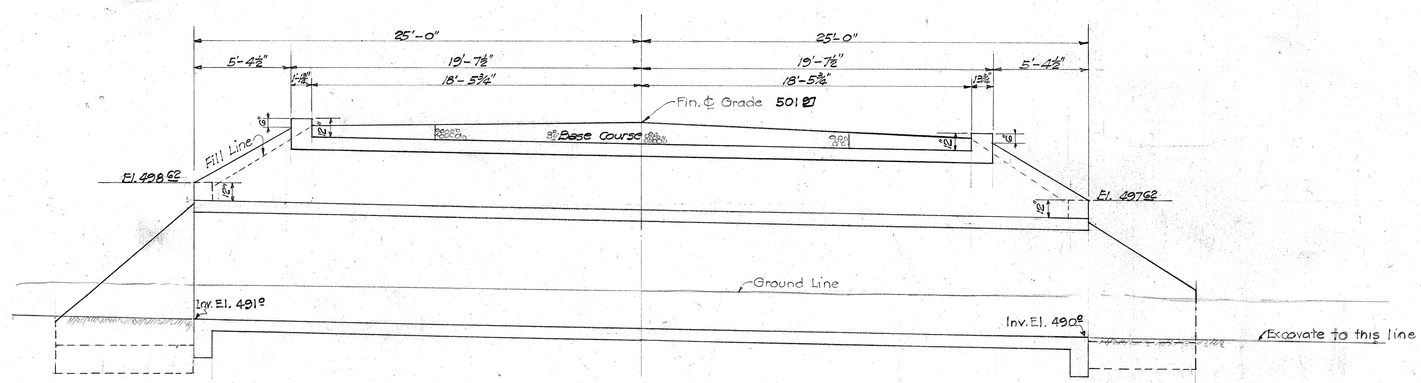

SECTION ALONG ℄ OF CULVERT
Scale: ¼"=1'-0"

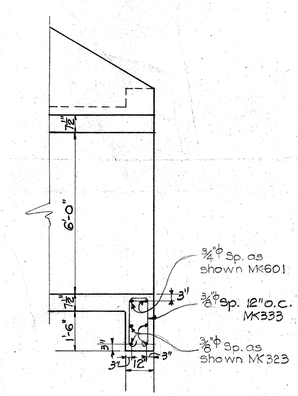

SECTION THRU 6×6 CULVERT
SHOWING STEEL REINFORCEMENT
FOR CURTAIN WALLS (INTAKE & OUTLET ENDS)

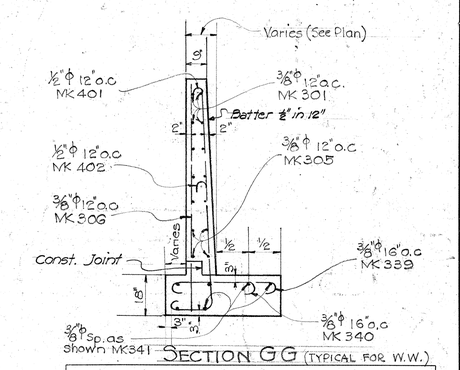

SECTION GG (TYPICAL FOR W.W.)

TERRITORIAL HIGHWAY DEPARTMENT
TERRITORY OF HAWAII

4×3 & 6×6 COMBINATION
CONCRETE BOX CULVERT
STA. 191+90 FAP 14-B(1)

Scale: As Noted — Oct. 1940

SHEET № 1 OF 2 SHEETS

ORIGINAL PLAN		
	SURVEY PLOTTED BY	DATE Aug. '40
	DESIGNED BY W.W.H.	" "
	DRAWN BY	" "
	TRACED BY	" "
NOTE BOOK	QUANTITIES BY J.H.G.	" " Jan. '41
	QUANTITIES CHECKED BY	" "
No.	CHECKED BY	" "

5039.29

28

FED. ROAD DIST. NO.	STATE	FED. AID PROJ. NO.	FISCAL YEAR	SHEET NO.	TOTAL SHEETS
HAWAII	HAW	14-B	1961	29A	92

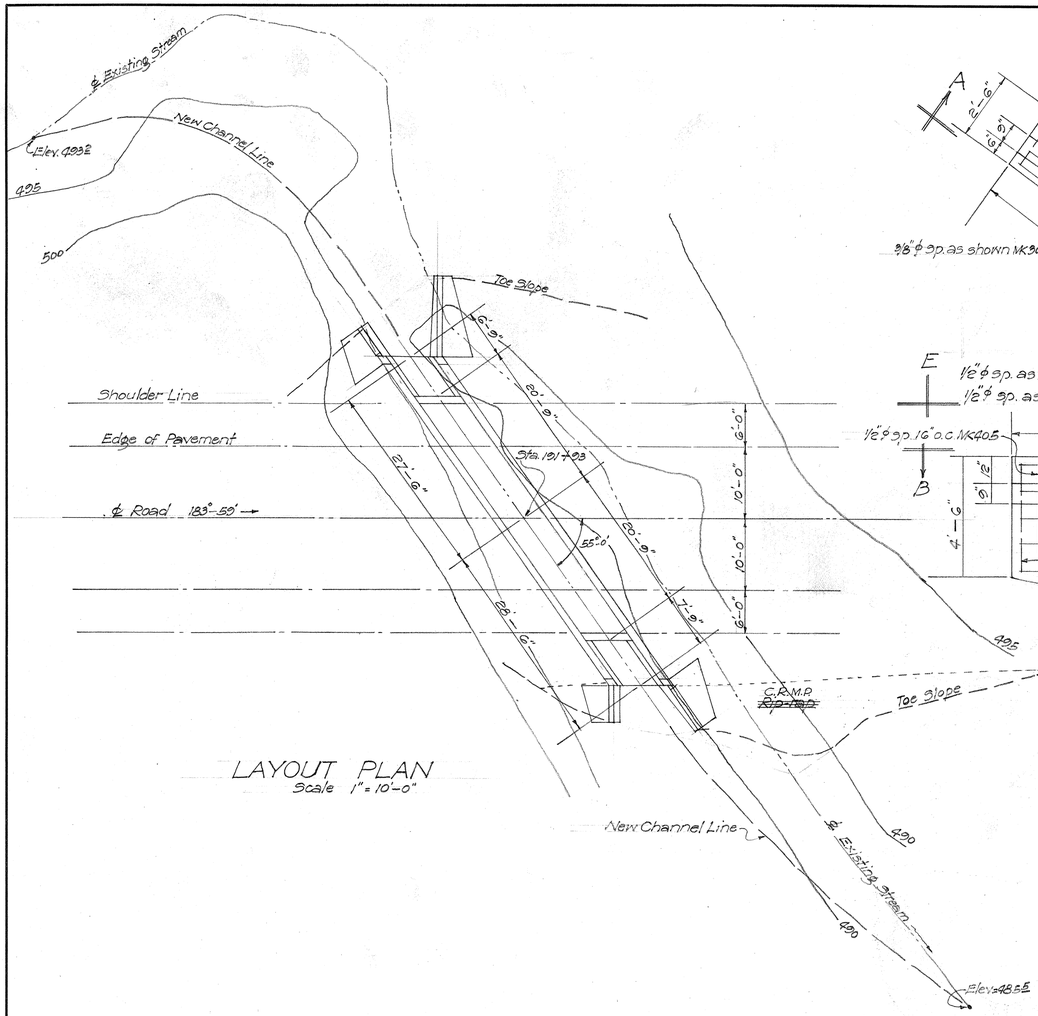

LAYOUT PLAN
Scale 1" = 10'-0"

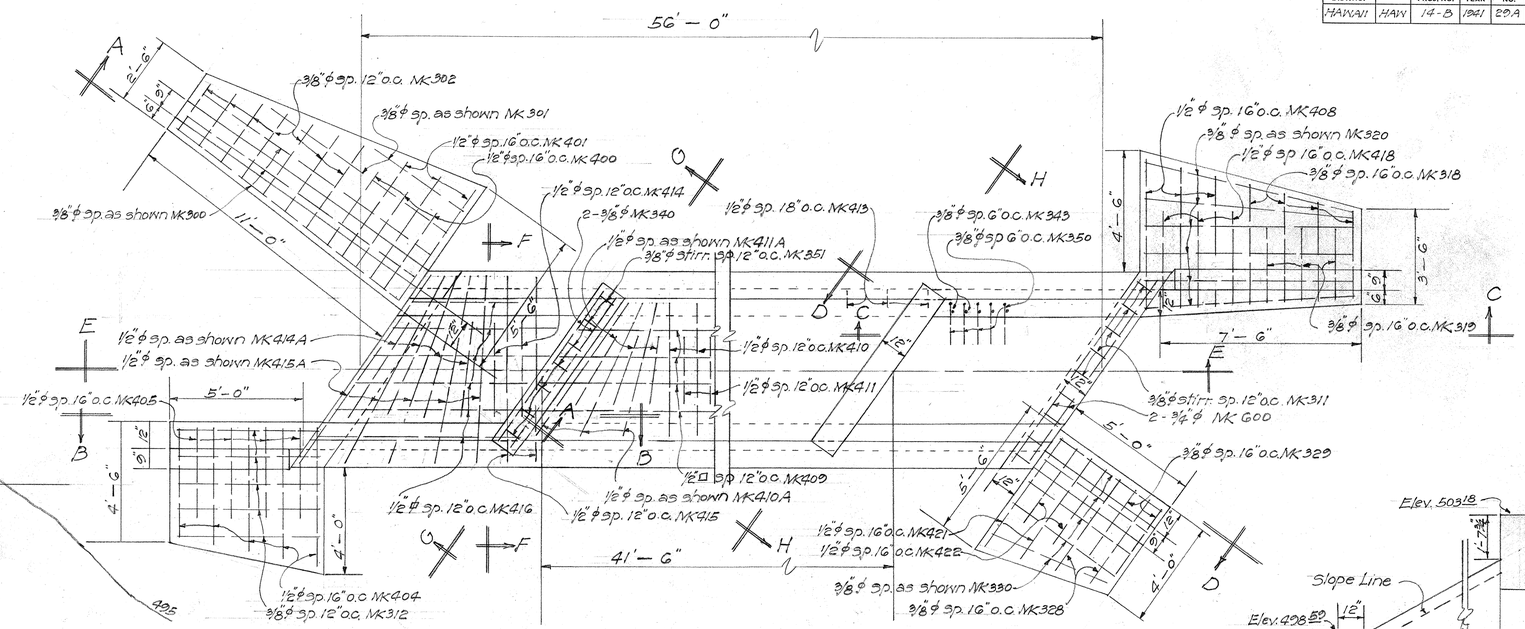

PART SLAB BOTTOM & W.W. FOOTING REINF.
Scale 3/8" = 1'-0"

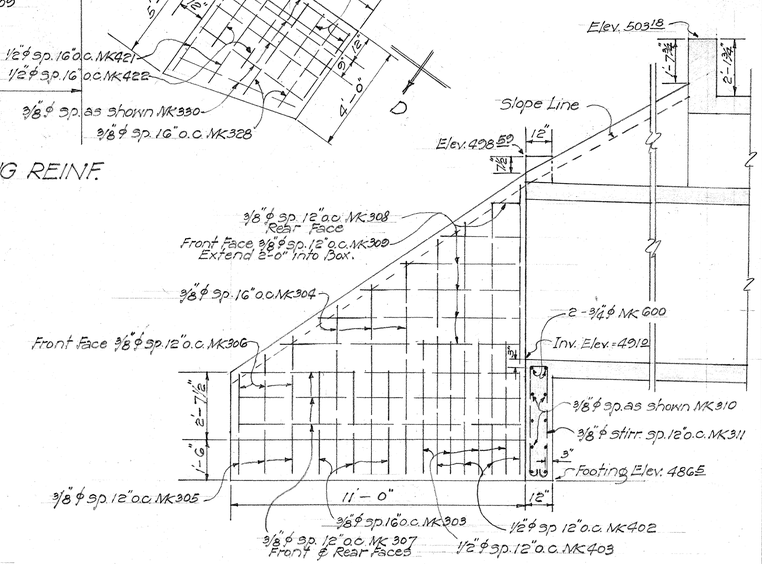

SECTION A-A
Scale 3/8" = 1'-0"

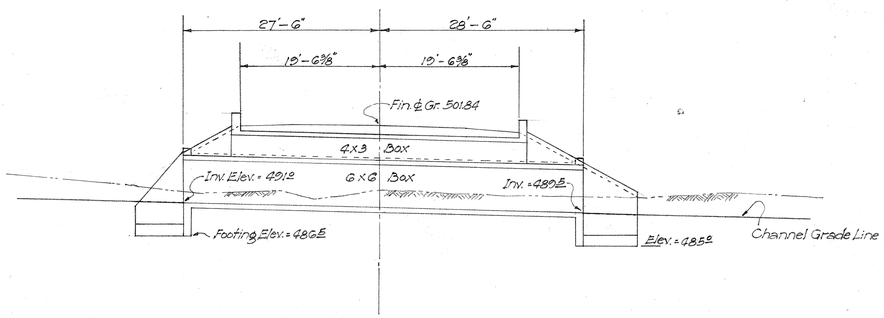

SECTION ALONG ℄ CULVERT
Scale 1" = 10'-0"

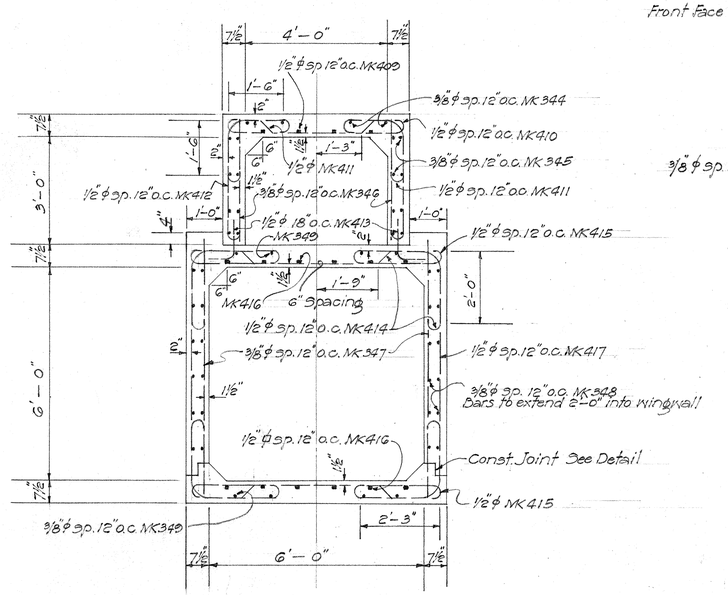

NORMAL SECTION
Scale 1/2" = 1'-0"

ORIGINAL PLAN	SURVEY PLOTTED BY	DATE
	DESIGNED BY	
	DRAWN BY	
	TRACED BY	
NOTE BOOK	QUANTITIES BY	
No.	QUANTITIES CHECKED BY	
	CHECKED BY	

TERRITORIAL HIGHWAY DEPARTMENT
TERRITORY OF HAWAII

4x3 & 6x6 COMBINATION BOX CULVERT

STA. 191 + 93

HAWAII BELT RD. F.A.P. 14-B

SHEET № 1 OF 2 SHEETS

5039.29A

FED. ROAD DIST. NO.	STATE	FED. AID PROJ. NO.	FISCAL YEAR	SHEET NO.	TOTAL SHEETS
AA W011	HAW	14 B	1941	30	92

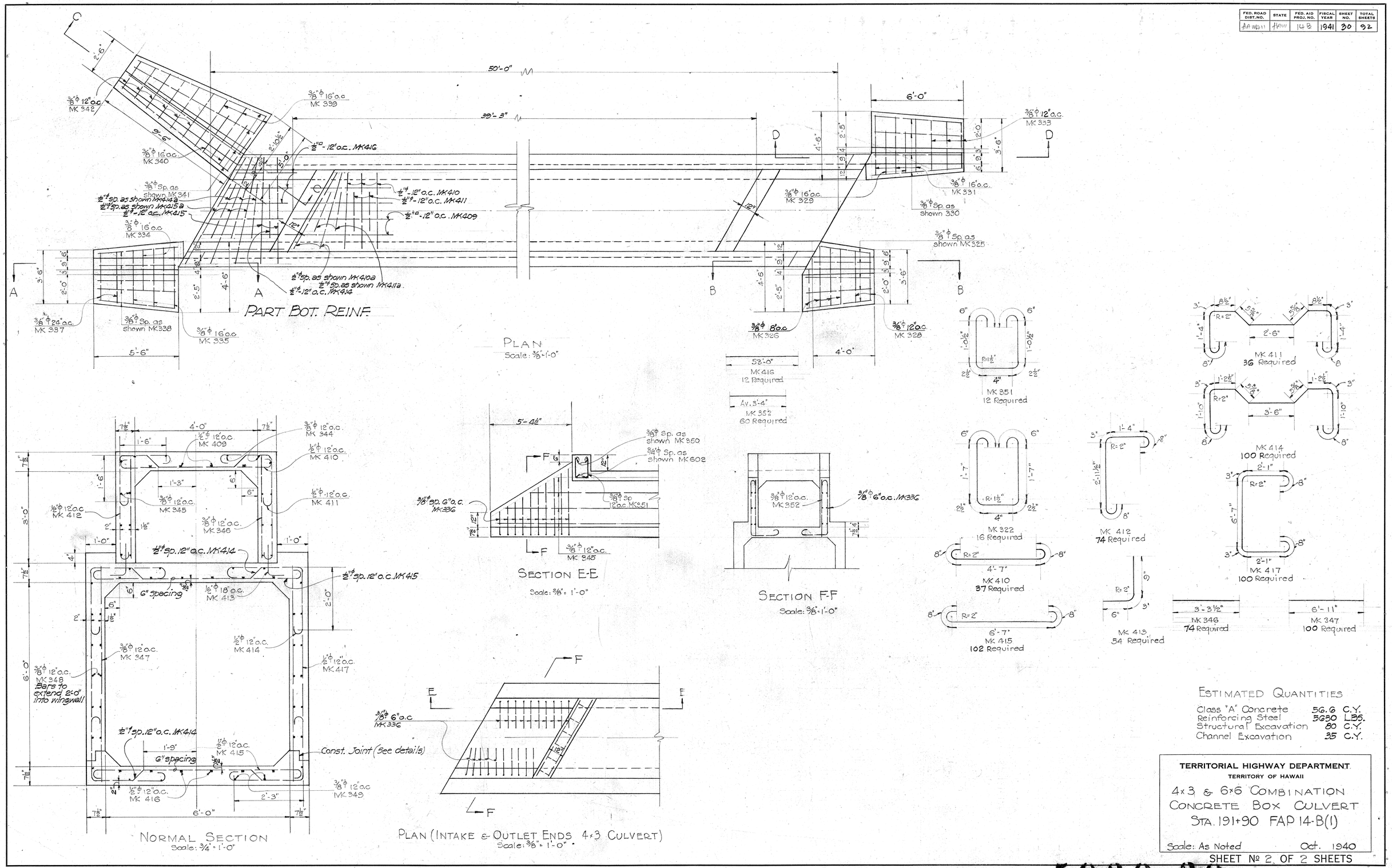

Estimated Quantities

Class "A" Concrete	56.6	C.Y.
Reinforcing Steel	5630	LBS.
Structural Excavation	80	C.Y.
Channel Excavation	35	C.Y.

TERRITORIAL HIGHWAY DEPARTMENT
TERRITORY OF HAWAII

4×3 & 6×6 COMBINATION CONCRETE BOX CULVERT
STA. 191+90 FAP 14-B(1)

Scale: As Noted — Oct. 1940

SHEET № 2 OF 2 SHEETS

ORIGINAL PLAN		
	SURVEY PLOTTED BY	DATE
	DESIGNED BY	" "
	DRAWN BY	" "
	TRACED BY	" "
NOTE BOOK	QUANTITIES BY	" "
	QUANTITIES CHECKED BY	" "
No.	CHECKED BY	" "

5039.30

FED. ROAD DIST. NO.	STATE	FED. AID PROJ. NO.	FISCAL YEAR	SHEET NO.	TOTAL SHEETS
HAWAII	HAW	14-B	1941	30A	92

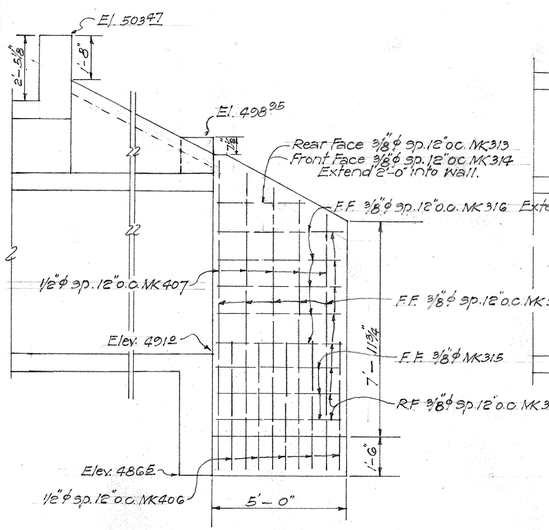

SECTION B-B
Scale 3/8" = 1'-0"

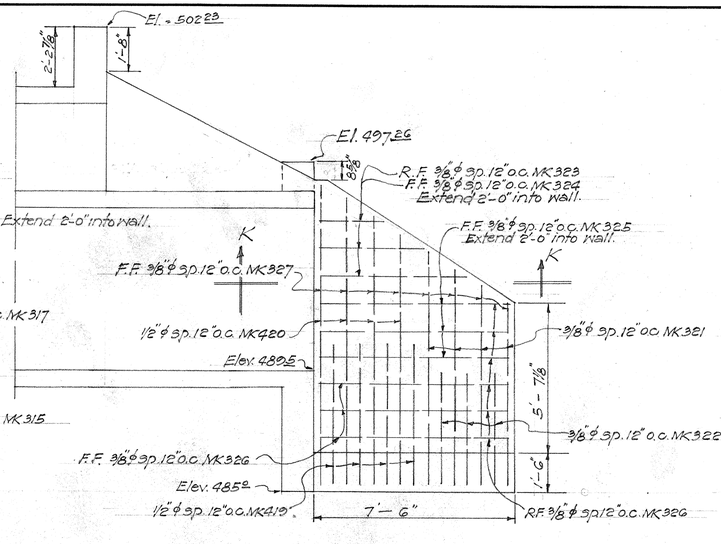

SECTION C-C
Scale 3/8" = 1'-0"

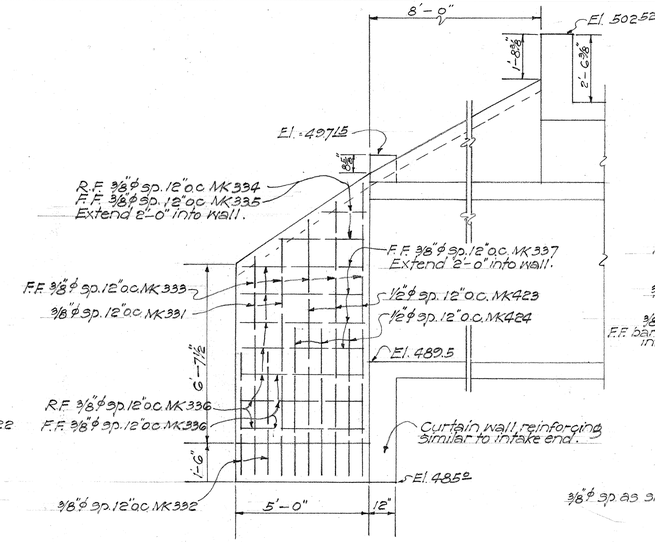

SECTION D-D
Scale 3/8" = 1'-0"

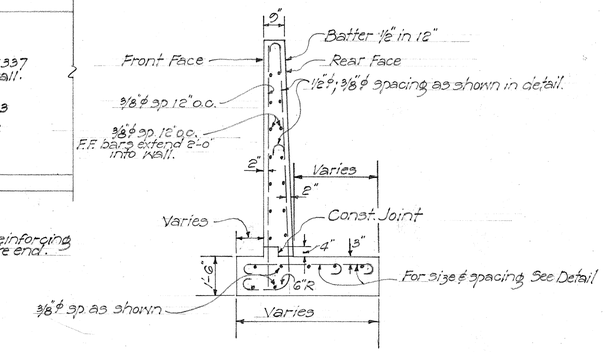

WINGWALL SECTION
Scale 3/8" = 1'-0"

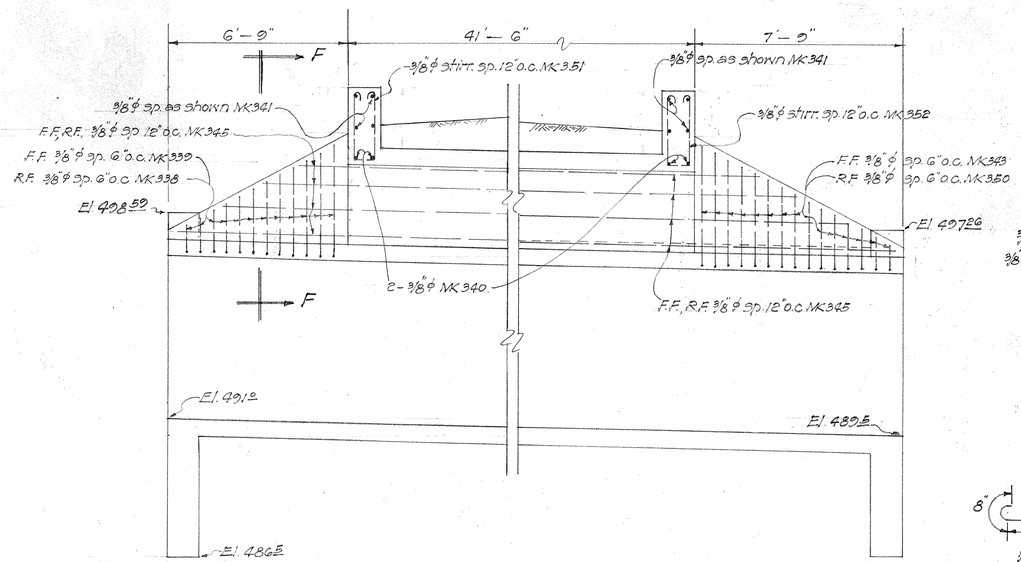

SECTION E-E
Scale 3/8" = 1'-0"

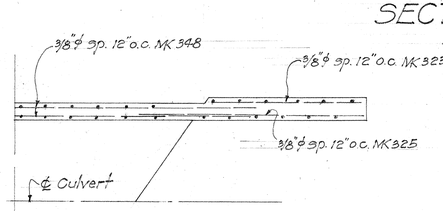

SECTION K-K
Scale 3/8" = 1'-0"

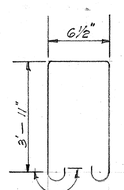

3/8"ϕ MK311
Length 9'-4 1/2"

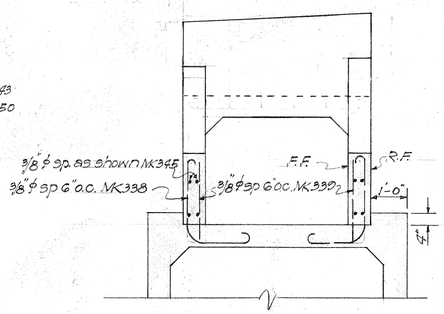

SECTION F-F
Scale 1/2" = 1'-0"

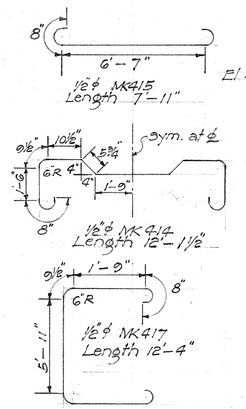

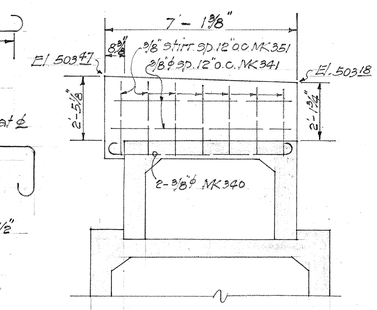

SECTION G-G
Scale 3/8" = 1'-0"

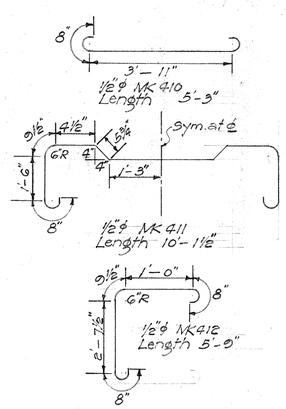

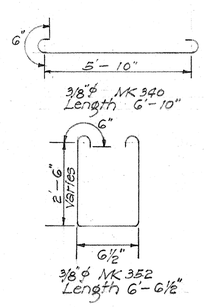

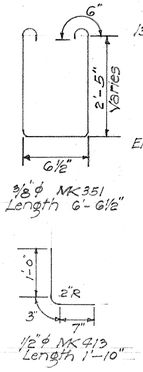

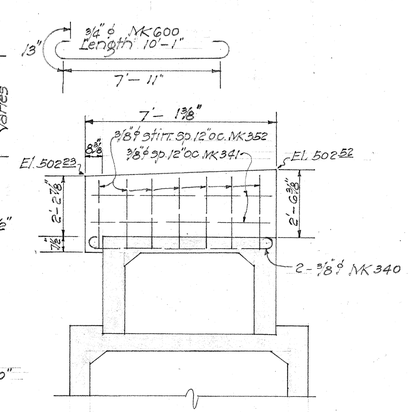

SECTION H-H
Scale 3/8" = 1'-0"

QUANTITIES

Class "A" Concrete	68.5 C.Y.
Reinf. Steel	6,575.0 lbs.
Str. Exc.	106.0 C.Y.
Channel Exc.	70.0 C.Y.
~~Rip-Rap~~ C.R.M.P.	19.0 C.Y.

TERRITORIAL HIGHWAY DEPARTMENT
TERRITORY OF HAWAII

4x3 & 6x6 COMBINATION BOX CULVERT

STA. 191 + 93

HAWAII BELT RD. F.A.P. 14-B

SHEET № 2 OF 2 SHEETS

ORIGINAL PLAN		
	SURVEY PLOTTED BY	DATE
	DESIGNED BY K. Okamoto	July 1941
	DESIGN CHECKED BY E.Y.	" " "
	TRACED BY E.Y.	July 1941
NOTE BOOK	QUANTITIES CHECKED BY Y. Iwamoto	July 1941
No.	CHECKED BY	" " "

5039.30A