FED. ROAD DIST. NO.	STATE	PROJ. NO.	FISCAL YEAR	SHEET NO.	TOTAL SHEETS
HAWAII	HAW.	11N-01-03	2004	7	14

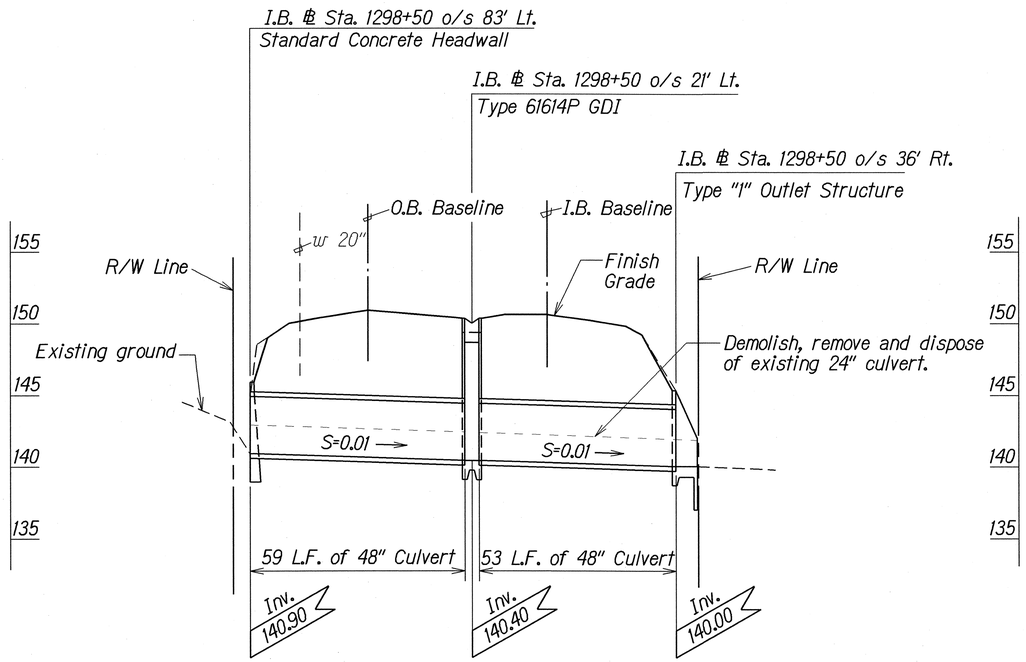

℄ PROFILE - 48" CULVERT AT I.B. ℄ STA. 1298+50

Scale: Hori. 1"=20'
Vert. 1"=5'

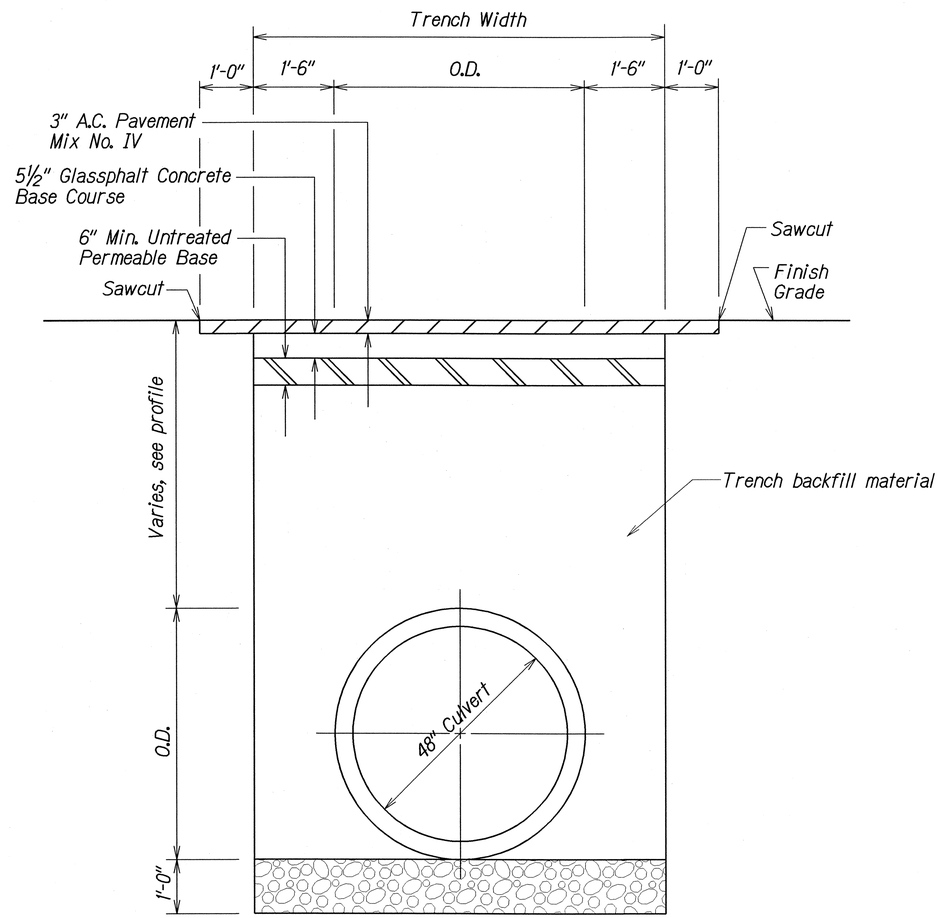

TYPICAL DETAILS OF CULVERT TRENCH AND PAVEMENT RESTORATION

Scale: ¾"=1'-0"

ORIGINAL PLAN
SURVEY PLOTTED BY
DRAWN BY J.R.C.
TRACED BY
DESIGNED BY C.H. & B.H.
QUANTITIES BY
CHECKED BY
DATE
NOTE BOOK
dn/cad/hawaii/
3-25-2004

STATE OF HAWAII
DEPARTMENT OF TRANSPORTATION
HIGHWAYS DIVISION

DRAINAGE PROFILE

KANOELEHUA AVE. DRAINAGE IMPROVEMENTS
Vicinity of Palai Stream
Project No. 11N-01-03

Scale: As Noted Date: Mar. 2004

SHEET No. H2 OF H4 SHEETS